VFD 101
Lesson 3

Parts of a Variable Frequency Drive (VFD)

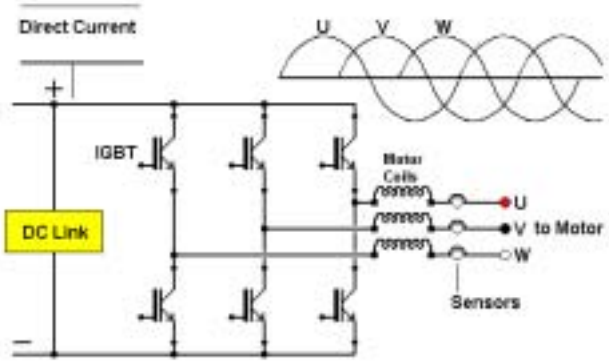

This lesson covers the parts that make up the Variable Frequency Drive (VFD) and describes the basic operation of each part.

Here is the basics outline for this lesson.

Outline:

Parts and Operations of a Drive

1. VFD part of a Larger System
2. Rectifier
3. Soft Charge Circuit
4. Intermediate Circuit (DC Link)
5. Brake Circuit
6. Inverter
7. Pulse Width Modulation
8. Control & Regulation Section

Note: Other names are used for this device, such as Adjustable Frequency Drive (AFD), Variable Speed Drive (ASD), Frequency Converter and Inverter, but Variable Frequency Drive (VFD) or just Drive is used throughout this lesson.

VFD 101
Lesson 3

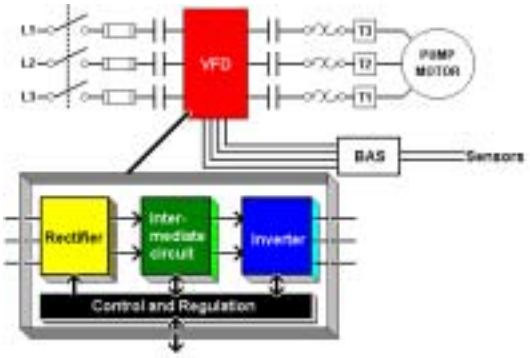

This lesson covers the basic parts and operation of a Variable Frequency Drive (VFD). These parts are divided into 4 sections: Rectifier, Intermediate circuit (DC Link), Inverter and Control & Regulation.

1. VFD in a Larger System

This section covers the parts and operation of the Variable Frequency Drive (VFD). It is important to keep in mind that the Drive is just one part of a system. In the diagram above, notice the disconnect switch, fuses, bypass switch, thermal overloads, BAS, etc. all play an important part in making an application work correctly.

Inside the VFD there are 4 major sections: rectifier, intermediate circuit (DC Link), inverter and control/regulation. This fourth section, control and regulation, interfaces with the other 3 sections.

In very general terms the operation of the drive is as follows. Power first goes into the rectifier, where the 3-phase AC is converted into a rippling DC voltage. The intermediate circuits then smoothes and holds the DC Voltage at a constant level or energy source for the inverter. The last section, the inverter, uses the DC voltage to pulse the motor with varying levels of voltage and current depending upon the control circuit. The pattern of the pulses going to the motor makes it appear similar to an AC sinusoidal waveform.

Each one of these sections is reviewed in some detail in the pages that follow.

To understand the parts of an VFD better, an example of a 450kW (600Hp) drive is used.

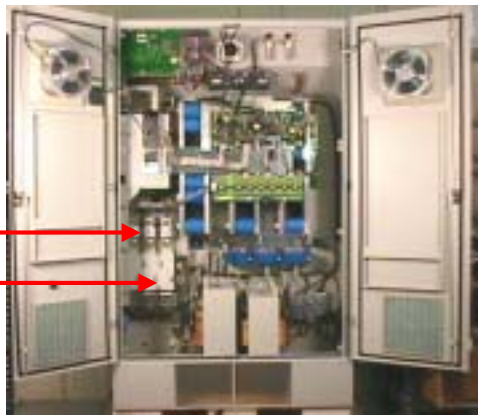

In the picture notice the fuses and disconnect switch.

As each part is explained pictures of these parts on a 450kW (600Hp) drive are displayed. This large drive is used in this lesson for the size of the parts are easy to identify.

One of the options for these large drives 315 – 450kW (350 – 600Hp) is to have fuses and a disconnect switch mounted inside the drive. With smaller size drives fuses and a disconnect are separate but are still part of the overall system as described on the previous page.

2) Rectifier Section

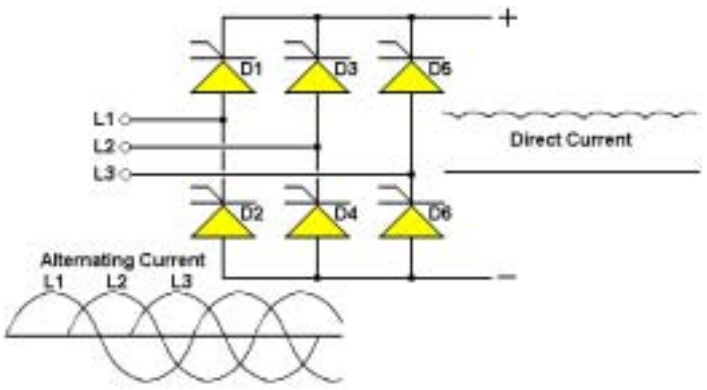

Its function is to change 3-phase AC into DC.

2. Rectifier

The 3-phase AC voltage goes into the rectifier section which is made up of a group of gated diodes (silicon rectifiers or SCRs). In most VFDs, these diodes are in a group of 6 as diagramed above. One VFD manufacturer has stressed that there should be more sets of diodes, 12, 18, even 24. Reasons for/against this are covered in lesson 5.

Diodes (D1 through D6) allow current to flow only in one direction when enabled by the gate signal. In this diagram, the AC power on L1 goes into Diodes D1 and D2. Because of the position of these diodes, current flow can only go up. The D1 diode conducts when the AC is positive and D2 conducts when the AC goes negative. This drives the top line (+) more positive and the bottom line (-) more negative. Diodes D3 and D4 convert L2 power to DC and Diodes D5 and D6 convert L3. A volt ohmmeter or VOM can be used to measure this DC voltage. In this type of circuit, the DC voltage is 1.35 times the AC line voltage.

If 240 Vac is coming in, 324 Vdc is generated.

If 380 Vac is coming in, 513 Vdc is generated.

If 460 Vac is the line voltage, 621 Vdc is generated.

If 575 Vac is the line voltage, 776 Vdc is generated.

Because of line (power coming in) and load (power to the motor) changes, the DC Voltage level is constantly moving above and below this expected value.

2) Rectifier Section

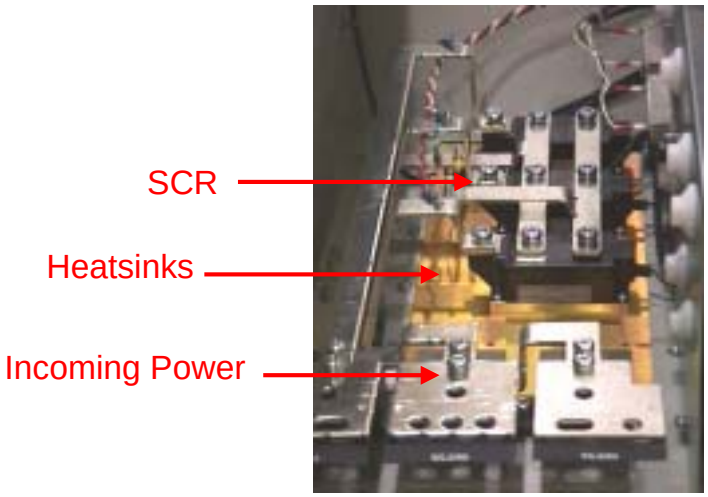

The Rectifier section contains terminals for incoming power, silicon rectifiers (SCR) and heatsinks

The picture above highlights the rectifier section of the drive. Six SCRs are used to change the incoming power from AC to DC. This rectification can generate a considerable amount of heat, so the SCRs are mounted onto a gold-colored heatsink. The fins of the heatsink are facing the other way inside a special ductwork where the air flow removes the heat. Four fans mounted across the top of this VFD pull the air across the heatsink. Remember that heat is the enemy both to the drive and to the motor. Any practice which makes either run cooler makes them last longer. Because of the high amperage (750A for this unit) there are bus bars connecting the rectifiers to the incoming power. Even the largest wire size is too small for this unit.

3) Soft Charge Circuit

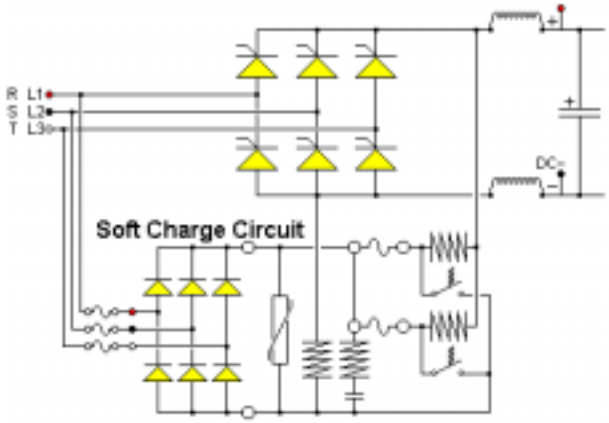

On large drives, 22kW (30Hp) and larger, a soft charge circuit is added in helping charge the cap banks before main power is applied to the rectifier.

3. Soft Charge Circuit

On larger drives, 22 – 450kW (30 – 600Hp), a part of the rectifier section is known as the soft charge circuit, which is used to power up the drive. With this circuit, when power is applied, the inrush of current is restricted going to the large capacitors in the DC Link, so that they may charge up slowly (within a couple of seconds). If this circuit was absent, line fuses would be blown every time the VFD was started. The soft charge circuit on some of the VFDs has a resistor or two in line with the current to slowly allow charging of the capacitors. This current resistor even has its own safety, a thermal switch, which shorts out if the current rush is too high in the soft charge circuit. The shorted thermal switch blows fuses on the soft charge circuit preventing the drive from starting.

Once main power is applied to the drive, the SCRs in the main rectifier section remain off. The much smaller rectifier section in the soft charge circuit starts, applying DC power through the current resistors charging up the capacitors in the DC Link. When these capacitors are charged to the DC voltage minimum value, the control section starts the firing of the SCRs in the main rectifier. Because of the amp draw through the current resistors in the soft charge circuit, time is needed to cool them off, so the 22 – 450kW (30 - 600 Hp) drives are limited to 2 start per minute.

3) Soft Charge Circuit

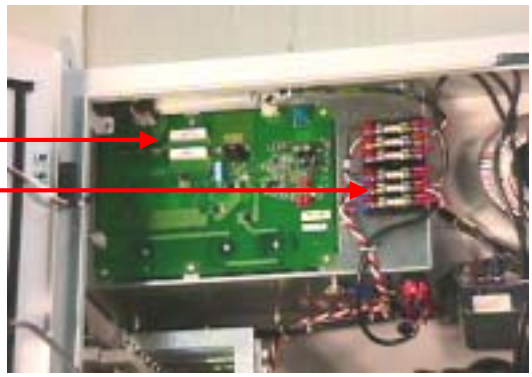

Here is a picture of the soft charge circuit in the 450kW (600Hp) drive.

In the picture above, the soft charge circuit card is shown. This circuit card on the 450kW (600Hp) drive is in the upper left corner, just above the rectifier section. Notice that the soft charge fuses are just to the right of the circuit card. The soft charge circuit card on the 315-450kW (350-600Hp) drives uses small IGBTs instead of resistors to limit power going to the capacitors. This is referred to as an active soft charge.

3) Soft Charge Circuit

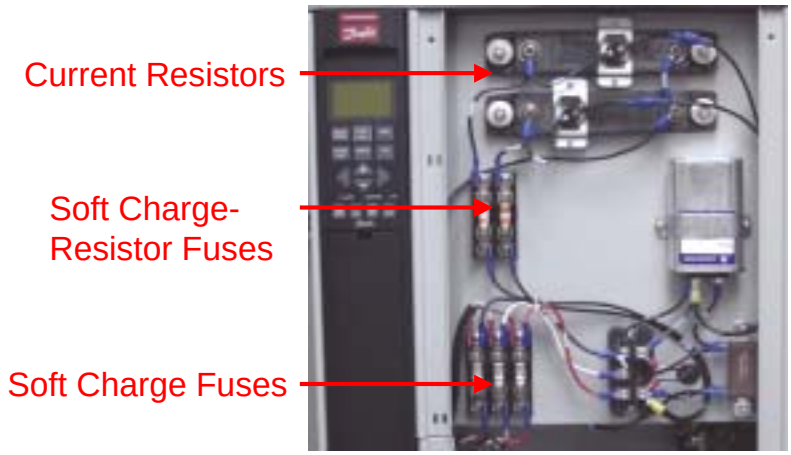

Soft charge circuit in the 160kW (200Hp) drive.

On the 160kW (200Hp) drive, shown above, the soft charge circuit is exactly like the schematic diagram shown on the previous page. Notice the 2 large black current limiting resistors used to limit power going to the capacitors in the DC Link section.

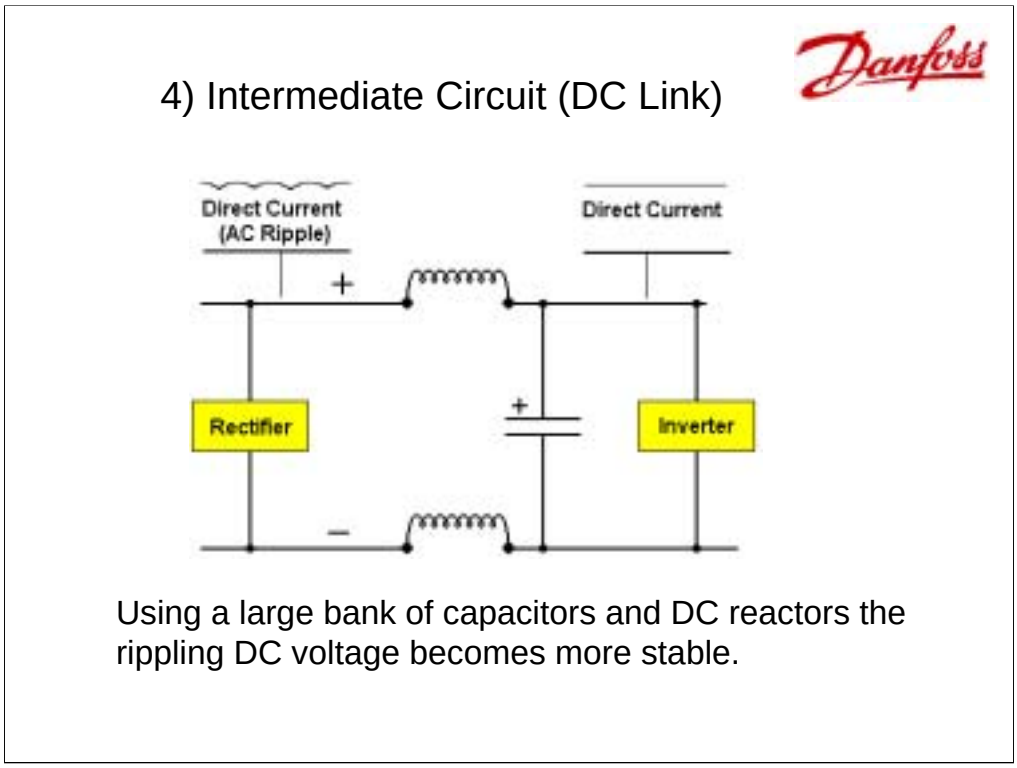

4. Intermediate Circuit (DC Link)

The Intermediate Circuit also known as a DC Link, can be seen as a power storage facility for the next section, the inverter section. There are 2 major components to the DC Link section, capacitors and coils. In the diagram above only one capacitor is shown but it is always a series of capacitors. With Danfoss VFDs, this intermediate section always uses DC coils also known as DC Line Reactors or DC chokes. For cost considerations, most other VFD manufacturers do not offer these DC Line Reactors as standard equipment. Danfoss regards these coils as essential for two main reasons; one is the ability to reduce harmonic noise (interference) by 40% and the other is the ability to ride through a temporary loss of power. This allows this drive to avoid numerous nuisance shut downs.

In the diagram above, notice that the rippled DC voltage coming in has now been filtered to a relatively constant voltage. Remember that this DC Link Voltage is 1.35 times the input voltage. The value of the DC Link voltage can be read from the display on the front of the drive. When ever working around the drive always be careful and give it a healthy respect. The largest drive produces 620Vdc at 750 A.

4) Intermediate Circuit (DC Link)

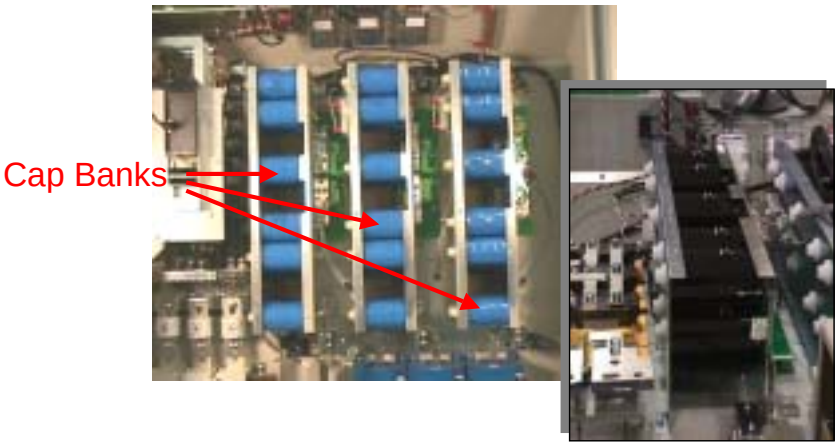

The blue capacitors banks (black on newer units) are a major part of the DC Link and store a great deal of energy.

When looking at a drive, some of the most striking components are the 2 devices that make up the DC link. The 3 banks of blue capacitors on the 450kW (600Hp) drive, shown on the left, are quite prominent. On newer units these blue capacitors have been replaced with black ones. They are in the center of the drive, just to the right of the rectifier section. There are 3 banks of 12 capacitors in each bank for a total of 36 capacitors. Capacitor numbers vary with each size of drive. This 3-bank arrangement is to allow for easier service. The plate on the right side of each capacitor bank has full voltage.

4) Intermediate Circuit (DC Link)

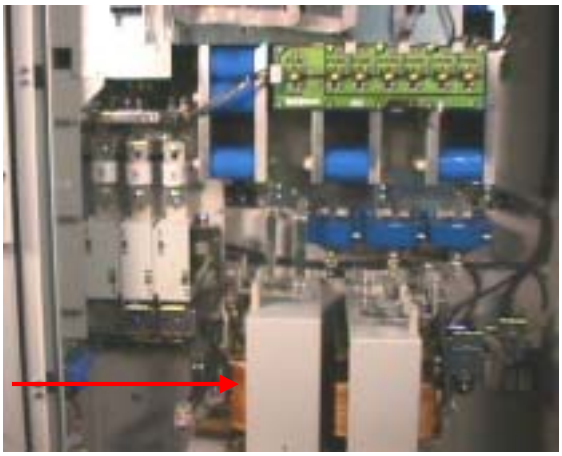

There are 2 sets of coils shown above. The DC Link coils are always the ones with 2 terminals, shown here on the left.

In the picture above there are 2 sets of coils. The coils on the left at the bottom center of the drive, the ones that have 2 connections (DC +, DC -) are the DC Coils, also know as DC Reactors or DC Chokes. The other set of coils to the right, with 3 terminal connections, are discussed in the pages that follow.

5) Brake Circuit

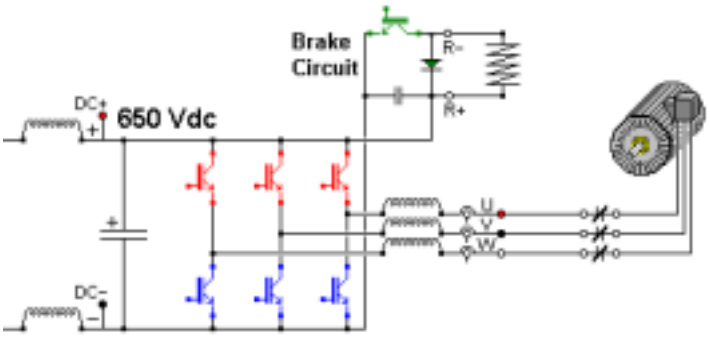

When drives are ordered with dynamic braking, the drive comes with Brake IGBTs. When the voltage gets too high on the DC Bus, the brake IGBT activates sending power to the brake resistor. This is NOT an option with HVAC drives.

5) Brake Circuit

This Brake Option, also known as Dynamic Braking, is used with devices that need to stop or change directions quickly, such as conveyors, hoists and centrifuges. On drives that have the brake option, an additional IGBT transistor is used to remove extra power coming back into the drive when the motor, which has a large inertia, is stopping or changing direction. The only HVAC related application that might use dynamic braking is for some fans for boiler combustion. This option is not required for the vast majority of HVAC applications.

6) Inverter Section

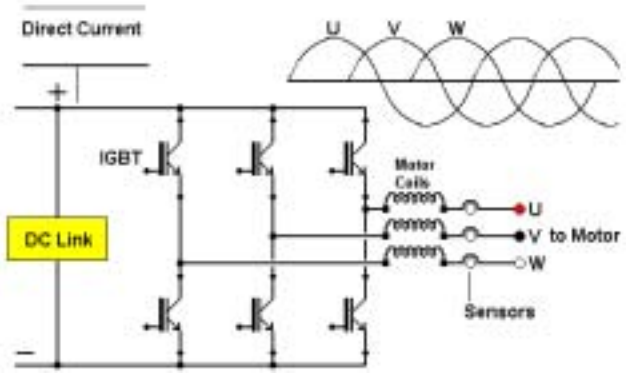

The Inverters take the voltage from the DC Bus and using Pulse Width Modulation (PWM) sends a signal which appears to the motor as an AC signal.

6) Inverter

The next part of the VFD is the Inverter section. This section takes the DC voltage from the intermediate section and, with the help of the control section, fires each set of IGBT (Insulated Gate Bipolar Transistors) to the U, V and W terminals of the motor. This firing of the IGBTs is known as Pulse Width Modulation (PWM) and is described in the next couple of slides.

Notice in the diagram above that sensors monitor the current going to each terminal of the 3-phase motor. Unlike some other manufacturers, Danfoss monitors all 3 phases continuously. There are some manufacturers, who in an attempt to cut costs, only have 2 sensors and guess on the output to the 3rd. There are others that only monitor the outputs when the first run command is given.

Another component that Danfoss insists on including are the motor coils on any drive larger than 18.5kW (25Hp). These coils smooth the waveform going to the motor. The smoother the waveform the less heat is generated at the motor and the longer the motor lasts. The standard distance used by Danfoss between its drive and the motor is 300m (1000 feet) using unshielded cable. There are other manufacturers that are limited to shorter distances 100m (330 feet) or less. Some end users have used distance as a sign of quality. The longer the distance, the better the drive.

6) Inverter Section

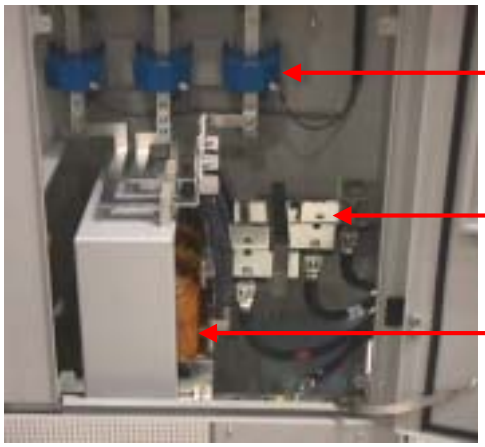

Motor coils, current sensors and motor terminals are located in the lower right corner of the 450kW (600Hp) drive.

The current sensors monitor the current going to the 3-phases of the motor. These sensors detect and alarm when a short circuit or grounded circuit is discovered. Some manufacturers only check for short circuits or grounding on the first run command, but Danfoss monitors for these faults all the time. This allows Danfoss to place a motor disconnect between the drive and the motor. If the motor is disconnected from the drive during operation, the drive might trip, but because of this constant monitoring, it suffers no damage.

A disconnect switch between the motor and drive is not allowed by many other manufacturer. If a disconnect switch is used on a few drives, it causes severe damage – in other words the smoke is let out.

6) Inverter Section

IGBTs

IGBT snubber card

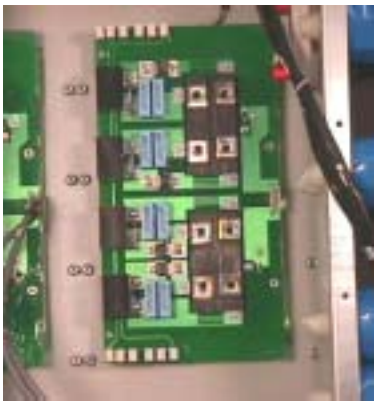

The inverters, IGBTs and snubber card, are mounted on heatsinks under each of the 3 cap banks.

The IGBTs are mounted on the heatsinks behind the capacitors in the middle of the 450kW (600Hp) drive. The picture on the right shows two IGBTs with the circuit card which is used to help control them, know as a snubber card. The picture on the left shows the IGBTs without the snubber card. The correct mounting pattern for the 6 screws (done in a rotating manner) on each is critical, so that there is proper contact between the IGBT and the heatsink.

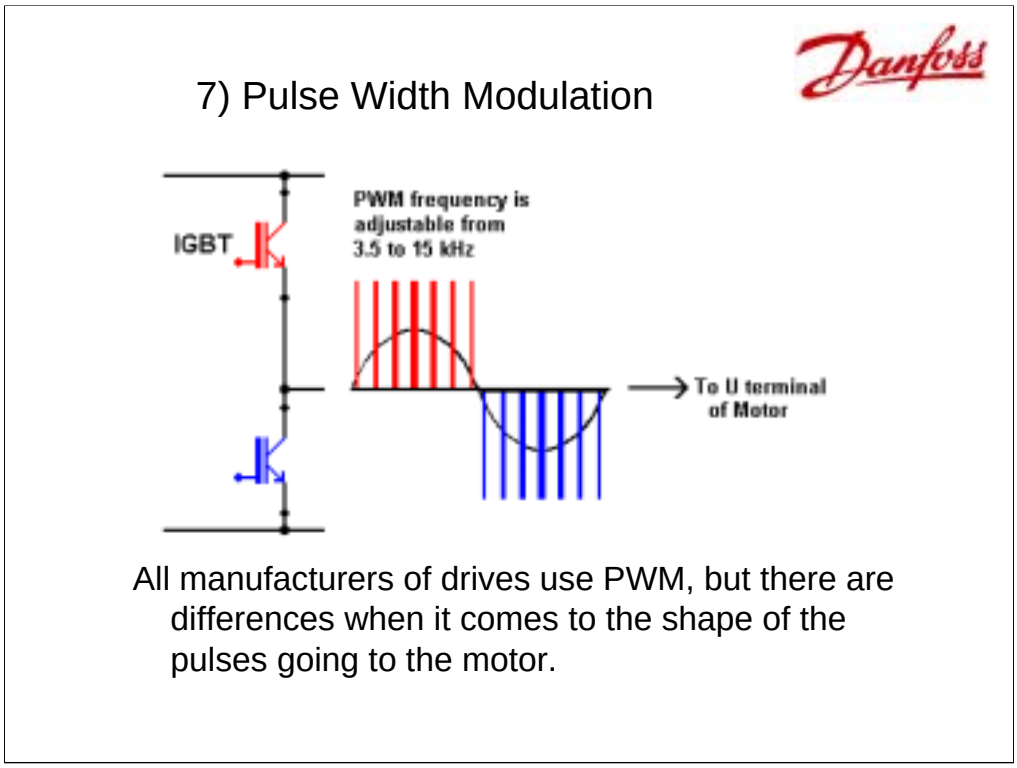

7) Pulse Width Modulation

In the diagram above, a close up view of the waveform that goes to the motor shows the switching frequency of the IGBTs. The switching-pattern shown above is known as pulse width modulation or PWM. As the length of time is increased for the IGBT to be ON and then OFF, the motor responds to it as a sinusoidal waveform. The positive IGBT fires first in the diagram followed by its negative counterpart. Only one motor terminal (U) is shown but the same type of activity would appear on V and W.

In the diagram above only 7 pulses are shown on each side, but actually 1750 pulses or more should be shown. This PWM frequency can vary from 3.5KHz to 15 kHz, which means it is audible. It is also known as the **Carrier Frequency**, which is Variable by most VFD manufacturers. A low carrier frequency can have an annoying noise, but a higher carrier frequency generates more heat in the drive and motor. If the carrier frequency noise is too loud particularly with supply fans, LC filters can be placed between the VFD and motor and the noise stops at this filter.

7) Pulse Width Modulation

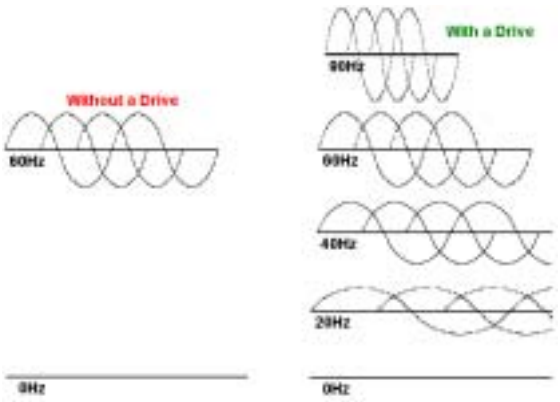

Without a drive, the motor can go full speed or OFF;
With a drive, the motor can go to a number of different speeds.

At first glance the function of a drive might look rather confusing. Taking 50Hz or 60Hz power input then changing it to DC only to change it back to look like AC to the motor. Due to the electronics in the drive, the DC voltage can be manipulated in a much easier and adaptable fashion. In the example, without the drive, the only signal the motor sees is ON (50Hz/60Hz) or OFF (0Hz). With a drive the motor can operate with 20Hz, 40Hz, 60Hz, 90Hz or any frequency in between, making it much more adaptable to any application.

8) Control & Regulation

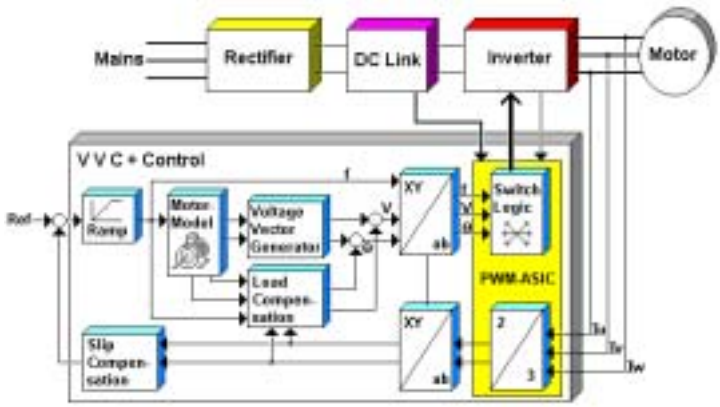

The control and regulation section monitors the other 3 sections, making numerous calculations and adjustments to the outgoing signal.

8) Control & Regulation Section

The control section coordinates and regulates signals inside the drive. This is where numerous calculations are completed to properly switch the IGBTs. This control section uses Vector technology, which separates the torque producing current from the magnetizing current. In the diagram above the current going to the AC motor is being monitored.

The Danfoss VLT 6000 has a special program, algorithm, called Automatic Motor Adaptation (AMA), which determines the electrical parameters for the connected motor while the motor is at a standstill, a feature introduced by Danfoss in 1996. Many competitors must decouple and spin the motor for tuning. Because the AMA measures the resistance and reactance of the motor's stator establishing a motor model, the magnetizing current can be calculated. This motor model is used to calculate the slip and load compensation.

The control section uses the frequency (f), voltage (V) and phase angle (theta) to control the inverter. This means that the torque producing current can be controlled more accurately. This robust sensor-less regulation scheme Voltage Vector Control (VVC+), which is patented by Danfoss, can compensate for rapid load changes.

In most HVAC applications where there is a minimum speed greater than 5Hz, the AMA feature is only a minor benefit. It is very important if used on motors spinning at 5Hz or less.

8) Control & Regulation

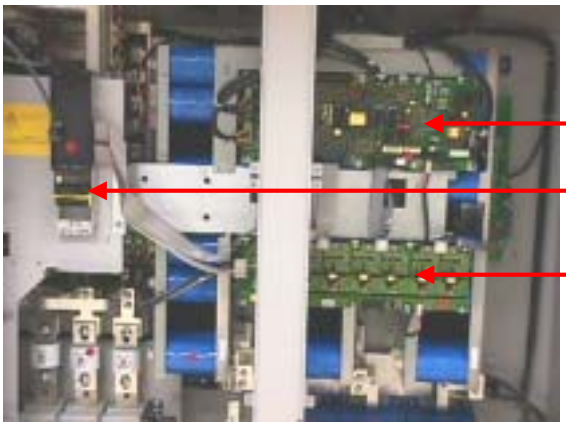

Three cards make up the control and regulation section, the control card, the power card and the gate card. On smaller units the power and gate cards are combined.

In the picture above, on the 450kW (600Hp) drive, 3 circuit cards make up the control and regulation section for the drive. These cards are mounted onto the frame used for the capacitor banks.

The Control Card is the same card used on all drives from 0.75 – 450kW (1 - 600Hp). The Local Keypad (LCP) fits into this control section. The LCP is used to program and monitor the drives operation. The next card is known as the power card, which is specific for a particular size of drives. It relays signals to the gate card, monitors the current from the current sensors, coordinates the fan operation and a number of other functions. The third is known as the gate card, whose major function is to send signals to the IGBTs. On smaller drives these last 2 circuit cards are together on one card.

Summary

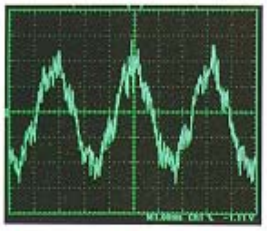

Conventional PWM

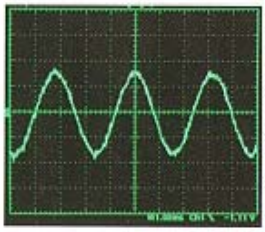

Danfoss V V C +

The function of all the parts of the drive, Rectifier, DC Link, Inverter and Control/Regulation is to make a clean waveform to the motor.

The operation of the control and regulation section produces a very clean waveform going to the motor. The picture to the left shows an oscilloscope trace of a motor phase current provided by a conventional pulse width modulation system with harmonic elimination. To the right is the output from the Danfoss VVC+ system. The more sinusoidal the wave form going to the motor the easier it is on the motor and the less heat resulting in longer motor life.

Here are some of the advantages of the control and regulation program that is in the Danfoss drives.

Advantages of Voltage Vector Control (VVC +)

Up to 110% motor torque for 1 minute.

Automatic Energy Optimization

Flying Start

Sleep Function at minimum speed, Wake up speed on demand

PID LOOP with 4-20mA input and/or 0-10Vdc inputs

Fast system response to speed and load changes (3 ms updates)

Disconnect switch allowed between the drive and motor

Sensor calculation: Max of 2, Min of 2, Average of 2, etc.

Long Cable lengths (1000' unshielded) between drive and motor.

This completes this lesson – Review Questions in Post-Test