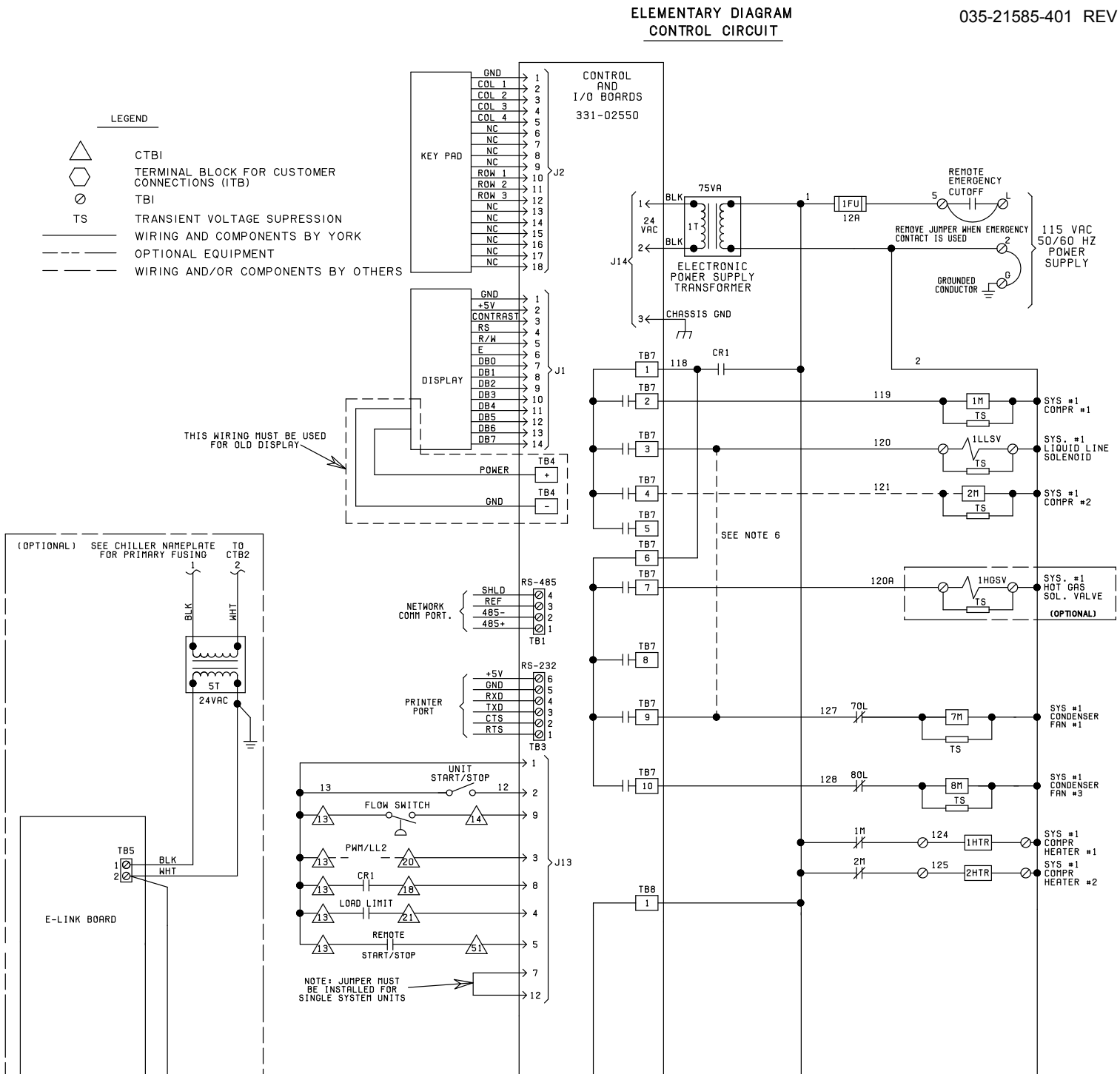


**FIGURE 13 -** CONTROL WIRING DIAGRAM, SINGLE CIRCUIT, IPU II

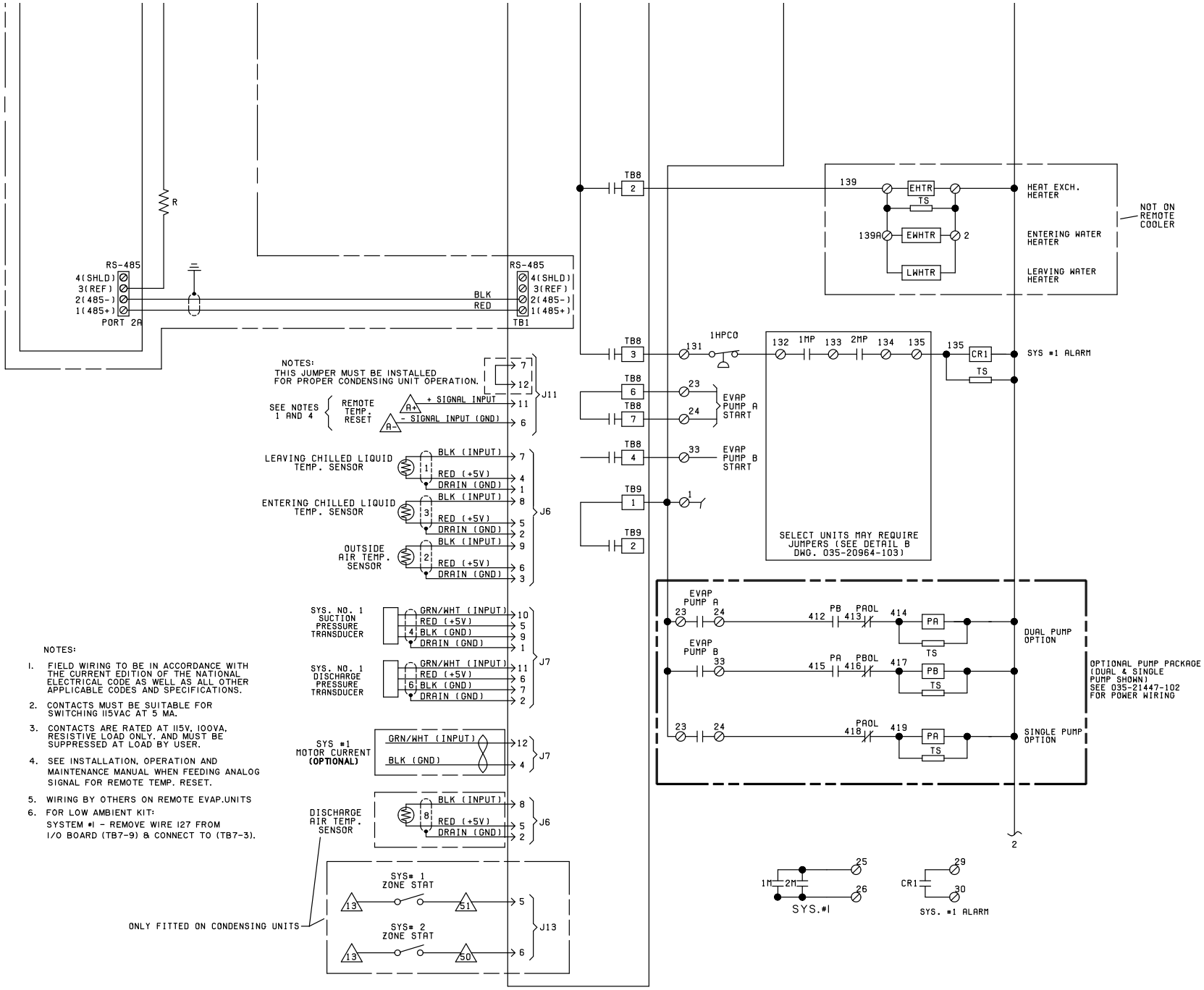


NOTES:

1. FIELD WIRING TO BE IN ACCORDANCE WITH THE CURRENT EDITION OF THE NATIONAL ELECTRICAL CODE AS WELL AS ALL OTHER APPLICABLE CODES AND SPECIFICATIONS.
2. CONTACTS MUST BE SUITABLE FOR SWITCHING 115VAC AT 5 MA.
3. CONTACTS ARE RATED AT 115V, 100VA, RESISTIVE LOAD ONLY. AND MUST BE SUPPRESSED AT LOAD BY USER.
4. SEE INSTALLATION, OPERATION AND MAINTENANCE MANUAL WHEN FEEDING ANALOG SIGNAL FOR REMOTE TEMP. RESET.
5. WIRING BY OTHERS ON REMOTE EVAP.UNITS
6. FOR LOW AMBIENT KIT:
   SYSTEM #1 - REMOVE WIRE 127 FROM I/O BOARD (TB7-9) & CONNECT TO (TB7-3).