YORK®	AIR-COOLED SCREW LIQUID CHILLERS	
WIRING DIAGRAM	New Release	Form 201.19-W5 (1104)

YCAS AIR-COOLED LIQUID CHILLERS
YCAS0098 THROUGH YCAS0208
STYLE G (R407C)
(60 Hz)

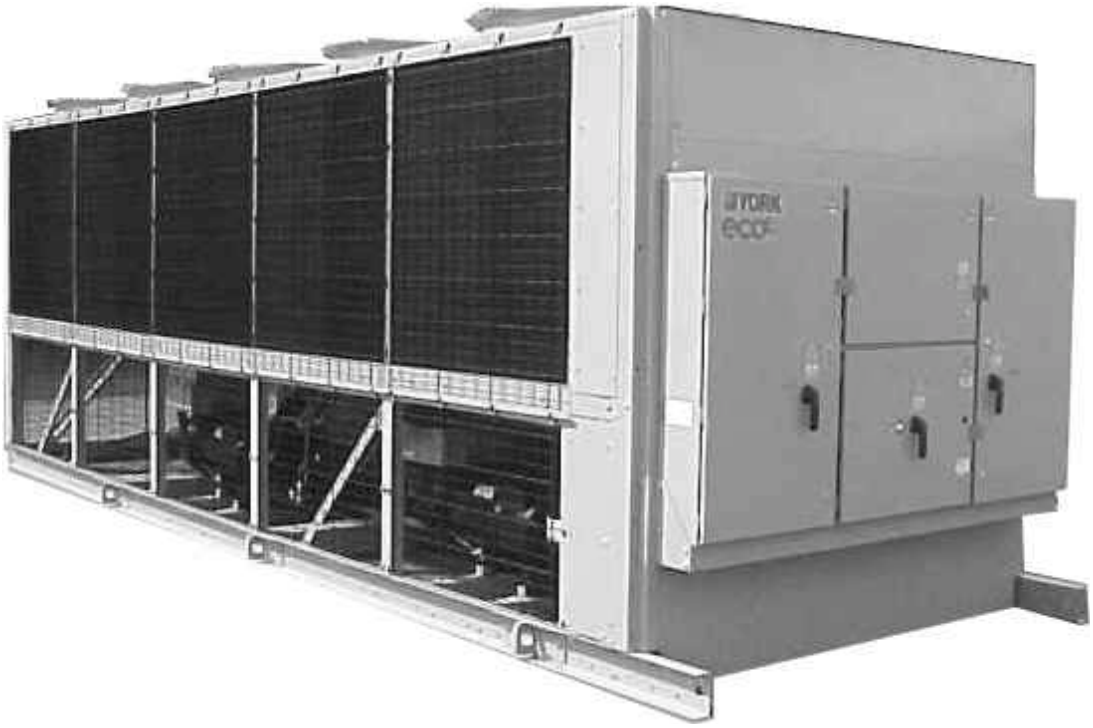

200-3-60
230-3-60
380-3-60
460-3-60
575-3-60
MODELS ONLY

Metric Conversions

TABLE OF CONTENTS

PAGE

NOMENCLATURE 3
ELECTRICAL NOTES 4
ELECTRICAL DATA 6
WIRING DIAGRAM 14
ELEMENTARY DIAGRAM 16
WIRING DIAGRAM 18
ELEMENTARY DIAGRAM 20
POWER PANEL 22
CONTROL PANEL 23
POWER PANEL 24
CONNECTION DIAGRAM (SYSTEM WIRING) 27
COMPRESSOR TERMINAL BOX 28
ELEMENTARY DIAGRAM STARTER CONTROL CIRCUIT 29
ELEMENTARY DIAGRAM FAN CONTROL 30

LIST OF FIGURES

FIG. 1 – WIRING DIAGRAM – ACROSS-THE-LINE START 14
FIG. 2 – WIRING DIAGRAM – ACROSS-THE-LINE START 15
FIG. 3 – ELEMENTARY DIAGRAM – ACROSS-THE-LINE START 16
FIG. 4 – WIRING DIAGRAM – WYE-DELTA START 18
FIG. 5 – ELEMENTARY DIAGRAM – WYE-DELTA START 19
FIG. 6 – ELEMENTARY DIAGRAM – WYE-DELTA START 20
FIG. 7 – POWER PANEL (SYSTEM #1) COMPONENT LOCATIONS 22
FIG. 8 – CONTROL PANEL COMPONENT LOCATION 23
FIG. 9 – POWER PANEL (SYSTEM #2) COMPONENT LOCATIONS 24
FIG. 10 – CONNECTION DIAGRAM (SYSTEM WIRING) 27
FIG. 11 – COMPRESSOR TERMINAL BOX 28
FIG. 12 – ELEMENTARY DIAGRAM STARTER CONTROL CIRCUIT 29
FIG. 13 – ELEMENTARY DIAGRAM FAN CONTROL CIRCUIT 30

NOMENCLATURE

The Model Number denotes the following characteristics of the unit:

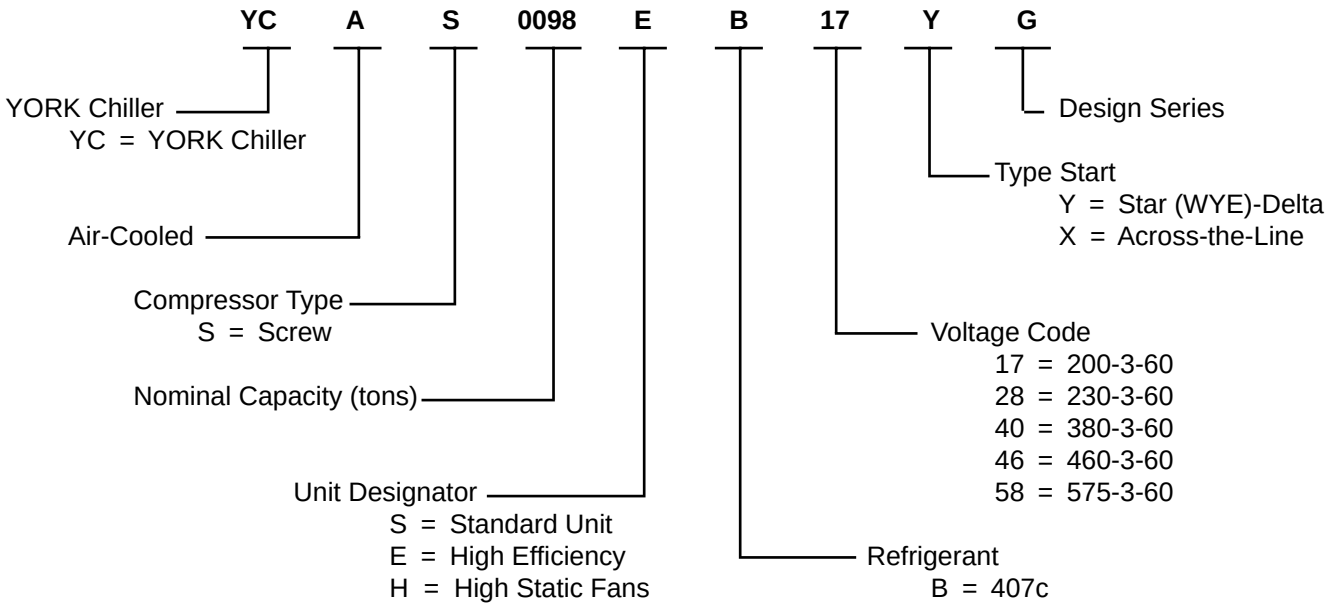

WARNING

HIGH VOLTAGE
is used in the operation of this equipment.
DEATH OR SERIOUS INJURY
may result if personnel fail to observe safety precautions.

Work on electronic equipment should not be undertaken unless the individual(s) have been trained in the proper maintenance of equipment and is (are) familiar with its potential hazards.

Shut off power supply to equipment before beginning work and follow lockout procedures. When working inside equipment with power off, take care to discharge every capacitor likely to hold dangerous potential.

Be careful not to contact high voltage connections when installing or operating this equipment.

LOW VOLTAGE

DO NOT be misled by the term “low voltage”.
Voltages as low as 50 volts may cause death.

ELECTRICAL NOTES

NOTES & LEGEND

LEGEND

ACR-LINE	ACROSS THE LINE START
C.B.	CIRCUIT BREAKER
D.E.	DUAL ELEMENT FUSE
DISC SW	DISCONNECT SWITCH
FACT CB	FACTORY-MOUNTED CIRCUIT BREAKER
FLA	FULL LOAD AMPS
HZ	HERTZ
MAX	MAXIMUM
MCA	MINIMUM CIRCUIT AMPACITY
MIN	MINIMUM
MIN NF	MINIMUM NON-FUSED
RLA	RUNNING LOAD AMPS
S.P. WIRE	SINGLE-POINT WIRING
Y-Δ	WYE-DELTA START
X-LRA	ACROSS-THE-LINE INRUSH LOCKED ROTOR AMPS
Y-LRA	WYE-DELTA INRUSH LOCKED ROTOR AMPS

VOLTAGE CODE

-17 = 200-3-60
-28 = 230-3-60
-40 = 380-3-60
-46 = 460-3-60
-58 = 575-3-60

NOTES:

1. Minimum circuit ampacity (MCA) is based on 125% of the rated load amps for the largest motor plus 100% of the rated load amps for all other loads included in the circuit, per N.E.C. Article 430-24. If a Factory Mounted Control Transformer is provided, add the following to the system #1 MCA values in the YCAS Tables: -17, add 15 amps; -28, add 12 amps; -40, add 7 amps; -46, add 6 amps; -58, add 5 amps.
2. The recommended disconnect switch is based on a minimum of 115% of the summation rated load amps of all the loads included in the circuit, per N.E.C. 440 - 12A1.
3. Minimum recommended fuse size is based on 150% of the largest motor RLA plus 100% of the remaining RLAs. Minimum fuse rating = (1.5 x largest compressor RLA) + other compressor RLAs + (# fans x each fan motor FLA).
4. Maximum dual element fuse size is based on 225% maximum plus 100% of the rated load amps for all other loads included in the circuit, per N.E.C. 440-22. Maximum fuse rating = (2.25 x largest compressor RLA) + other compressor RLAs + (# fans x each fan motor FLA).
5. Minimum recommended circuit breaker is 150% maximum plus 100% of rated load amps included in the circuit. Minimum circuit breaker rating = (1.5 x largest compressor RLA) + other compressor RLAs + (# fans x each fan motor FLA).
6. Maximum circuit breaker is based on 225% maximum plus 100% of the rated load amps for all loads included in the circuit, per circuit, per U.L. 1995 Fig. 36.2. Maximum circuit breaker rating = (2.25 x largest compressor RLA) + other compressor RLAs + (# fans x each fan motor FLA).
7. The Incoming Wire Range is the minimum and maximum wire size that can be accommodated by unit wiring lugs. The (1), (2), or (3) indicate the number of termination points or lugs which are available per phase. Actual wire size and number of wires per phase must be determined based on ampacity and job requirements using N.E.C. wire sizing information. The above recommendations are based on the National Electric Code and using **copper conductors** only. Field wiring must also comply with local codes.
8. A ground lug is provided for each compressor system to accommodate field grounding conductor per N.E.C. Article 250-54. A control circuit grounding lug is also supplied. Incoming ground wire range is #6 - 350 MCM.
9. The field supplied disconnect is a “Disconnecting Means” as defined in N.E.C. 100.B, and is intended for isolating the unit from the available power supply to perform maintenance and troubleshooting. This disconnect is not intended to be a Load Break Device.
10. Two-Compressor machines with single-point power connection, and equipped with Star (Wye)-Delta Compressor motor start must also include factory-provided individual system circuit breakers in each motor control center. All 3 & 4 Compressor machines equipped with Star-Delta compressor motor start must also include factory-provided individual system circuit breakers in each motor control center.
11. Consult factory for Electrical Data on units equipped with “High Static Fan” option. High Static Fans are 3.8 kW each.
12. FLA for “Low Noise Fan” motors: 200V = 8.0A, 230V = 7.8A, 380V = 4.4A, 460V = 3.6A, 575V = 2.9A.
13. Group Rated breaker must be HACR type for cU.L. Machines.

This page intentionally left blank.

ELECTRICAL DATA

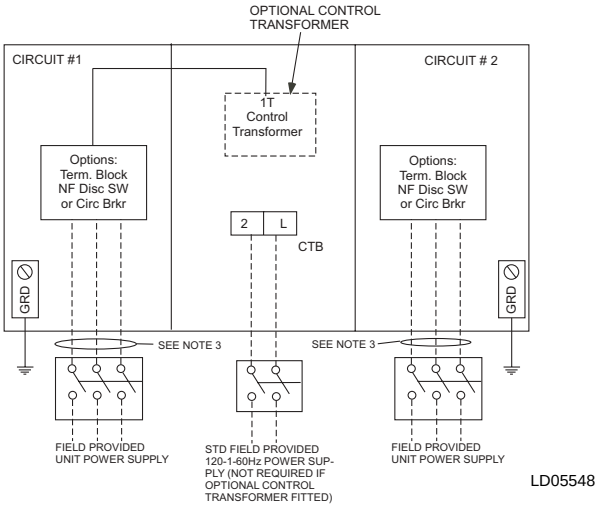

MULTIPLE POINT POWER SUPPLY CONNECTION

Suitable for:
Y - Δ Start and
Across-The-Line-Start

Two field provided power supply circuits to the unit. Field Power Wiring connections to factory provided, Non-Fused Disconnect Switches (Opt), Circuit Breakers (Opt) or Terminal Blocks (Opt).

See page 4 for notes.

MULTIPLE POINT POWER SUPPLY CONNECTION - 2 COMPRESSOR UNITS

(Two Field Provided Power Supply Circuits To The Chiller. Field Connections to Factory Provided Terminal Block (Std), Disconnects (Opt), or Individual System Circuit Breakers (Opt) in each of the two Motor Control Centers.)

MODEL YCAS	VOLTS	SYSTEM #1 FIELD-SUPPLIED WIRING												
		FIELD PROVIDED POWER SUPPLY				FACTORY PROVIDED (LUGS) WIRE RANGE[7]			COMPRESSOR #1			FANS[11, 12]		
		MCA[1]	MIN NF DISC SW[2, 9]	OVER-CURRENT PROTECTION MIN.[3, 5]	OVER-CURRENT PROTECTION MAX.[4, 6]	STD. TERMINAL BLOCK	OPT. NF. DISC SW.	OPT. C.B.	RLA	Y-D-LRA	XL-LRA	QTY	FLA (EA.)	LRA (EA.)
0098EB	200	235	250	300	400	1/0 - 300	#6 - 350	(2) 3/0 - 250	168	404	1257	3	8.2	33.0
	230	206	200	250	350	1/0 - 300	#4 - 300	#6 - 350	146	354	1103	3	7.8	38.0
	380	125	150	150	200	# 2 - 1/0 *	#4 - 300	#4 - 300	89	219	681	3	4.8	23.0
	460	103	100	125	150	# 6 - 1/0	#14 - 1/0	#4 - 300	73	174	542	3	4.0	19.0
	575	83	100	100	125	# 6 - 1/0	#14 - 1/0	#14 - 1/0	59	138	431	3	3.1	15.2
0118EB	200	344	400	400	500	2/0 - 500	(2) 3/0 - 250	(2) 3/0 - 250	255	591	1866	3	8.2	33.0
	230	301	400	350	500	2/0 - 500	(2) 3/0 - 250	(2) 3/0 - 250	222	481	1518	3	7.8	38.0
	380	182	200	225	300	# 2 - 4/0	#4 - 300	#4 - 300	134	285	900	3	4.8	23.0
	460	151	150	200	250	# 2 - 4/0	#4 - 300	#4 - 300	111	228	719	3	4.0	19.0
	575	121	150	150	200	# 6 - 1/0	#4 - 300	#4 - 300	90	182	574	3	3.1	15.2
0128EB	200	324	400	400	500	2/0 - 500	(2) 3/0 - 250	(2) 3/0 - 250	233	591	1866	4	8.2	33.0
	230	284	400	350	450	2/0 - 500	(2) 3/0 - 250	(2) 3/0 - 250	203	481	1518	4	7.8	38.0
	380	172	200	250	250	# 2 - 4/0	#4 - 300	#4 - 300	122	285	900	4	4.8	23.0
	460	143	150	175	225	# 2 - 4/0	#4 - 300	#4 - 300	101	228	719	4	4.0	19.0
	575	113	150	150	175	# 6 - 1/0	#4 - 300	#4 - 300	81	182	574	4	3.1	15.2
0138EB	200	323	400	400	500	2/0 - 500	(2) 3/0 - 250	(2) 3/0 - 250	232	591	1866	4	8.2	33.0
	230	284	400	350	450	2/0 - 500	(2) 3/0 - 250	(2) 3/0 - 250	202	481	1518	4	7.8	38.0
	380	172	200	225	250	# 2 - 4/0	#4 - 300	#4 - 300	122	285	900	4	4.8	23.0
	460	142	150	175	225	# 2 - 4/0	#4 - 300	#4 - 300	101	228	719	4	4.0	19.0
	575	113	150	150	175	# 6 - 1/0	#4 - 300	#4 - 300	81	182	574	4	3.1	15.2
0148EB	200	324	400	400	500	2/0 - 500	(2) 3/0 - 250	(2) 3/0 - 250	233	591	1866	4	8.2	33.0
	230	284	400	350	450	2/0 - 500	(2) 3/0 - 250	(2) 3/0 - 250	203	481	1518	4	7.8	38.0
	380	172	200	225	250	# 2 - 4/0	#4 - 300	#4 - 300	122	285	900	4	4.8	23.0
	460	143	150	175	225	# 2 - 4/0	#4 - 300	#4 - 300	101	228	719	4	4.0	19.0
	575	113	150	150	175	# 6 - 1/0	#4 - 300	#4 - 300	81	182	574	4	3.1	15.2
0158EB	200	433	600	600	700	(2) 1/0 - 300	(3) 2/0 - 400	(3) 2/0 - 400	320	708	2256	4	8.2	33.0
	230	379	400	450	600	(2) # 2-4/0	(2) 3/0 - 250	(3) 2/0 - 400	278	642	2045	4	7.8	38.0
	380	230	250	300	350	1/0 - 300	#6 - 350	(2) 3/0 - 250	168	343	1093	4	4.8	23.0
	460	190	200	225	300	# 2 - 4/0	#4 - 300	#4 - 300	140	280	893	4	4.0	19.0
	575	151	150	200	250	# 2 - 4/0	#4 - 300	#6 - 350	111	224	714	4	3.1	15.2
0178EB	200	433	600	600	700	(2) 1/0 - 300	(3) 2/0 - 400	(3) 2/0 - 400	320	708	2256	4	8.2	33.0
	230	378	400	450	600	(2) 1/0 - 300	(2) 3/0 - 250	(3) 2/0 - 400	278	642	2045	4	7.8	38.0
	380	230	250	300	350	1/0 - 300	#6 - 350	(2) 3/0 - 250	169	343	1093	4	4.8	23.0
	460	191	200	225	300	# 2 - 4/0	#4 - 300	#4 - 300	140	280	893	4	4.0	19.0
	575	151	150	200	250	# 2 - 4/0	#4 - 300	#6 - 350	111	224	714	4	3.1	15.2
0198EB	200	510	600	600	800	(2) 2/0 - 500	(3) 2/0 - 400	(3) 2/0 - 400	375	708	2256	5	8.2	33.0
	230	447	600	600	700	(2) 1/0 - 300	(3) 2/0 - 400	(3) 2/0 - 400	327	642	2045	5	7.8	38.0
	380	271	400	350	450	2/0 - 500	(2) 3/0 - 250	(2) 3/0 - 250	198	343	1093	5	4.8	23.0
	460	225	250	300	350	1/0 - 300	#6 - 350	(2) 3/0 - 250	164	280	893	5	4.0	190.0
	575	179	200	225	300	# 2 - 4/0	#6 - 350	#6 - 350	131	224	714	5	3.1	15.2
0208EB	200	510	600	700	800	(2) 2/0 - 500	(3) 2/0 - 400	(3) 2/0 - 400	376	708	2256	5	8.2	33.0
	230	447	600	600	700	(2) 1/0 - 300	(3) 2/0 - 400	(3) 2/0 - 400	326	642	2045	5	7.8	38.0
	380	271	250	350	450	2/0 - 500	#6 - 350	(2) 3/0 - 250	198	343	1093	5	4.8	23.0
	460	225	250	300	350	1/0 - 300	#6 - 350	(2) 3/0 - 250	164	280	893	5	4.0	19.0
	575	179	200	225	300	# 2 - 4/0	#6 - 350	#6 - 350	131	224	714	5	3.1	15.2

See page 4 for Electrical Data Notes.

ELECTRICAL DATA

MODEL YCAS	VOLTS	SYSTEM #2 FIELD-SUPPLIED WIRING												
		FIELD PROVIDED POWER SUPPLY				FACTORY PROVIDED (LUGS) WIRE RANGE[7]			COMPRESSOR #2			FANS[11, 12]		
		MCA[1]	MIN NF DISC SW[2, 9]	OVER-CURRENT PROTECTION MIN.[3, 5]	OVER-CURRENT PROTECTION MAX.[4, 6]	STD. TERMINAL BLOCK	OPT. NF. DISC SW.	OPT. C.B.	RLA	Y-D-LRA	XL-LRA	QTY	FLA (EA.)	LRA (EA.)
0098EB	200	235	250	300	400	1/0 - 300	#6 - 350	(2) 3/0 - 250	168	404	1257	3	8.2	33.0
	230	206	200	250	350	1/0 - 300	#4 - 300	#6 - 350	146	354	1103	3	7.8	38.0
	380	125	150	150	200	# 2 - 1/0 *	#4 - 300	#4 - 300	89	219	681	3	4.8	23.0
	460	103	100	125	150	# 6 - 1/0	#14 - 1/0	#4 - 300	73	174	542	3	4.0	19.0
	575	83	100	100	125	# 6 - 1/0	#14 - 1/0	#14 - 1/0	59	138	431	3	3.1	15.2
0118EB	200	234	250	300	400	1/0 - 300	#4 - 300	(2) 3/0 - 250	168	404	1257	3	8.2	33.0
	230	206	200	250	350	1/0 - 300	#4 - 300	#6 - 350	146	354	1103	3	7.8	38.0
	380	125	150	150	200	# 6 - 1/0	#4 - 300	#4 - 300	88	219	681	3	4.8	23.0
	460	103	100	125	150	# 6 - 1/0	#4 - 300	#4 - 300	73	174	542	3	4.0	19.0
	575	83	100	100	125	# 6 - 1/0	#14 - 1/0	#14 - 1/0	59	138	431	3	3.1	15.2
0128EB	200	232	250	300	350	1/0 - 300	#4 - 300	(2) 3/0 - 250	159	404	1257	4	8.2	33.0
	230	205	200	250	300	1/0 - 300	#4 - 300	#6 - 350	139	354	1103	4	7.8	38.0
	380	124	150	150	200	# 6 - 1/0	#4 - 300	#4 - 300	84	219	681	4	4.8	23.0
	460	102	100	125	150	# 6 - 1/0	#4 - 300	#4 - 300	69	174	542	4	4.0	19.0
	575	82	100	100	125	# 6 - 1/0	#14 - 1/0	#14 - 1/0	56	138	431	4	3.1	15.2
0138EB	200	323	400	400	500	2/0 - 500	(2) 3/0 - 250	(2) 3/0 - 250	232	591	1866	4	8.2	33.0
	230	284	400	350	450	2/0 - 500	(2) 3/0 - 250	(2) 3/0 - 250	202	481	1518	4	7.8	38.0
	380	172	200	225	250	# 2 - 4/0	#4 - 300	#4 - 300	122	285	900	4	4.8	23.0
	460	142	150	175	225	# 2 - 4/0	#4 - 300	#4 - 300	101	228	719	4	4.0	19.0
	575	113	150	150	175	# 6 - 1/0	#4 - 300	#4 - 300	81	182	574	4	3.1	15.2
0148EB	200	324	400	400	500	2/0 - 500	(2) 3/0 - 250	(2) 3/0 - 250	233	591	1866	4	8.2	33.0
	230	284	400	350	450	2/0 - 500	(2) 3/0 - 250	(2) 3/0 - 250	203	481	1518	4	7.8	38.0
	380	172	200	225	250	# 2 - 4/0	#4 - 300	#4 - 300	122	285	900	4	4.8	23.0
	460	143	150	175	225	# 2 - 4/0	#4 - 300	#4 - 300	101	228	719	4	4.0	19.0
	575	113	150	150	175	# 6 - 1/0	#4 - 300	#4 - 300	81	182	574	4	3.1	15.2
0158EB	200	324	400	400	500	2/0 - 500	(2) 3/0 - 250	(2) 3/0 - 250	233	591	1866	4	8.2	33.0
	230	284	400	350	450	2/0 - 500	(2) 3/0 - 250	(2) 3/0 - 250	203	481	1518	4	7.8	38.0
	380	172	200	225	250	# 2 - 4/0	#6 - 350	#4 - 300	122	285	900	4	4.8	23.0
	460	143	150	175	225	# 2 - 4/0	#4 - 300	#4 - 300	101	228	719	4	4.0	19.0
	575	114	150	150	175	# 6 - 1/0	#4 - 300	#4 - 300	81	182	574	4	3.1	15.2
0178EB	200	433	600	600	700	(2) 1/0 - 300	(3) 2/0 - 400	(3) 2/0 - 400	320	708	2256	4	8.2	33.0
	230	378	400	450	600	(2) 1/0 - 300	(2) 3/0 - 250	(3) 2/0 - 400	278	642	2045	4	7.8	38.0
	380	230	250	300	350	1/0 - 300	#6 - 350	(2) 3/0 - 250	169	343	1093	4	4.8	23.0
	460	191	200	225	300	# 2 - 4/0	#4 - 300	#4 - 300	140	280	893	4	4.0	19.0
	575	151	150	200	250	# 2 - 4/0	#4 - 300	#6 - 350	111	224	714	4	3.1	15.2
0198EB	200	412	400	500	700	(2) 2/0 - 300	(2) 3/0 - 250	(3) 2/0 - 400	297	708	2256	5	8.2	33.0
	230	361	400	450	600	(2) # 2 - 4/0	(2) 3/0 - 250	(3) 2/0 - 400	258	642	2045	5	7.8	38.0
	380	219	250	300	350	1/0 - 300	(2) 3/0 - 500	(2) 3/0 - 250	156	343	1093	5	4.8	23.0
	460	182	200	225	300	# 2 - 4/0	#6 - 350	#4 - 300	129	280	893	5	4.0	19.0
	575	144	150	175	225	# 2 - 4/0	#6 - 350	#6 - 350	103	224	714	5	3.1	15.2
0208EB	200	510	600	700	800	(2) 2/0 - 500	(3) 2/0 - 400	(3) 2/0 - 400	376	708	2256	5	8.2	33.0
	230	447	600	600	700	(2) 1/0 - 300	(3) 2/0 - 400	(3) 2/0 - 400	326	642	2045	5	7.8	38.0
	380	271	250	350	450	2/0 - 500	#6 - 350	(2) 3/0 - 250	198	343	1093	5	4.8	23.0
	460	225	250	300	350	1/0 - 300	#6 - 350	(2) 3/0 - 250	164	280	893	5	4.0	19.0
	575	179	200	225	300	# 2 - 4/0	#6 - 350	#6 - 350	131	224	714	5	3.1	15.2

ELECTRICAL DATA

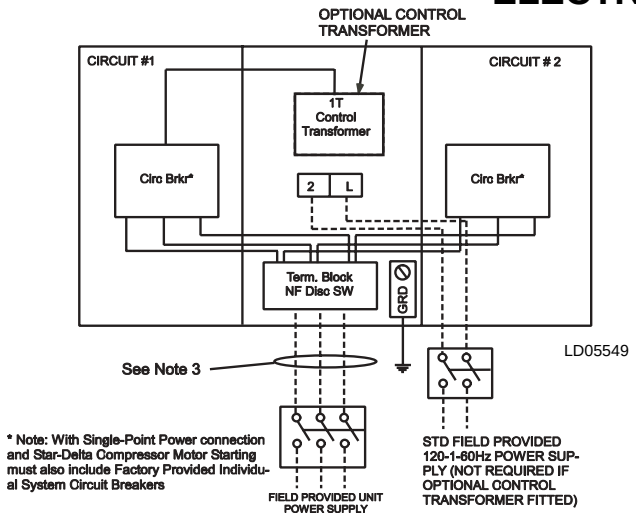

OPTIONAL SINGLE-POINT POWER SUPPLY CONNECTION AND INDIVIDUAL SYSTEM CIRCUIT BREAKERS

Suitable for:
Y - Δ Start and
Across-The-Line-Start

One field provided power supply circuit to the unit. Field connections to factory provided Non-Fused Disconnect Switch (Opt), or Terminal Block (Opt). Factory connections to Circuit Breakers on Terminal Blocks in each of the two Power Panels.

See page 4 for notes.

OPTIONAL SINGLE-POINT POWER SUPPLY WITH INDIVIDUAL SYSTEM CIRCUIT BREAKERS – 2 COMPRESSOR UNITS

(One Field Provided Power Supply Circuit to the chiller. Field connections to Factory Provided Terminal Block (standard) or Non-Fused Disconnect (option). Individual System Circuit Breakers in each Motor Control Center[10])

CHILLER MODEL YCAS	VOLTS	FIELD-SUPPLIED WIRING					
		FIELD PROVIDED POWER SUPPLY				FACTORY PROVIDED (LUGS) WIRE RANGE [7]	
		MCA[1]	MIN NF DISC SW[2, 9]	OVER-CURRENT PROTECTION[13] MIN.[3, 5]	OVER-CURRENT PROTECTION[13] MAX.[4, 6]	STANDARD TERMINAL BLOCK	OPTIONAL NF DISC. SWITCH
0098EB	200	427	600	500	500	(2) 1/0 - 300	(2) 250 - 500
	230	376	400	450	500	(2) # 2 - 4/0	(2) 3/0 - 250
	380	228	250	250	300	1/0 - 300	# 6 - 350
	460	188	200	225	250	# 2 - 4/0	# 6 - 350
	575	151	200	175	200	1/0 - 300	# 6 - 350
0118EB	200	536	600	700	800	(2) 2/0 - 500	(2) 250 - 500
	230	471	600	600	700	(2) 1/0 - 300	(2) 250 - 500
	380	285	400	350	400	2/0 - 500	(2) 3/0 - 250
	460	236	250	300	350	1/0 - 300	# 6 - 350
	575	189	200	225	250	1/0 - 300	# 6 - 350
0128EB	200	516	600	600	700	(2) 2/0 - 500	(2) 250 - 500
	230	454	600	600	600	(2) 1/0 - 300	(2) 250 - 500
	380	275	400	350	350	2/0 - 500	(2) 3/0 - 250
	460	228	250	300	300	1/0 - 300	# 6 - 350
	575	182	200	225	250	1/0 - 300	# 6 - 350
0138EB	200	589	800	700	800	(2) 2/0 - 500	(3) 2/0 - 400
	230	517	600	600	700	(2) 2/0 - 500	(2) 250 - 500
	380	313	400	350	400	2/0 - 500	(2) 3/0 - 250
	460	259	400	300	350	2/0 - 500	(2) 3/0 - 250
	575	206	250	250	250	1/0 - 300	# 6 - 350
0148EB	200	590	800	700	800	(2) 2/0 - 500	(3) 2/0 - 400
	230	518	600	600	700	(2) 2/0 - 500	(2) 250 - 500
	380	313	400	350	400	2/0 - 500	(2) 3/0 - 250
	460	260	400	300	350	2/0 - 500	(2) 3/0 - 250
	575	207	250	225	250	1/0 - 300	# 6 - 350
0158EB	200	699	800	800	1000	(3) 1/0 - 300	(3) 2/0 - 400
	230	613	800	700	800	(2) 2/0 - 500	(3) 2/0 - 400
	380	371	400	450	500	(2) # 2 - 4/0	(2) 3/0 - 250
	460	308	400	350	400	2/0 - 500	(2) 3/0 - 250
	575	244	250	300	350	2/0 - 500	# 6 - 350
0178EB	200	786	1000	1000	1000	(3) 2/0 - 500	(4) 250 - 500
	230	688	800	800	800	(3) 1/0 - 300	(3) 2/0 - 400
	380	418	600	500	500	(2) 1/0 - 300	(2) 250 - 500
	460	347	400	400	450	(2) # 2 - 4/0	(2) 3/0 - 250
	575	275	400	350	350	2/0 - 500	(2) 3/0 - 250
0198EB	200	848	1000	1000	1200	(3) 2/0 - 500	(4) 250 - 500
	230	744	800	1000	1000	(3) 1/0 - 300	(3) 2/0 - 400
	380	451	600	600	600	(2) 1/0 - 300	(2) 250 - 500
	460	374	400	450	500	(2) # 2 - 4/0	(2) 3/0 - 250
	575	297	400	350	400	2/0 - 500	(2) 3/0 - 250
0208EB	200	927	1000	1200	1200	(3) 2/0 - 500	(4) 250 - 500
	230	812	1000	1000	1200	(3) 2/0 - 500	(4) 250 - 500
	380	493	600	600	600	(2) 1/0 - 300	(2) 250 - 500
	460	408	600	500	500	(2) 1/0 - 300	(2) 250 - 500
	575	325	400	400	400	2/0 - 500	(2) 3/0 - 250

See page 4 for Electrical Data footnotes.

ELECTRICAL DATA

MODEL YCAS	VOLTS	SYSTEM #1						SYSTEM #2					
		COMPRESSOR #1			FAN DATA[11, 12]			COMPRESSOR #2			FAN DATA[11, 12]		
		RLA	Y-D-LRA	XL-LRA	QTY	FLA (EA.)	LRA (EA)	RLA	Y-D-LRA	XL-LRA	QTY	FLA (EA)	LRA (EA)
0098EB	200	168	404	1257	3	8.2	33.0	168	404	1257	3	8.2	33.0
	230	146	354	1103	3	7.8	38.0	146	354	1103	3	7.8	38.0
	380	89	219	681	3	4.8	23.0	89	219	681	3	4.8	23.0
	460	73	174	542	3	4.0	19.0	73	174	542	3	4.0	19.0
	575	59	138	431	3	3.1	15.2	59	138	431	3	3.1	15.2
0118EB	200	255	591	1866	3	8.2	33.0	168	404	1257	3	8.2	33.0
	230	222	481	1518	3	7.8	38.0	146	354	1103	3	7.8	38.0
	380	134	285	900	3	4.8	23.0	88	219	681	3	4.8	23.0
	460	111	228	719	3	4.0	19.0	73	174	542	3	4.0	19.0
	575	90	182	574	3	3.1	15.2	59	138	431	3	3.1	15.2
0128EB	200	233	591	1866	4	8.2	33.0	159	404	1257	4	8.2	33.0
	230	203	481	1518	4	7.8	38.0	139	354	1103	4	7.8	38.0
	380	122	285	900	4	4.8	23.0	84	219	681	4	4.8	23.0
	460	101	228	719	4	4.0	19.0	69	174	542	4	4.0	19.0
	575	81	182	574	4	3.1	15.2	56	138	431	4	3.1	15.2
0138EB	200	232	591	1866	4	8.2	33.0	232	591	1866	4	8.2	33.0
	230	202	481	1518	4	7.8	38.0	202	481	1518	4	7.8	38.0
	380	122	285	900	4	4.8	23.0	122	285	900	4	4.8	23.0
	460	101	228	719	4	4.0	19.0	101	228	719	4	4.0	19.0
	575	81	182	574	4	3.1	15.2	81	182	574	4	3.1	15.2
0148EB	200	233	591	1866	4	8.2	33.0	233	591	1866	4	8.2	33.0
	230	203	481	1518	4	7.8	38.0	203	481	1518	4	7.8	38.0
	380	122	285	900	4	4.8	23.0	122	285	900	4	4.8	23.0
	460	101	228	719	4	4.0	19.0	101	228	719	4	4.0	19.0
	575	81	182	574	4	3.1	15.2	81	182	574	4	3.1	15.2
0158EB	200	320	708	2256	4	8.2	33.0	233	591	1866	4	8.2	33.0
	230	278	642	2045	4	7.8	38.0	203	481	1518	4	7.8	38.0
	380	168	343	1093	4	4.8	23.0	122	285	900	4	4.8	23.0
	460	140	280	893	4	4.0	19.0	101	228	719	4	4.0	19.0
	575	111	224	714	4	3.1	15.2	81	182	574	4	3.1	15.2
0178EB	200	320	708	2256	4	8.2	33.0	320	708	2256	4	8.2	33.0
	230	278	642	2045	4	7.8	38.0	278	642	2045	4	7.8	38.0
	380	169	343	1093	4	4.8	23.0	169	343	1093	4	4.8	23.0
	460	140	280	893	4	4.0	19.0	140	280	893	4	4.0	19.0
	575	111	224	714	4	3.1	15.2	111	224	714	4	3.1	15.2
0198EB	200	375	708	2256	5	8.2	33.0	297	708	2256	5	8.2	33.0
	230	327	642	2045	5	7.8	38.0	258	642	2045	5	7.8	38.0
	380	198	343	1093	5	4.8	23.0	156	343	1093	5	4.8	23.0
	460	164	280	893	5	4.0	19.0	129	280	893	5	4.0	19.0
	575	131	224	714	5	3.1	15.2	103	224	714	5	3.1	15.2
0208EB	200	376	708	2256	5	8.2	33.0	376	708	2256	5	8.2	33.0
	230	326	642	2045	5	7.8	38.0	326	642	2045	5	7.8	38.0
	380	198	343	1093	5	4.8	23.0	198	343	1093	5	4.8	23.0
	460	164	280	893	5	4.0	19.0	164	280	893	5	4.0	19.0
	575	131	224	714	5	3.1	15.2	131	224	714	5	3.1	15.2

ELECTRICAL DATA

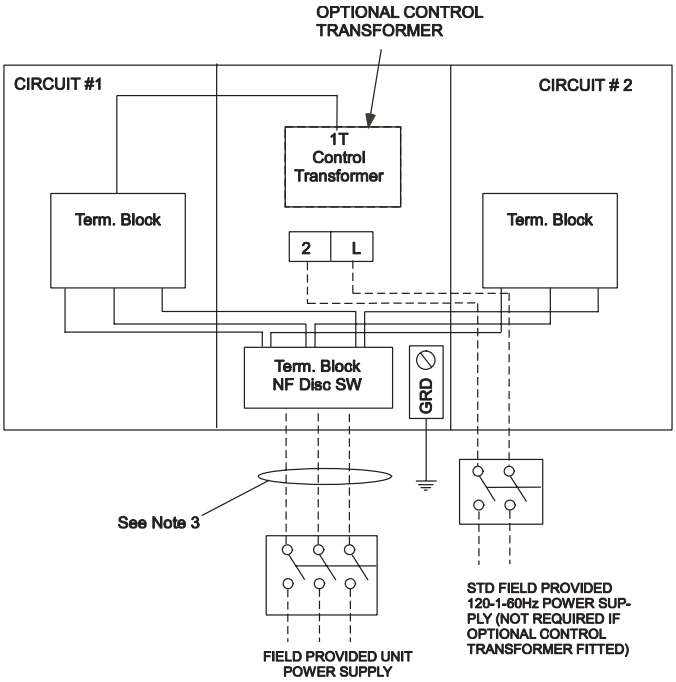

LD05550

OPTIONAL SINGLE-POINT POWER SUPPLY CONNECTION WITH FIELD SUPPLIED CIRCUIT PROTECTION

Suitable for:
Y - Δ Start and
Across-The-Line-Start

One field provided power supply circuit to the unit. Field connections to factory provided Non-Fused Disconnect Switch (Opt), or Terminal Block (Opt). Factory connections to Terminal Blocks in each of the two Power Panels.

See page 4 for notes.

OPTIONAL SINGLE-POINT POWER SUPPLY CONNECTION – 2 COMPRESSOR UNITS

(One Field Provided Power Supply Circuit to the Chiller. Field connections to Factory Provided Terminal Block (Standard) or Non-Fused Disconnect (option). No Internal Branch Circuit Protection (Breakers) per Motor Control Center[10])

CHILLER MODEL YCAS	VOLTS	FIELD-SUPPLIED WIRING					
		FIELD PROVIDED POWER SUPPLY				FACTORY PROVIDED (LUGS) WIRE RANGE [7]	
		MCA[1]	MIN NF DISC SW[2, 9]	OVER-CURRENT PROTECTION[13] MIN.[3, 5]	OVER-CURRENT PROTECTION[13] MAX.[4, 6]	STANDARD TERMINAL BLOCK	OPTIONAL NF DISC. SWITCH
0098EB	380	228	250	250	300	1/0 - 300	# 6 - 350
	460	188	200	225	250	# 2 - 4/0	# 6 - 350
	575	151	200	175	200	1/0 - 300	# 6 - 350
0118EB	380	285	400	350	400	2/0 - 500	(2) 3/0 - 250
	460	236	250	300	350	1/0 - 300	# 6 - 350
	575	189	200	225	250	1/0 - 300	# 6 - 350
0128EB	380	275	400	350	350	2/0 - 500	(2) 3/0 - 250
	460	228	250	300	300	1/0 - 300	# 6 - 350
	575	182	200	225	250	1/0 - 300	# 6 - 350
0138EB	380	313	400	350	400	2/0 - 500	(2) 3/0 - 250
	460	259	400	300	350	2/0 - 500	(2) 3/0 - 250
	575	206	250	250	250	1/0 - 300	# 6 - 350
0148EB	380	313	400	350	400	2/0 - 500	(2) 3/0 - 250
	460	260	400	300	350	2/0 - 500	(2) 3/0 - 250
	575	207	250	250	250	1/0 - 300	# 6 - 350
0158EB	380	371	400	450	500	(2) # 2 - 4/0	(2) 3/0 - 250
	460	308	400	350	400	2/0 - 500	(2) 3/0 - 250
	575	244	250	300	350	2/0 - 500	# 6 - 350
0178EB	380	418	600	500	500	(2) 1/0 - 300	(2) 250 - 500
	460	347	400	400	450	(2) # 2 - 4/0	(2) 3/0 - 250
	575	275	400	350	350	2/0 - 500	(2) 3/0 - 250
0198EB	380	451	600	600	600	(2) 1/0 - 300	(2) 250 - 500
	460	374	400	450	500	(2) # 2 - 4/0	(2) 3/0 - 250
	575	297	400	350	400	2/0 - 500	(2) 3/0 - 250
0208EB	380	493	600	600	600	(2) 1/0 - 300	(2) 250 - 500
	460	408	600	500	500	(2) 1/0 - 300	(2) 250 - 500
	575	325	400	350	400	2/0 - 500	(2) 3/0 - 250

See page 4 for Electrical Data footnotes.

ELECTRICAL DATA

MODEL YCAS	VOLTS	SYSTEM #1					SYSTEM #2				
		COMPRESSOR #1		FAN DATA[11, 12]			COMPRESSOR #2		FAN DATA[11,12]		
		RLA	XL-LRA	QTY	FLA (EA.)	LRA (EA)	RLA	XL-LRA	QTY	FLA (EA)	LRA (EA)
0098EB	380	89	681	3	4.8	23.0	89	681	3	4.8	23.0
	460	73	542	3	4.0	19.0	73	542	3	4.0	19.0
	575	59	431	3	3.1	15.2	59	431	3	3.1	15.2
0118EB	380	134	900	3	4.8	23.0	88	681	3	4.8	23.0
	460	111	719	3	4.0	19.0	73	542	3	4.0	19.0
	575	90	574	3	3.1	15.2	59	431	3	3.1	15.2
0128EB	380	122	900	4	4.8	23.0	84	681	4	4.8	23.0
	460	101	719	4	4.0	19.0	69	542	4	4.0	19.0
	575	81	574	4	3.1	15.2	56	431	4	3.1	15.2
0138EB	380	122	900	4	4.8	23.0	122	900	4	4.8	23.0
	460	101	719	4	4.0	19.0	101	719	4	4.0	19.0
	575	81	574	4	3.1	15.2	81	574	4	3.1	15.2
0148EB	380	122	900	4	4.8	23.0	122	900	4	4.8	23.0
	460	101	719	4	4.0	19.0	101	719	4	4.0	19.0
	575	81	574	4	3.1	15.2	81	574	4	3.1	15.2
0158EB	380	168	1093	4	4.8	23.0	122	900	4	4.8	23.0
	460	140	893	4	4.0	19.0	101	719	4	4.0	19.0
	575	111	714	4	3.1	15.2	81	574	4	3.1	15.2
0178EB	380	169	1093	4	4.8	23.0	169	1093	4	4.8	23.0
	460	140	893	4	4.0	19.0	140	893	4	4.0	19.0
	575	111	714	4	3.1	15.2	111	714	4	3.1	15.2
0198EB	380	198	1093	5	4.8	23.0	156	1093	5	4.8	23.0
	460	164	893	5	4.0	19.0	129	893	5	4.0	19.0
	575	131	714	5	3.1	15.2	103	714	5	3.1	15.2
0208EB	380	198	1093	5	4.8	23.0	198	1093	5	4.8	23.0
	460	164	893	5	4.0	19.0	164	893	5	4.0	19.0
	575	131	714	5	3.1	15.2	131	714	5	3.1	15.2

ELECTRICAL DATA (CONT'D)

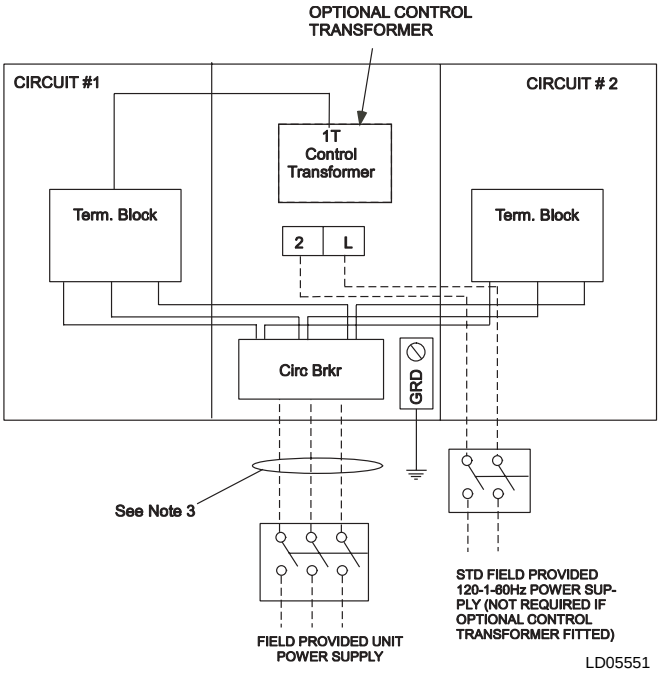

OPTIONAL SINGLE-POINT POWER SUPPLY CONNECTION TO FACTORY CIRCUIT BREAKER

Suitable for:
Across-The-Line-Start

One field provided power supply circuit to the unit. Field connections to factory provided Circuit Breaker in the Options Panel. Factory connections to Terminal Blocks in each of the two Power Panels.

See page 4 for notes.

OPTIONAL SINGLE-POINT POWER SUPPLY CONNECTION TO FACTORY CIRCUIT BREAKER – 2 COMPRESSOR UNITS

(One Field Provided Power Supply Circuit to the chiller. Field Connections to Factory Provided Circuit Breaker. No Internal Branch Circuit Protection (Breakers) per Motor Control Center[10].)

MODEL YCAS	VOLTS	SYSTEM #1					SYSTEM #2				
		COMPRESSOR #1		FAN DATA[11, 12]			COMPRESSOR #2		FAN DATA[11,12]		
		RLA	XL-LRA	QTY	FLA (EA.)	LRA (EA)	RLA	XL-LRA	QTY	FLA (EA)	LRA (EA)
0098EB	380	89	681	3	4.8	23.0	89	681	3	4.8	23.0
	460	73	542	3	4.0	19.0	73	542	3	4.0	19.0
	575	59	431	3	3.1	15.2	59	431	3	3.1	15.2
0118EB	380	134	900	3	4.8	23.0	88	681	3	4.8	23.0
	460	111	719	3	4.0	19.0	73	542	3	4.0	19.0
	575	90	574	3	3.1	15.2	59	431	3	3.1	15.2
0128EB	380	122	900	4	4.8	23.0	84	681	4	4.8	23.0
	460	101	719	4	4.0	19.0	69	542	4	4.0	19.0
	575	81	574	4	3.1	15.2	56	431	4	3.1	15.2
0138EB	380	122	900	4	4.8	23.0	122	900	4	4.8	23.0
	460	101	719	4	4.0	19.0	101	719	4	4.0	19.0
	575	81	574	4	3.1	15.2	81	574	4	3.1	15.2
0148EB	380	122	900	4	4.8	23.0	122	900	4	4.8	23.0
	460	101	719	4	4.0	19.0	101	719	4	4.0	19.0
	575	81	574	4	3.1	15.2	81	574	4	3.1	15.2
0158EB	380	168	1093	4	4.8	23.0	122	900	4	4.8	23.0
	460	140	893	4	4.0	19.0	101	719	4	4.0	19.0
	575	111	714	4	3.1	15.2	81	574	4	3.1	15.2
0178EB	380	169	1093	4	4.8	23.0	169	1093	4	4.8	23.0
	460	140	893	4	4.0	19.0	140	893	4	4.0	19.0
	575	111	714	4	3.1	15.2	111	714	4	3.1	15.2
0198EB	380	198	1093	5	4.8	23.0	156	1093	5	4.8	23.0
	460	164	893	5	4.0	19.0	129	893	5	4.0	19.0
	575	131	714	5	3.1	15.2	103	714	5	3.1	15.2
0208EB	380	198	1093	5	4.8	23.0	198	1093	5	4.8	23.0
	460	164	893	5	4.0	19.0	164	893	5	4.0	19.0
	575	131	714	5	3.1	15.2	131	714	5	3.1	15.2

NOTES: Wye-Delta Compressor Start not available with this option.

See page 4 for Electrical Data footnotes.

NOTES:

1. – – – – – – – Dashed Line indicates Field Provided Wiring.
2. The above recommendations are based on the National Electric Code and using copper connectors only. Field wiring must also comply with local codes.

ELECTRICAL DATA (CONT'D)

COMPRESSOR DATA

MAXIMUM kW AND AMPERAGE VALUES FOR DXST COMPRESSORS																		
	COMPRESSOR MODEL AND VOLTAGE CODE																	
	DXS45LA – MOTOR CODE A (B5N, B5E, B6N, B6E)						DXS36LA – MOTOR CODE A (A5N, A5E, A6N, A6E)						DXS24LA – MOTOR CODE (TBD) (C5N, C5E, C6N, C6E)					
VOLTAGE CODE-	-17	-28	-40	-46	-50	-58	-17	-28	-40	-46	-50	-58	-17	-28	-40	-46	-50	-56
MAX kW	150	150	150	150	113	150	150	150	150	150	113	150	105	105	105	105	80	105
MAX AMPS	492	428	259	214	193	171	492	428	259	214	193	171	338	294	178	147	135	118

WIRING DIAGRAM

ACROSS-THE-LINE START

OPTIONAL EQUIPMENT SEE NOTE 7.

035 15164 103
REV F

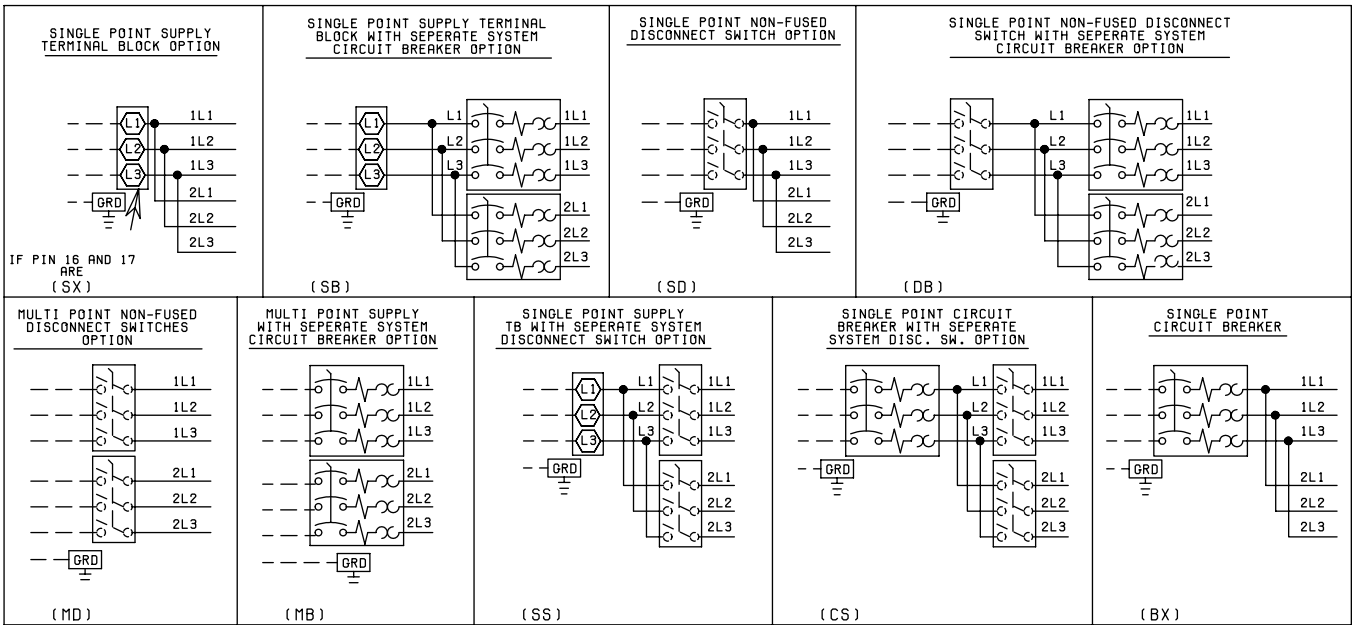

NOTES:

LD09231

1. Field wiring to be in accordance with the current edition of the National Electrical Code as well as all other applicable codes and specifications.
2. Numbers along the right side of a diagram are line identification numbers. The numbers at each line indicate the line number location of relay contacts. An unlined contact location signifies a normally closed contact. Numbers adjacent to circuit lines are the circuit identification numbers.
3. Any customer supplied contacts must be suitable for switching 24VDC. (Gold contacts recommended.) Control Wiring must not be run in the same conduit with any line voltage wiring.
4. To cycle unit on and off automatically with contact shown, install a cycling device in series with the flow switch (FSLW). See Note 3 for contact rating and wiring specifications. Also refer to cautions on page 17.
5. To stop unit (Emergency Stop) with contacts other than those shown, install the stop contact between 5 and 1. If a stop device is not installed, a jumper must be connected between terminals 5 and 1. Device must have a minimum contact rating of 100VA at 115 volts A.C.
6. Alarm contacts are for annunciating alarm/unit malfunction. Contacts are rated at 115V, 100VA, resistive load only, and must be suppressed at load by user.
7. See Installation, Operation and Maintenance Manual when optional equipment is used.
8. Control panel to be securely connected to earth ground.
9. Use 2KVA transformer in optional transformer kit unless there are optional oil separator sump heaters which necessitates using a 3KVA transformer.

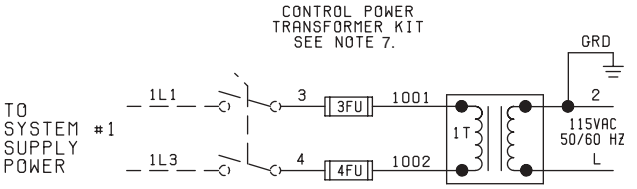

LD09232

LEGEND

T S	Transient Voltage Suppression
⬡	Terminal Block for Customer Connections
△	Terminal Block for Customer Low Voltage (Class 2) Connections. See Note 2
▭	Terminal Block for YORK Connections Only
———	Wiring and Components by YORK
— - - —	Optional Equipment
—— ——	Wiring and/or Components by Others

FIG. 1 – WIRING DIAGRAM – ACROSS-THE-LINE START

WIRING DIAGRAM (CONT'D)

ACROSS-THE-LINE START

035 15164 103
REV F

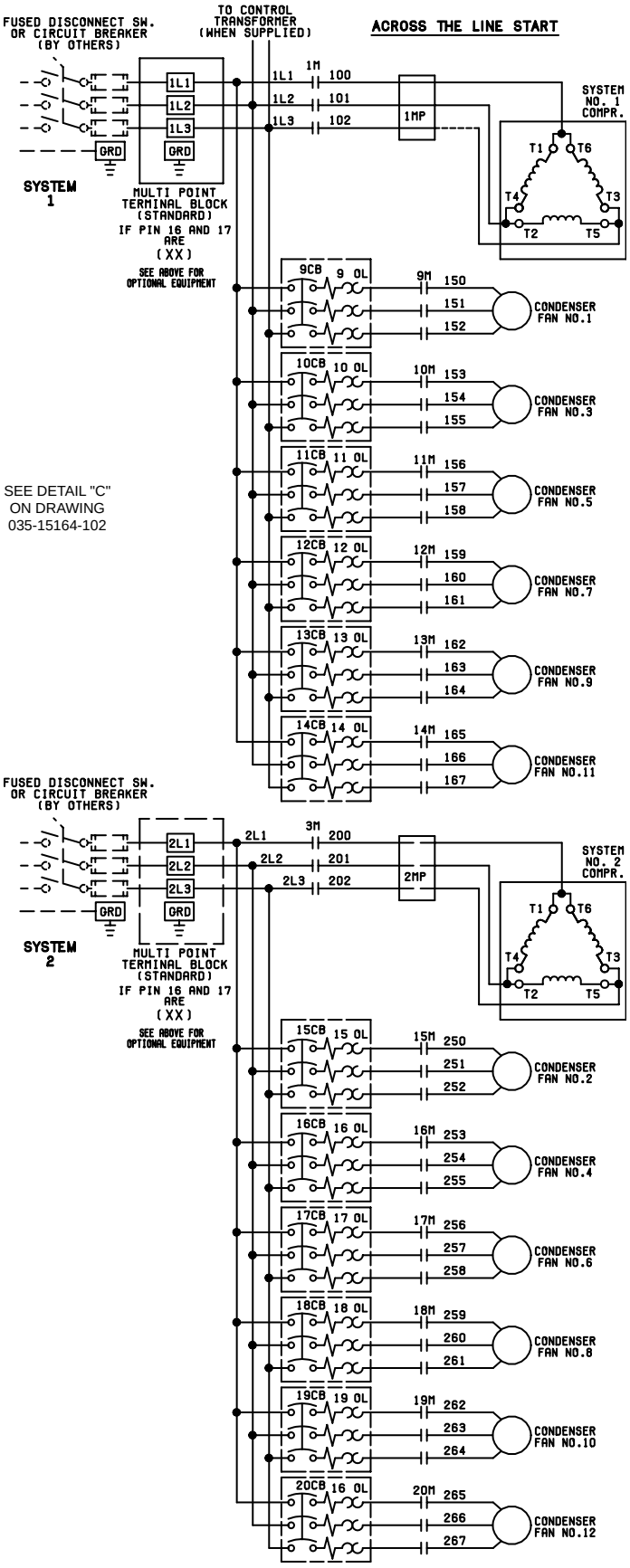

FIG. 2 – WIRING DIAGRAM – ACROSS-THE-LINE START

ELEMENTARY DIAGRAM

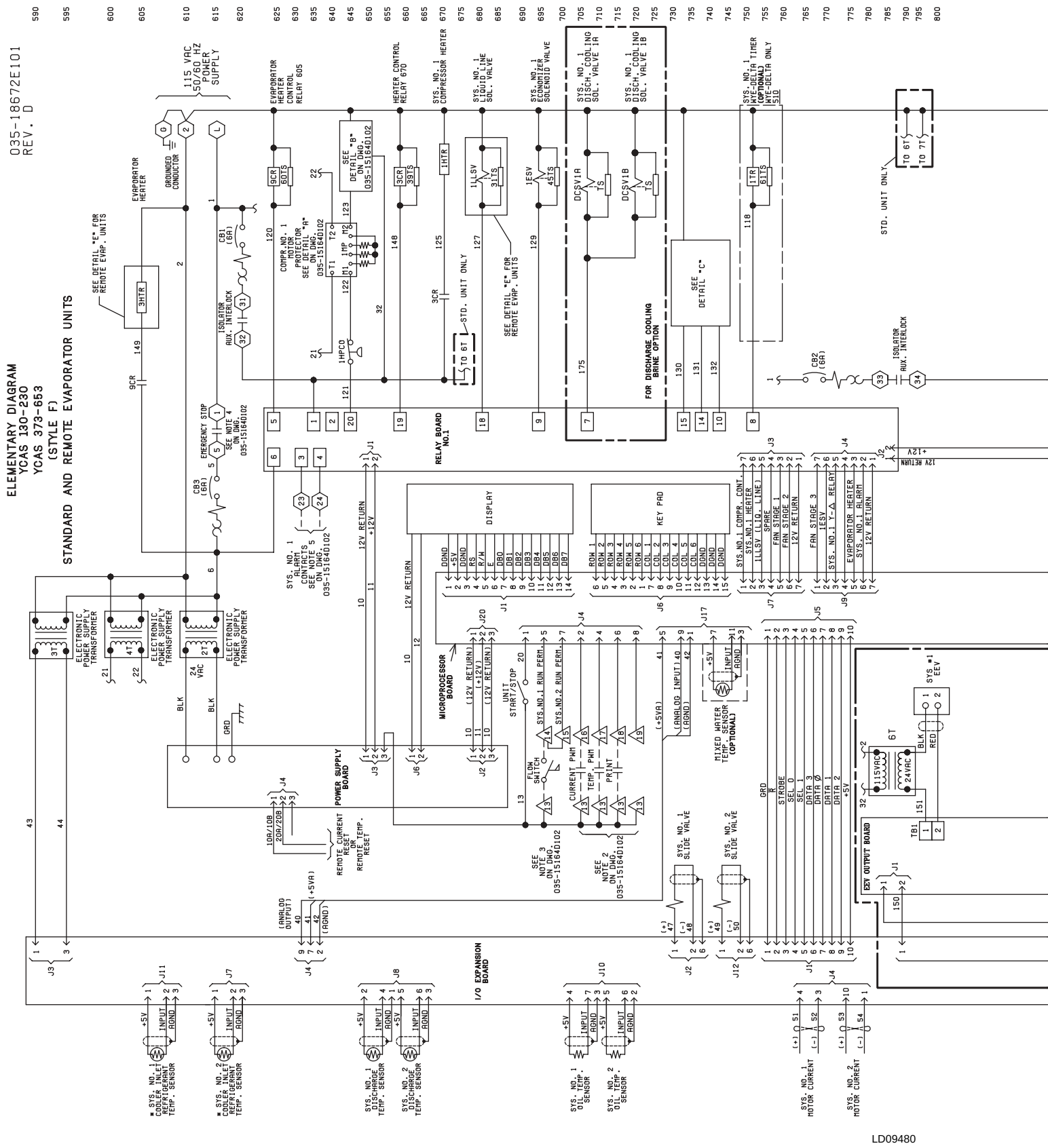

FIG. 3 – ELEMENTARY DIAGRAM – ACROSS-THE-LINE START

ELEMENTARY DIAGRAM (CONT'D)

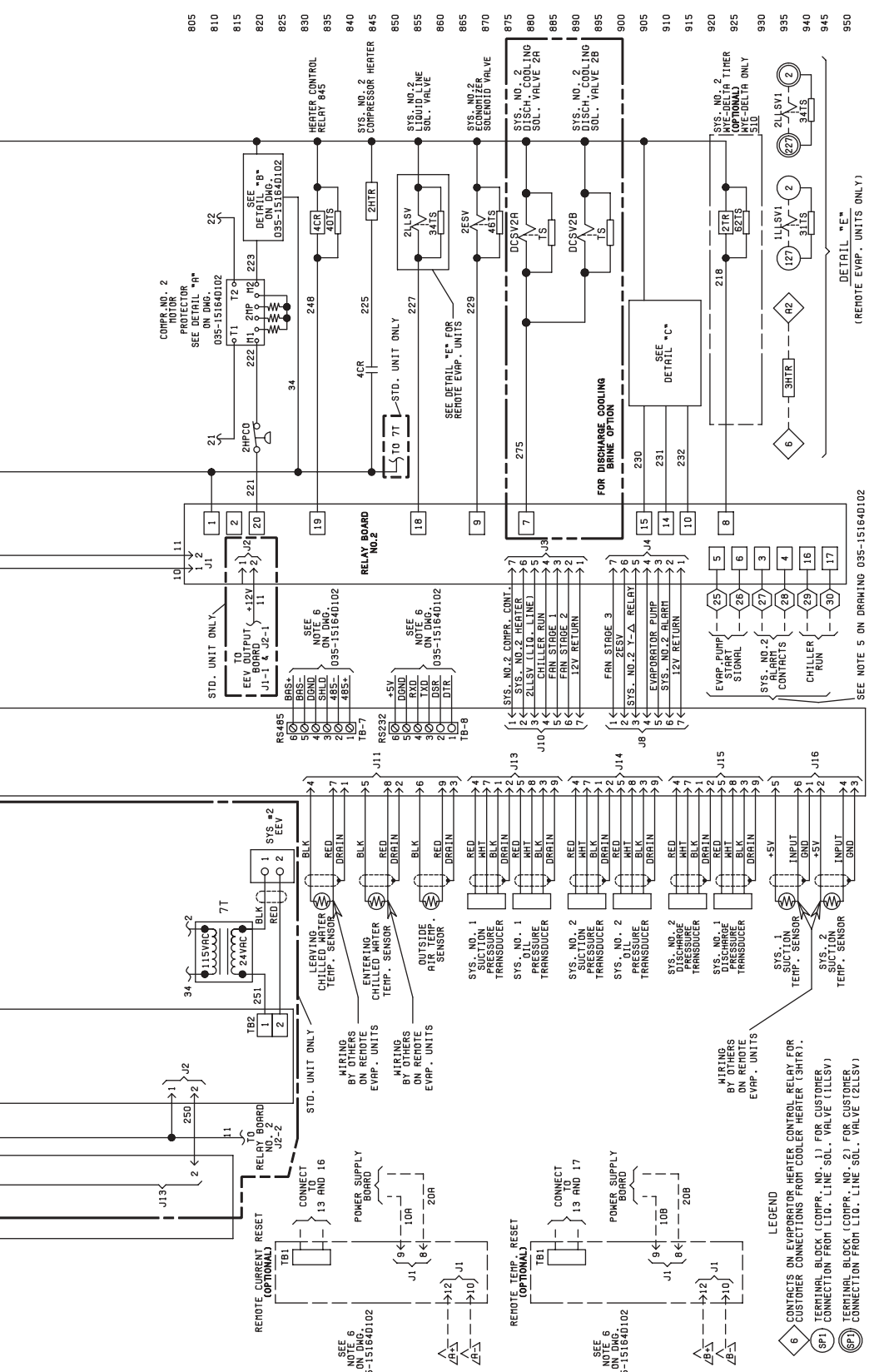

LD09481

CAUTION:
No Controls (relays, etc.) should be mounted in the Smart Panel enclosure or connected to power supplies in the control panel. Additionally, control wiring not connected to the Smart Panel should not be run through the cabinet. This could result in nuisance faults.

CAUTION:
Any inductive devices (relays) wired in series with the flow switch for start/stop, into the Alarm circuitry, or pilot relays for pump starters wired through motor contactor auxiliary contacts must be suppressed with YORK P/N 031-00808-000 suppressor across the relay/contactor coil.

Any contacts connected to flow switch inputs or BAS inputs on terminals 13 - 19 or TB3, or any other terminals, must be suppressed with a YORK P/N 031-00808-000 suppressor across the relay/contactor coil.

CAUTION:
Control wiring connected to the control panel should never be run in the same conduit with power wiring.

CONTROL POWER SUPPLY

UNIT VOLTAGE		CONTROL POWER SUPPLY	MIN CIRCUIT AMP.	MAX DUAL ELEMENT FUSE SIZE	NON-FUSED DISC. SWITCH SIZE
ALL MODELS W/O TRANS.		115-1-50/60	20A	20A 250V	30A 240V
MODELS WITH TRANS. *	-17	200-1-60	15A	15A 250V	30A 240V
	-28	230-1-60	15A	15A 250V	30A 240V
	-46	400-1-60	8A	8A 600V	30A 480V
	-58	575-1-60	8A	8A 600V	30A 600V

* All primary and secondary wiring between transformer and control panel included.

WIRING DIAGRAM

WYE-DELTA START

OPTIONAL EQUIPMENT SEE NOTE 7.

035 15164 103
REV F

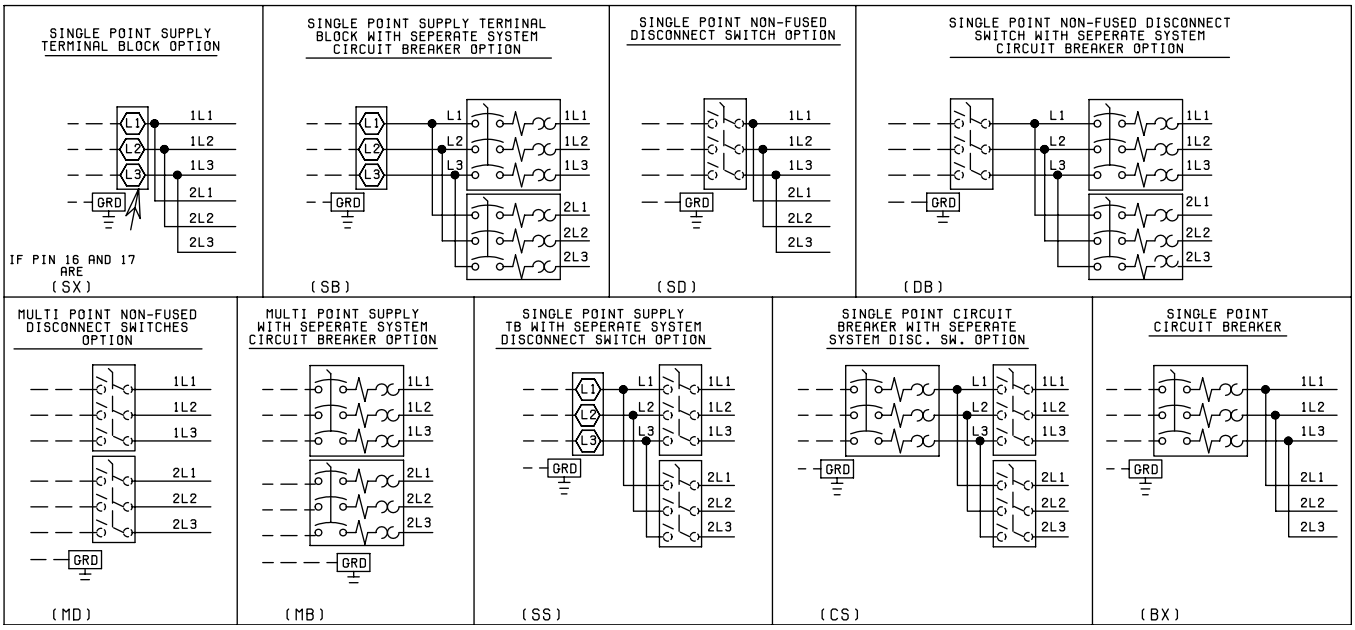

NOTES:

1. Field wiring to be in accordance with the current edition of the National Electrical Code as well as all other applicable codes and specifications.
2. Numbers along the right side of a diagram are line identification numbers. The numbers at each line indicate the line number location of relay contacts. An unlined contact location signifies a normally closed contact. Numbers adjacent to circuit lines are the circuit identification numbers.
3. Any customer supplied contacts must be suitable for switching 24VDC. (Gold contacts recommended.) Control Wiring must not be run in the same conduit with any line voltage wiring.
4. To cycle unit on and off automatically with contact shown, install a cycling device in series with the flow switch (FSLW). See Note 3 for contact rating and wiring specifications. Also refer to cautions on page 21.
5. To stop unit (Emergency Stop) with contacts other than those shown, install the stop contact between 5 and 1. If a stop device is not installed, a jumper must be connected between terminals 5 and 1. Device must have a minimum contact rating of 100VA at 115 volts A.C.
6. Alarm contacts are for annunciating alarm/unit malfunction. Contacts are rated at 115V, 100VA, resistive load only, and must be suppressed at load by user.
7. See Installation, Operation and Maintenance Manual when optional equipment is used.
8. Control panel to be securely connected to earth ground.

LD09231

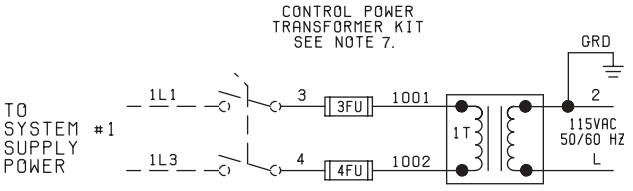

LD09232

LEGEND

T S	Transient Voltage Suppression
⬡	Terminal Block for Customer Connections
△	Terminal Block for Customer Low Voltage (Class 2) Connections. See Note 2
▭	Terminal Block for YORK Connections Only
———	Wiring and Components by YORK
— — —	Optional Equipment
—— ——	Wiring and/or Components by Others

FIG. 4 – WIRING DIAGRAM – WYE-DELTA START

WIRING DIAGRAM (CONT'D)

WYE-DELTA START

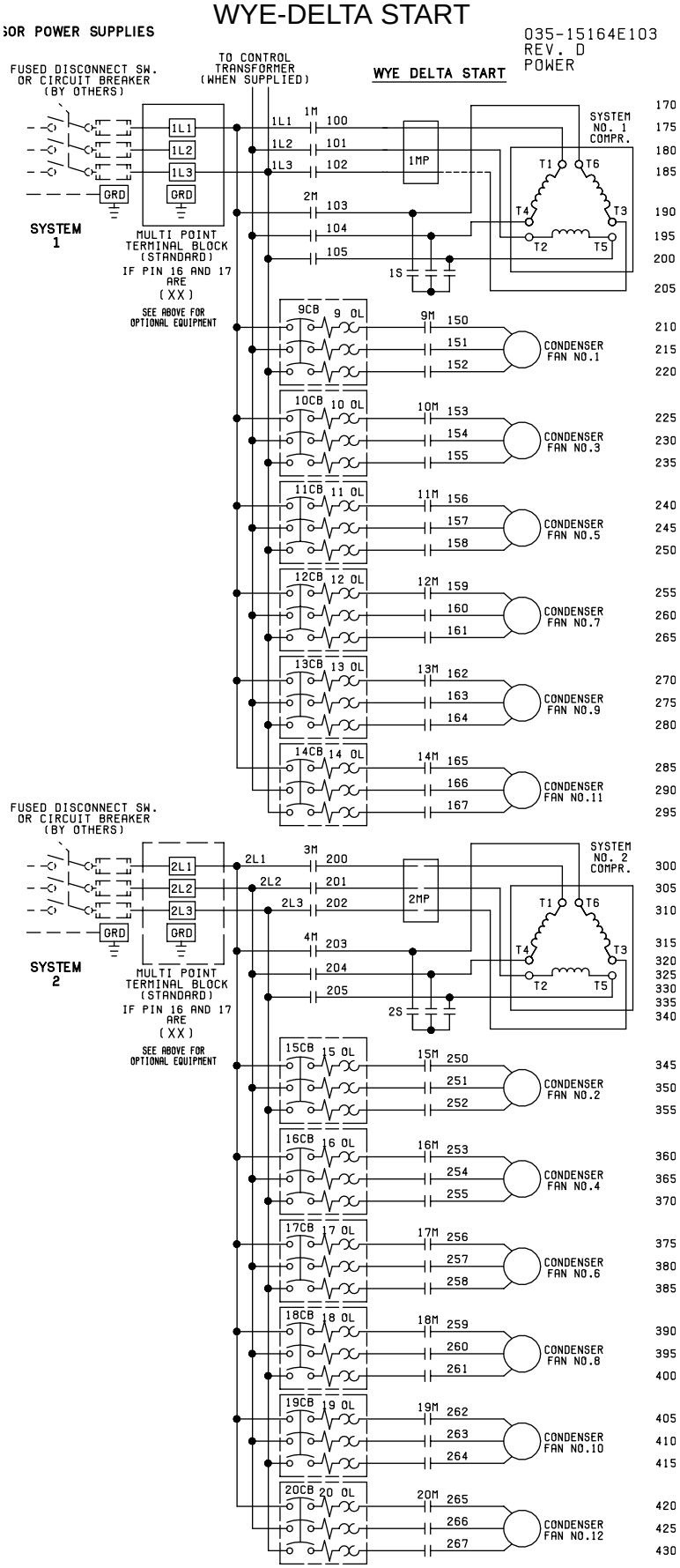

FIG. 5 – ELEMENTARY DIAGRAM – WYE-DELTA START

ELEMENTARY DIAGRAM

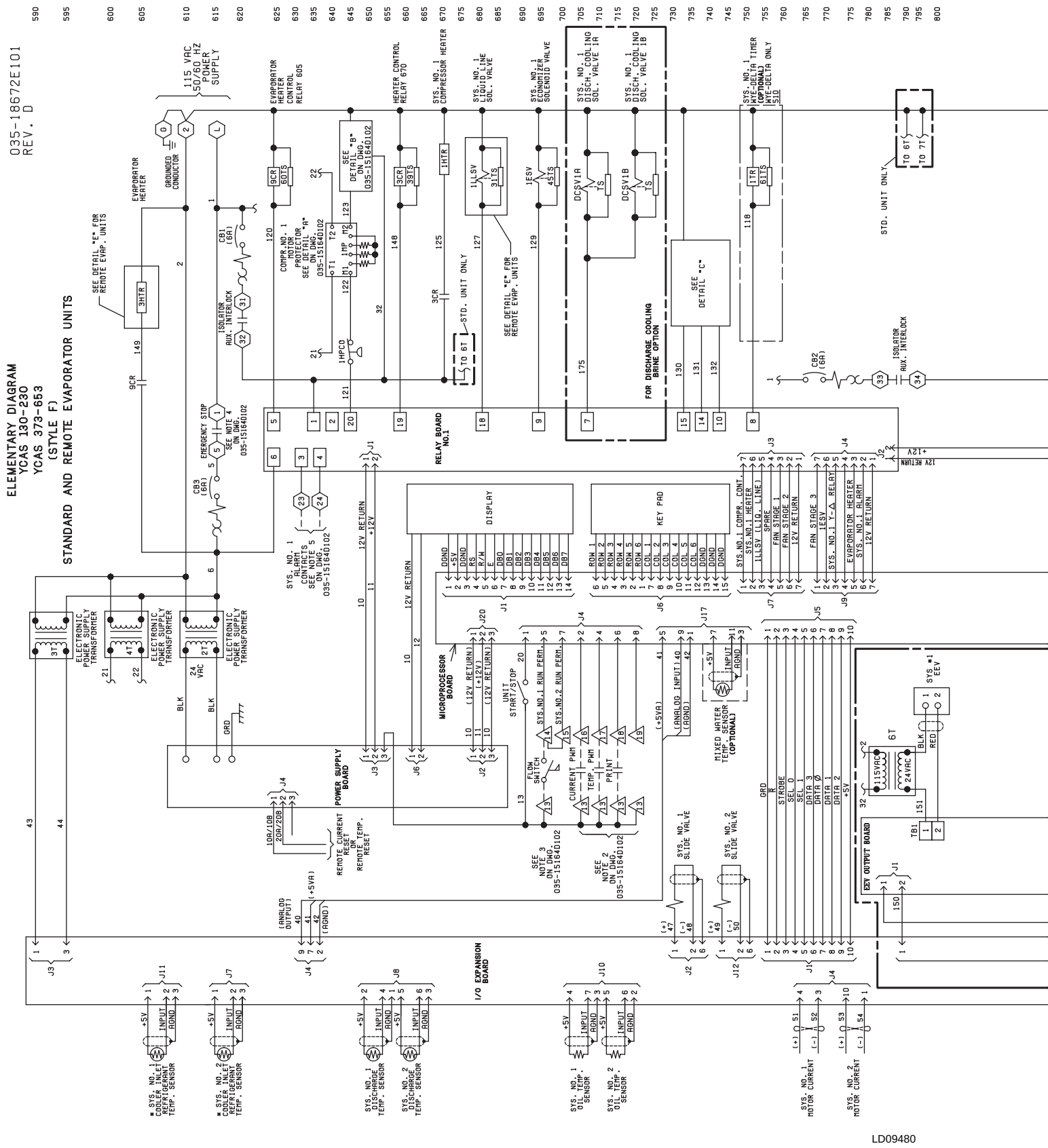

FIG. 6 – ELEMENTARY DIAGRAM – WYE-DELTA START

ELEMENTARY DIAGRAM (CONT'D)

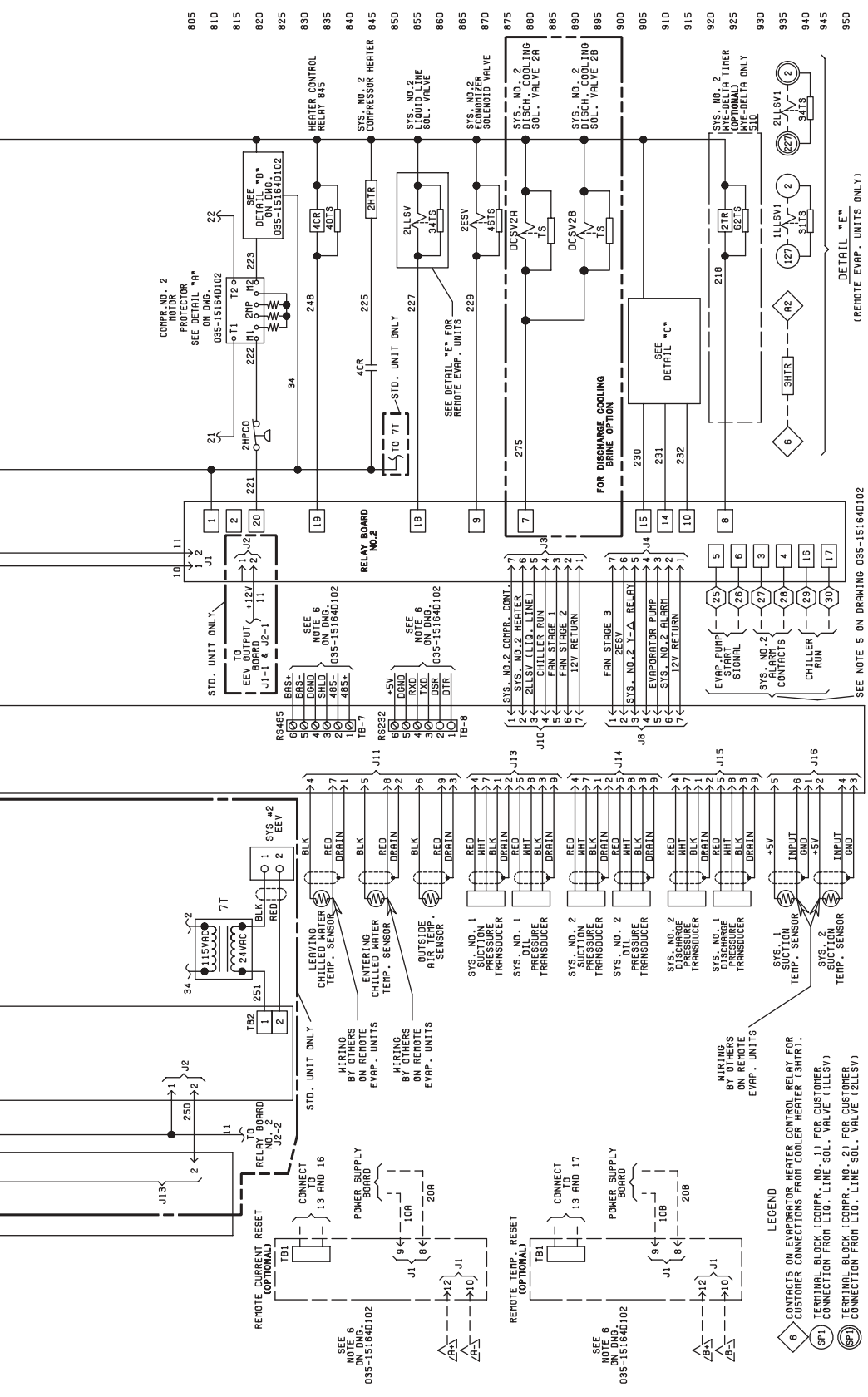

LD09481

CAUTION:
No Controls (relays, etc.) should be mounted in the Smart Panel enclosure or connected to power supplies in the control panel. Additionally, control wiring not connected to the Smart Panel should not be run through the cabinet. This could result in nuisance faults.

CAUTION:
Any inductive devices (relays) wired in series with the flow switch for start/stop, into the Alarm circuitry, or pilot relays for pump starters wired through motor contactor auxiliary contacts must be suppressed with YORK P/N 031-00808-000 suppressor across the relay/contactor coil.

Any contacts connected to flow switch inputs or BAS inputs on terminals 13 - 19 or TB3, or any other terminals, must be suppressed with a YORK P/N 031-00808-000 suppressor across the relay/contactor coil.

CAUTION:
Control wiring connected to the control panel should never be run in the same conduit with power wiring.

CONTROL POWER SUPPLY

UNIT VOLTAGE		CONTROL POWER SUPPLY	MIN CIRCUIT AMP.	MAX DUAL ELEMENT FUSE SIZE	NON-FUSED DISC. SWITCH SIZE
ALL MODELS W/O TRANS.		115-1-50/60	20A	20A 250V	30A 240V
MODELS WITH TRANS. *	-17	200-1-60	15A	15A 250V	30A 240V
	-28	230-1-60	15A	15A 250V	30A 240V
	-46	400-1-60	8A	8A 600V	30A 480V
	-58	575-1-60	8A	8A 600V	30A 600V

* All primary and secondary wiring between transformer and control panel included.

POWER PANEL
(SYSTEM #1)

035 18672 104
REV E

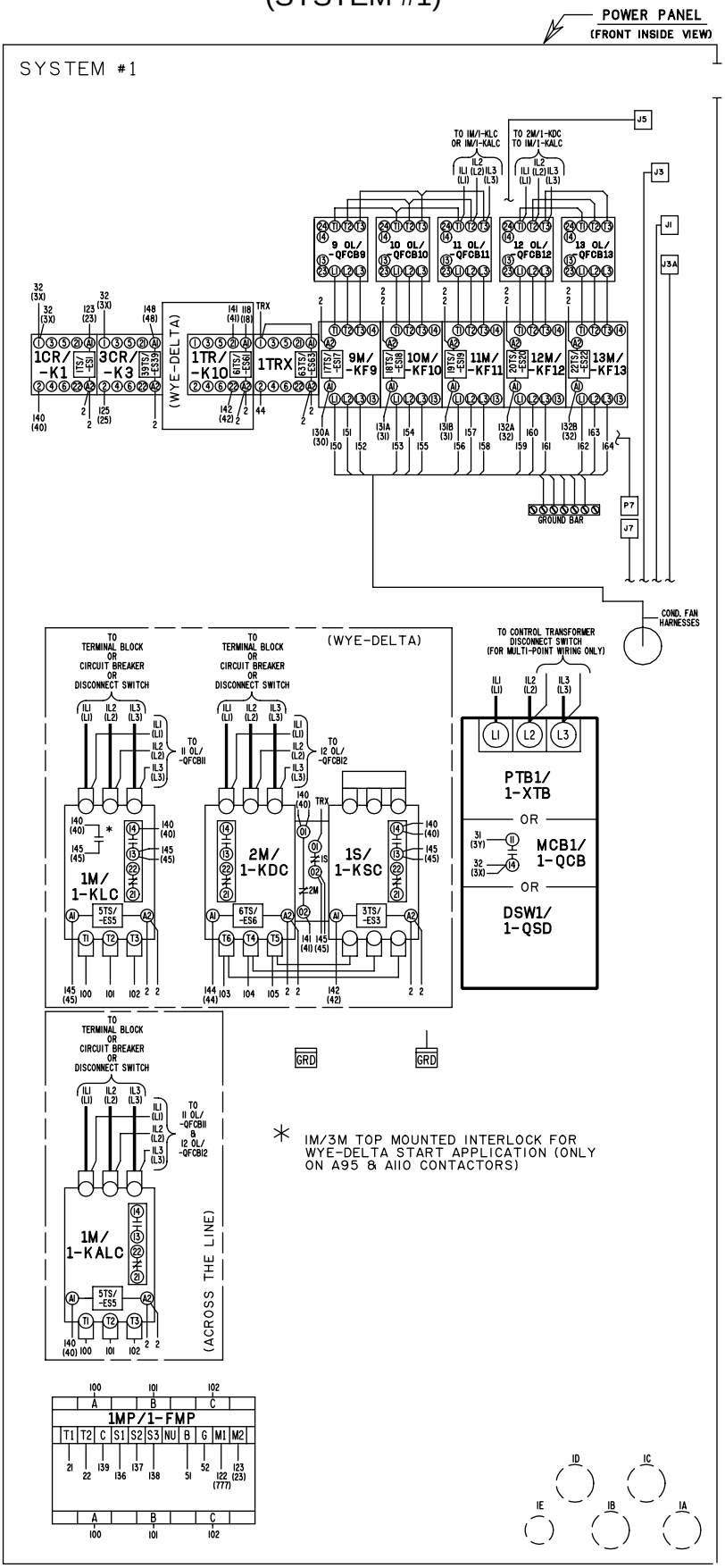

LD09238

FIG. 7 – POWER PANEL (SYSTEM #1) COMPONENT LOCATIONS

CONTROL PANEL

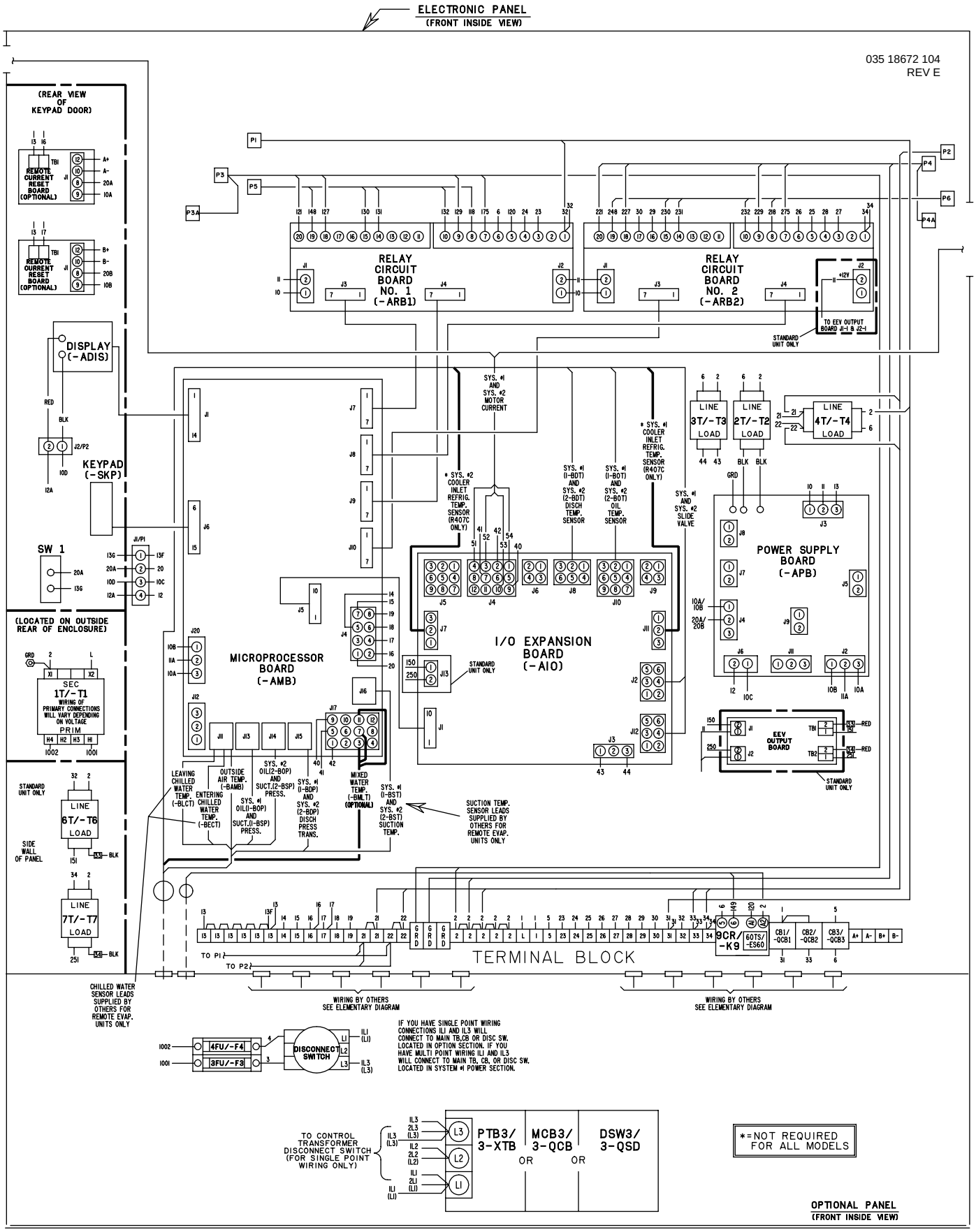

FIG. 8 – CONTROL PANEL COMPONENT LOCATION

LD010026

POWER PANEL
(SYSTEM #2)

035 18672 104
REV E

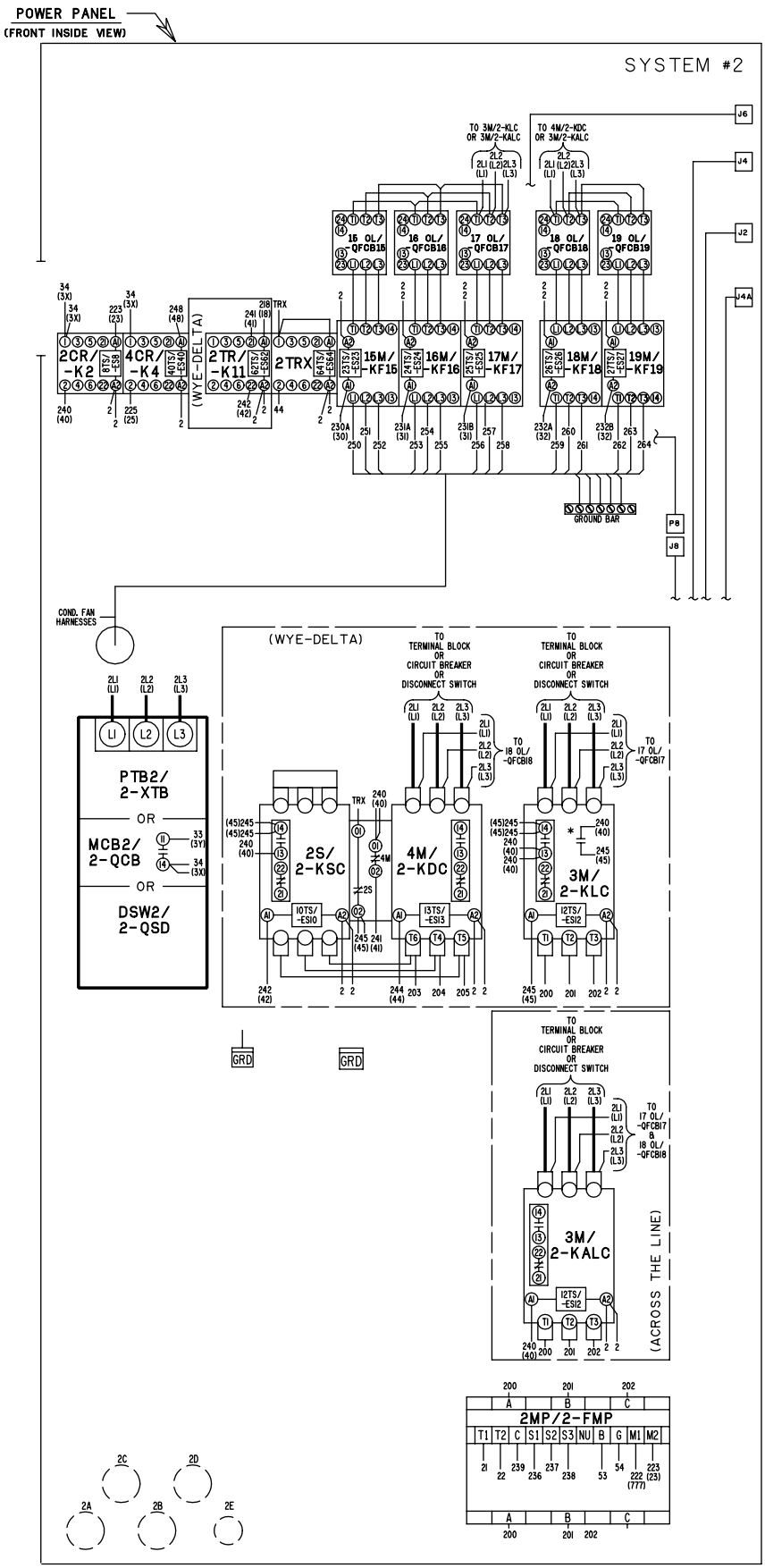

FIG. 9 – POWER PANEL (SYSTEM #2) COMPONENT LOCATIONS

LEGEND

1CR THRU 4CR, 9CR/ -K1 THRU -K4, -K9	-CONTROL RELAYS
CB1, CB2, CB3/ -QCB1,-QBC2,-QCB3	-CIRCUIT BREAKERS
9CB THRU 13CB	-OVERLOAD CIRCUIT BREAKERS (SYS. #1)
15CB THRU 19CB	-OVERLOAD CIRCUIT BREAKERS (SYS. #2)
9 OL THRU 13 OL	-MOTOR OVERLOADS (SYS. #1)
15 OL THRU 19 OL	-MOTOR OVERLOADS (SYS. #2)
-QFCB9 THRU -QFCB13	-MOTOR OVERLOADS W/OVERLOAD CIRCUIT BREAKERS (SYS. #1)
-QFCB15 THRU -QFCB19	-MOTOR OVERLOADS W/OVERLOAD CIRCUIT BREAKERS (SYS. #2)
3FU, 4FU/ -F3, -F4	-TRANSFORMER FUSE **(OPTIONAL)**

LEGEND

1M, 3M/ 1-KLC OR 1-KALC, 2-KLC OR 2-KALC	-COMPRESSOR CONTACTORS
2M, 4M/ 1-KDC, 2-KDC	-COMPRESSOR CONTACTORS
1S, 2S/ 1-KSC, 2-KSC	-COMPRESSOR CONTACTORS
9M THRU 13M/ -KF9 THRU -KF13	-CONDENSER FAN CONTACTORS (SYS. #1)
15M THRU 19M/ -KF15 THRU -KF19	-CONDENSER FAN CONTACTORS (SYS. #2)
1MP/1-FMP	-MOTOR PROTECTOR (SYS. #1)
2MP/2-FMP	-MOTOR PROTECTOR (SYS. #2)
1T/-T1	-CONTROL TRANSFORMER 2KVA **(OPTIONAL)**

2T, 3T, 4T/ -T2, -T3, -T4	-MICRO PANEL TRANSFORMERS
1TR, 2TR/ -K10, -K11	-TIMER RELAYS
TS/-ES	-TRANSIENT SUPPRESSORS
PTB1, PTB2/ 1-XTB, 2-XTB	-POWER TERMINAL BLOCK
MCB1, MCB2/ 1-QCB, 2-QCB	-MOTOR CIRCUIT BREAKER
DSW1, DSW2/ 1-QSD, 2-QSD	-DISCONNECT SERVICE SWITCH
————	-WIRING BY YORK
— — —	-WIRING BY OTHERS
━━━━	-OPTIONAL WIRING AND/OR COMPONENTS

CONNECTION DIAGRAM, ELEC. BOX
YCAS 130-230
YCAS 373-653
(STYLE F)
STANDARD AND REMOTE EVAP. UNITS

035-18672-104
REV. E

J1, J2, J3, J3A, J4, J4A, J5, J6, J7, J8, P7 & P8 — POWER PANEL

P1, P2, P3, P4, P5, & P6 — ELECTRONIC (MICRO) PANEL

NOTE: WIRE NUMBERS IDENTIFIED IN (PARENTHESIS) INDICATE THE ACTUAL HARNESS CODE STAMPED ON THE WIRE.

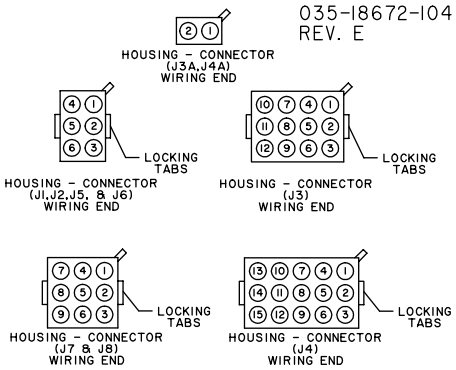

PLUG NO.	WIRE NO.	PLUG PIN NO.
P1	21	1
	2	2
	22	3
	31	4
	32	5

PLUG NO.	WIRE NO.	PLUG PIN NO.
P2	21	1
	2	2
	22	3
	33	4
	34	5

PLUG NO.	WIRE NO.	PLUG PIN NO.
P3	2	1
	GRD	2
	125(25)	4
	129	5
	127	6
	175	7
	121	11
	222(777)	12

PLUG NO.	WIRE NO.	PLUG PIN NO.
P4	2	1
	GRD	2
	225(25)	3
	227	4
	229	5
	275	7
	221	11
	222(777)	12

PLUG NO.	WIRE NO.	PLUG PIN NO.
J1	21	1
	2	2
	22	3
	3Y	4
	3X	5

PLUG NO.	WIRE NO.	PLUG PIN NO.
J2	21	1
	2	2
	22	3
	3Y	4
	3X	5

PLUG NO.	WIRE NO.	PLUG PIN NO.
J3	2	1
	GRD	2
	125A	4
	129A	5
	127A	6
	175A	7
	121A	11
	122	12

PLUG NO.	WIRE NO.	PLUG PIN NO.
J4	2	1
	GRD	2
	225A	3
	227A	4
	229A	5
	275A	7
	221A	11
	222	12

PLUG NO.	WIRE NO.	PLUG PIN NO.
P3A	125	1
	122	2

PLUG NO.	WIRE NO.	PLUG PIN NO.
J3A	25	1
	777	2

PLUG NO.	WIRE NO.	PLUG PIN NO.
P4A	225	1
	225	2

PLUG NO.	WIRE NO.	PLUG PIN NO.
J4A	25	1
	777	2

PLUG NO.	WIRE NO.	PLUG PIN NO.
P5	130	1
	131	2
	132	3
	148	4
	118	6

PLUG NO.	WIRE NO.	PLUG PIN NO.
P6	230	1
	231	2
	232	3
	248	4
	218	6

PLUG NO.	WIRE NO.	PLUG PIN NO.
J5	30	1
	31	2
	32	3
	48	4
	18	6

PLUG NO.	WIRE NO.	PLUG PIN NO.
J6	30	1
	31	2
	32	3
	48	4
	18	6

PLUG NO.	WIRE NO.	PLUG PIN NO.
P7	125	1
	2	2
	123	3
	140	4
	141	5
	142	6
	32	7
	TRX	8
	44	9

PLUG NO.	WIRE NO.	PLUG PIN NO.
P8	225	1
	2	2
	223	3
	240	4
	241	5
	242	6
	34	7
	TRX	8
	44	9

PLUG NO.	WIRE NO.	PLUG PIN NO.
J7	25	1
	2	2
	23	3
	40	4
	41	5
	42	6
	3X	7
	TRX	8
	44	9

PLUG NO.	WIRE NO.	PLUG PIN NO.
J8	25	1
	2	2
	23	3
	40	4
	41	5
	42	6
	3X	7
	TRX	8
	44	9

LD010027

NOTES:

1. FIELD WIRING TO BE IN ACCORDANCE WITH THE CURRENT EDITION OF THE NATIONAL ELECTRICAL CODE AS WELL AS ALL OTHER APPLICABLE CODES AND SPECIFICATIONS.
2. CONTACTS MUST BE SUITABLE FOR SWITCHING 24VDC. (GOLD CONTACTS RECOMMENDED). WIRING SHALL NOT BE RUN IN THE SAME CONDUIT WITH ANY LINE VOLTAGE (CLASS I) WIRING.
3. TO CYCLE UNIT ON AND OFF AUTOMATICALLY WITH CONTACT SHOWN, INSTALL A CYCLING DEVICE IN SERIES WITH THE FLOW SWITCH. SEE NOTE 2 FOR CONTACT RATING AND WIRING SPECIFICATIONS.
4. TO STOP UNIT (EMERGENCY STOP) WITH CONTACTS OTHER THAN THOSE SHOWN, INSTALL THE STOP CONTACT BETWEEN TERMINALS 5 AND 1. IF A STOP DEVICE IS NOT INSTALLED, A JUMPER MUST BE CONNECTED BETWEEN TERMINALS 5 AND 1. DEVICE MUST HAVE A MINIMUM CONTACT RATING OF 6A AT 115VOLTS A.C.
5. CONTACTS ARE RATED AT 115V, 100VA, RESISTIVE LOAD ONLY, AND MUST BE SUPPRESSED AT LOAD BY USER.
6. SEE INSTALLATION, OPERATION AND MAINTENANCE MANUAL WHEN OPTIONAL EQUIPMENT IS USED.

035 15164 102
REV E

LD03282

LEGEND

TS	TRANSIENT VOLTAGE SUPRESSION
⬡	TERMINAL BLOCK FOR CUSTOMER CONNECTIONS
△	TERMINAL BLOCK FOR CUSTOMER LOW VOLTAGE (CLASS 2) CONNECTIONS. SEE NOTE 2.
▭	TERMINAL BLOCK FOR YORK CONNECTIONS ONLY
———	WIRING AND COMPONENTS BY YORK
—— - - ——	OPTIONAL EQUIPMENT
— — — —	WIRING AND/OR COMPONENTS BY OTHERS

LD03283

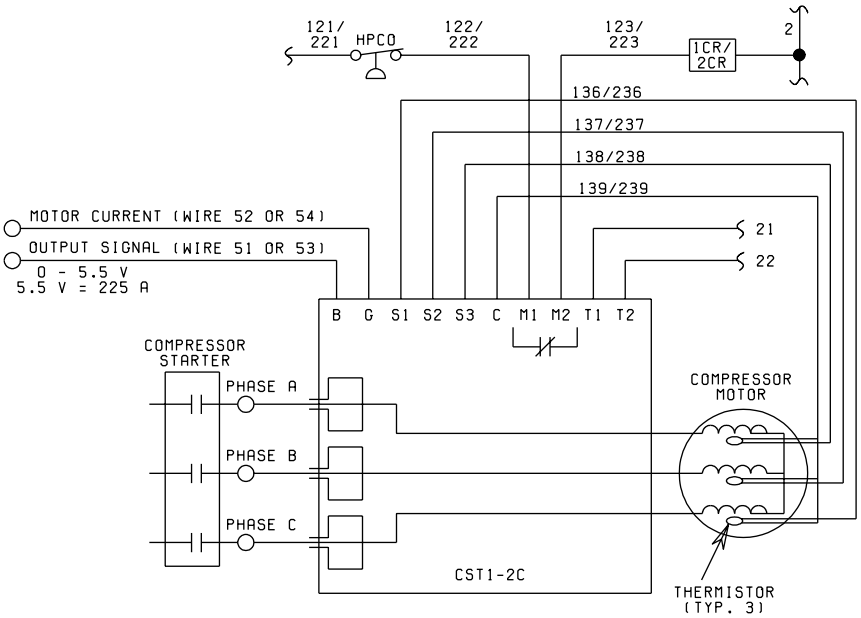

DETAIL "A"

LD03284

CONNECTION DIAGRAM (SYSTEM WIRING)

CONNECTION DIAGRAM SYSTEM WIRING
DXST 2 COMPR.
(R-407C OPTIMIZED)

035-19204D105
REV. A

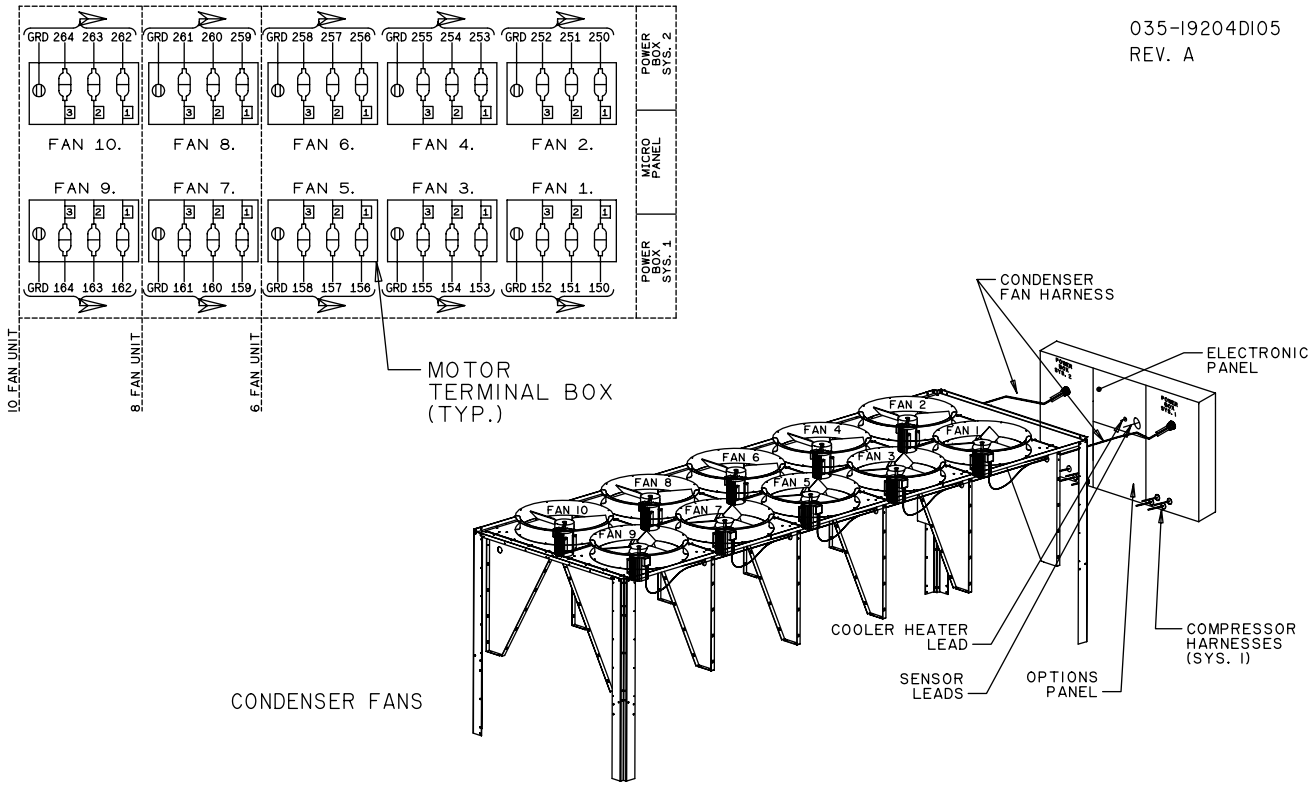

LEGEND

1 HPCO	SYS. No.1 HIGH PRESS. CUTOUT
2 HPCO	SYS. No.2 HIGH PRESS. CUTOUT
1 HTR	SYS. No.1 COMPR. CRANKCASE HEATER
2 HTR	SYS. No.2 COMPR. CRANKCASE HEATER
3 HTR	COOLER HEATER
1 LLSV	SYS. No.1 LIQUID LINE SOLENOID VALVE (UNIT IDENT)
2 LLSV	SYS. No.2 LIQUID LINE SOLENOID VALVE (UNIT IDENT)
TXV 1	SYS. No.1 THERMAL EXPANSION VALVE (UNIT IDENT)
TXV 2	SYS. No.2 THERMAL EXPANSION VALVE (UNIT IDENT)

COOLER

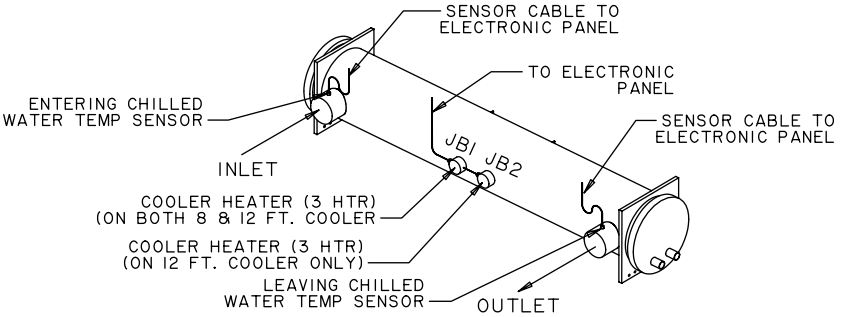

COMPRESSORS A, B OR C (SYSTEMS 1 & 2)

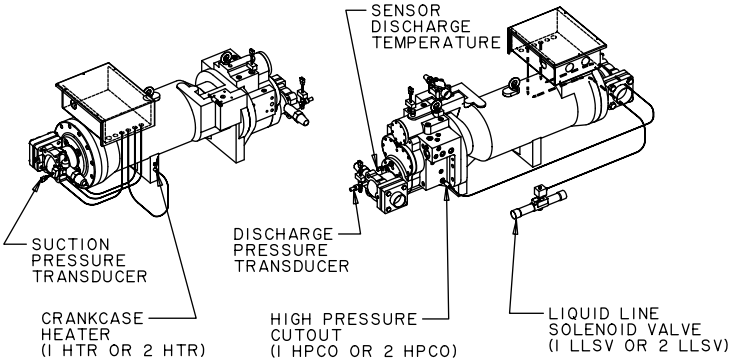

F COMPRESSOR (SYSTEMS 1 & 2)

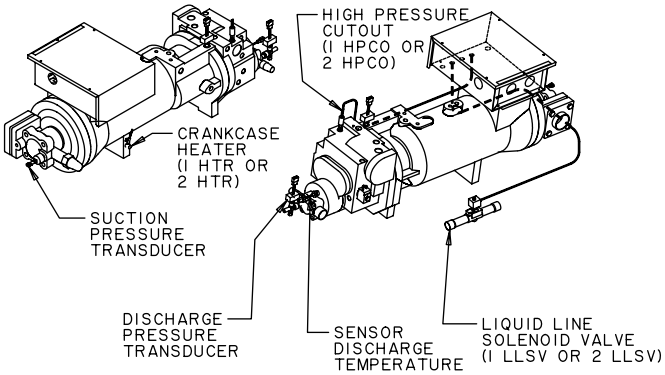

FIG. 10 – CONNECTION DIAGRAM (SYSTEM WIRING)

LD010030

COMPRESSOR TERMINAL BOX

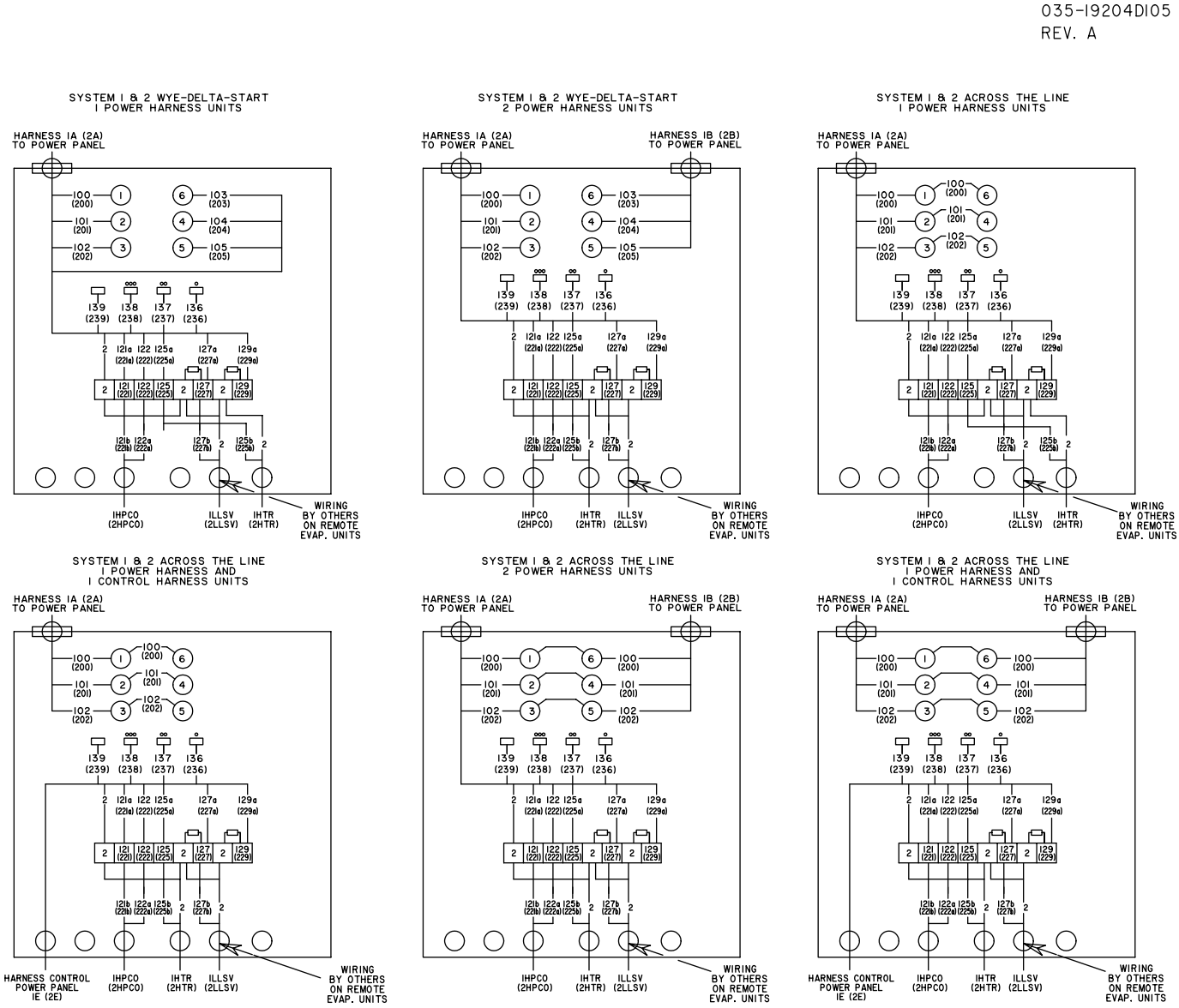

FIG. 11 – COMPRESSOR TERMINAL BOX

LD010029

ELEMENTARY DIAGRAM
STARTER CONTROL CIRCUIT

035 15164 102
REV E

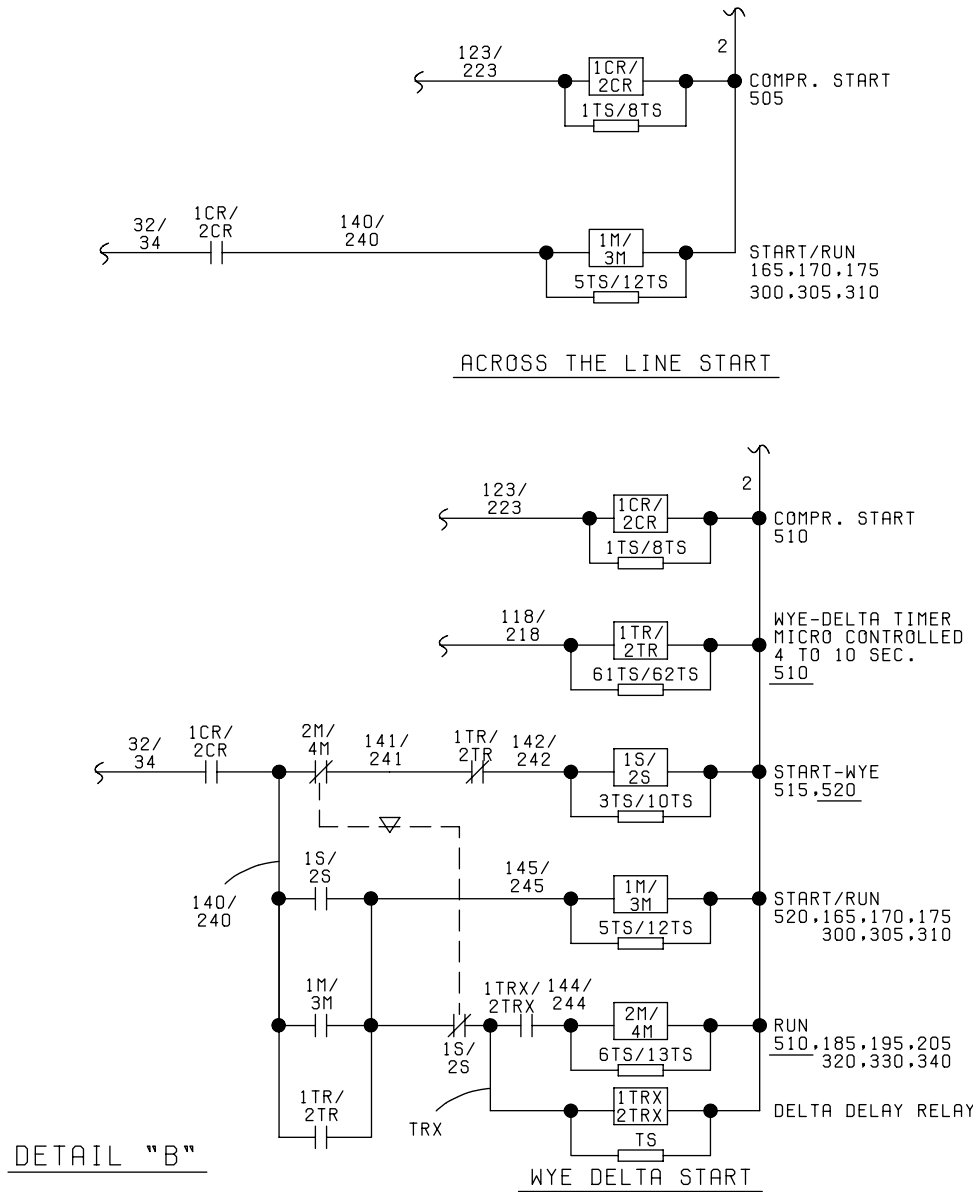

LD010028

FIG. 12 – ELEMENTARY DIAGRAM STARTER CONTROL CIRCUIT

ELEMENTARY DIAGRAM
FAN CONTROL

035 15164 102
REV E

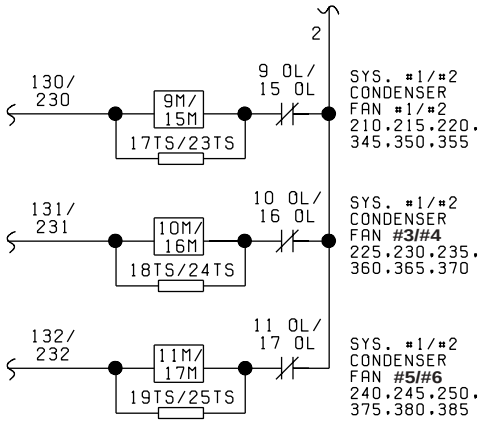

3 FANS PER SYSTEM

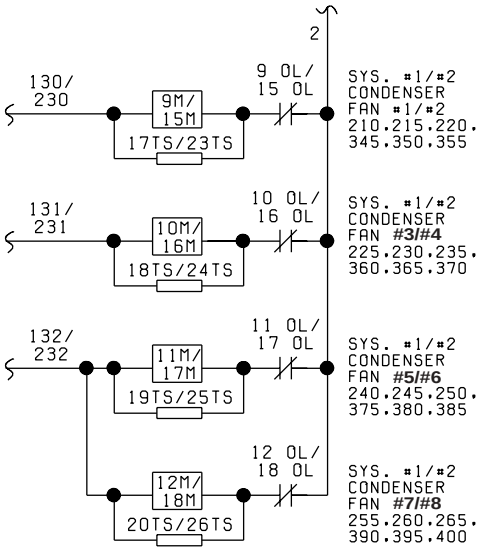

4 FANS PER SYSTEM

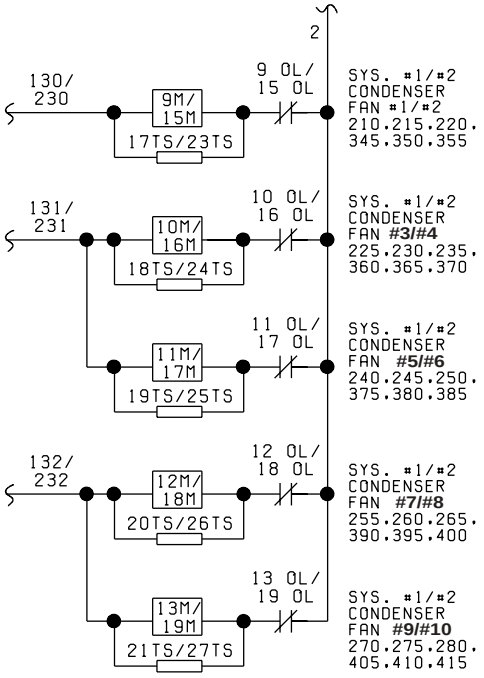

5 FANS PER SYSTEM

DETAIL "C"

SEE ENGINEERING GUIDE OR INSTALLATION, OPERATION AND MAINTENANCE MANUAL FOR NUMBER OF CONDENSER FANS FOR CHILLER MODEL.

LD06840

FIG. 13 – ELEMENTARY DIAGRAM FAN CONTROL CIRCUIT

NOTES

P.O. Box 1592, York, Pennsylvania USA 17405-1592
Tele. 800-861-1001
www.york.com
Subject to change without notice. Printed in USA
Copyright © by York International Corporation 2004
ALL RIGHTS RESERVED
Form 201.19-W5 (1104)
New Release