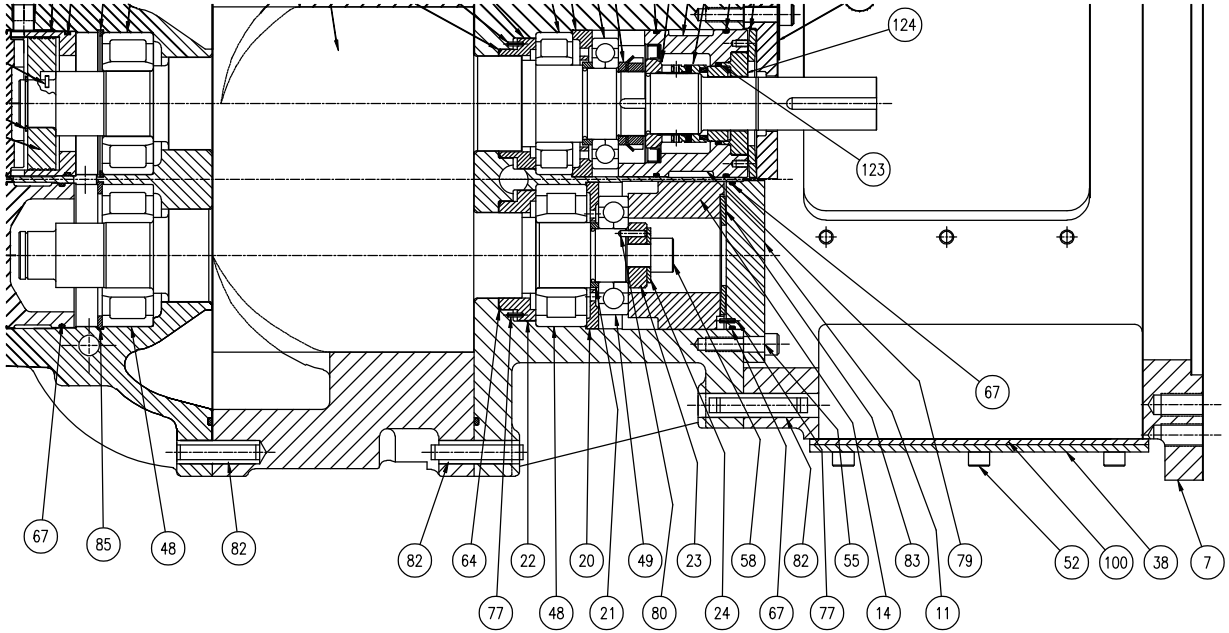

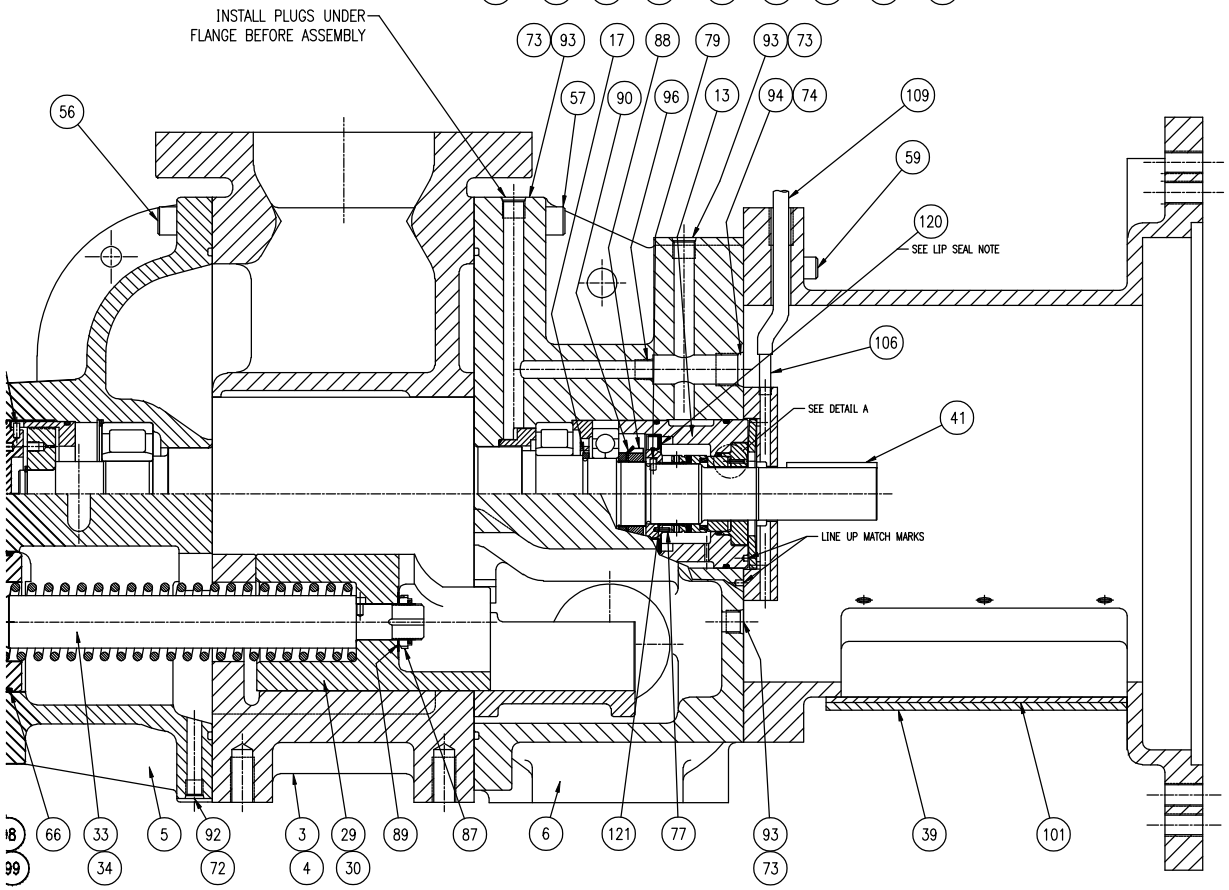

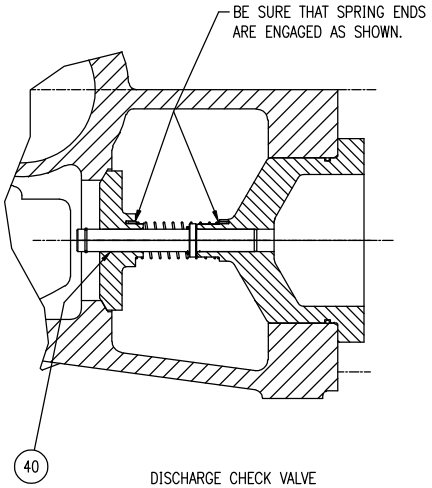

DISCHARGE CHECK VALVE

LIP SEAL NOTE:
BE SURE TO INSTALL LIP SEAL WITH OIL HOLE IN LINE WITH NOTCH IN SEAL HOUSING SPACER ON SAME SIDE AS MATCH MARK ON BOTTOM OF SEAL HOUSING SPACER.

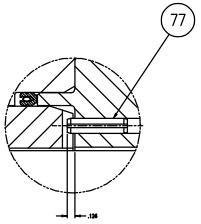

DETAIL A
ENLARGED

ALL SHEETS ARE THE SAME REVISION STATUS

THIRD ANGLE PROJECTION	UNLESS OTHERWISE SPECIFIED DIMENSIONS ARE IN INCHES DO NOT SCALE	York International Refrigeration – Frick Waynesboro, PA 17268	
	UNLESS OTHERWISE SPECIFIED TOLERANCES PER GAP 10	TITLE	COMPRESSOR, SCREW, 163, YCCH
	DEC 3PL ± / DEC 2PL ± / FRACT ± / ANGLE ±		
DR	E. ILGENFRITZ	3/23/95	
CHK	C. M. BEALL JR	3/28/95	
APPD	C. J. BATTLES	3/28/95	
SIZE E	CAGE CODE 23587	DWG NO 534E0513	REV Q
SHEET 1-2		SHEET 1 OF 2	