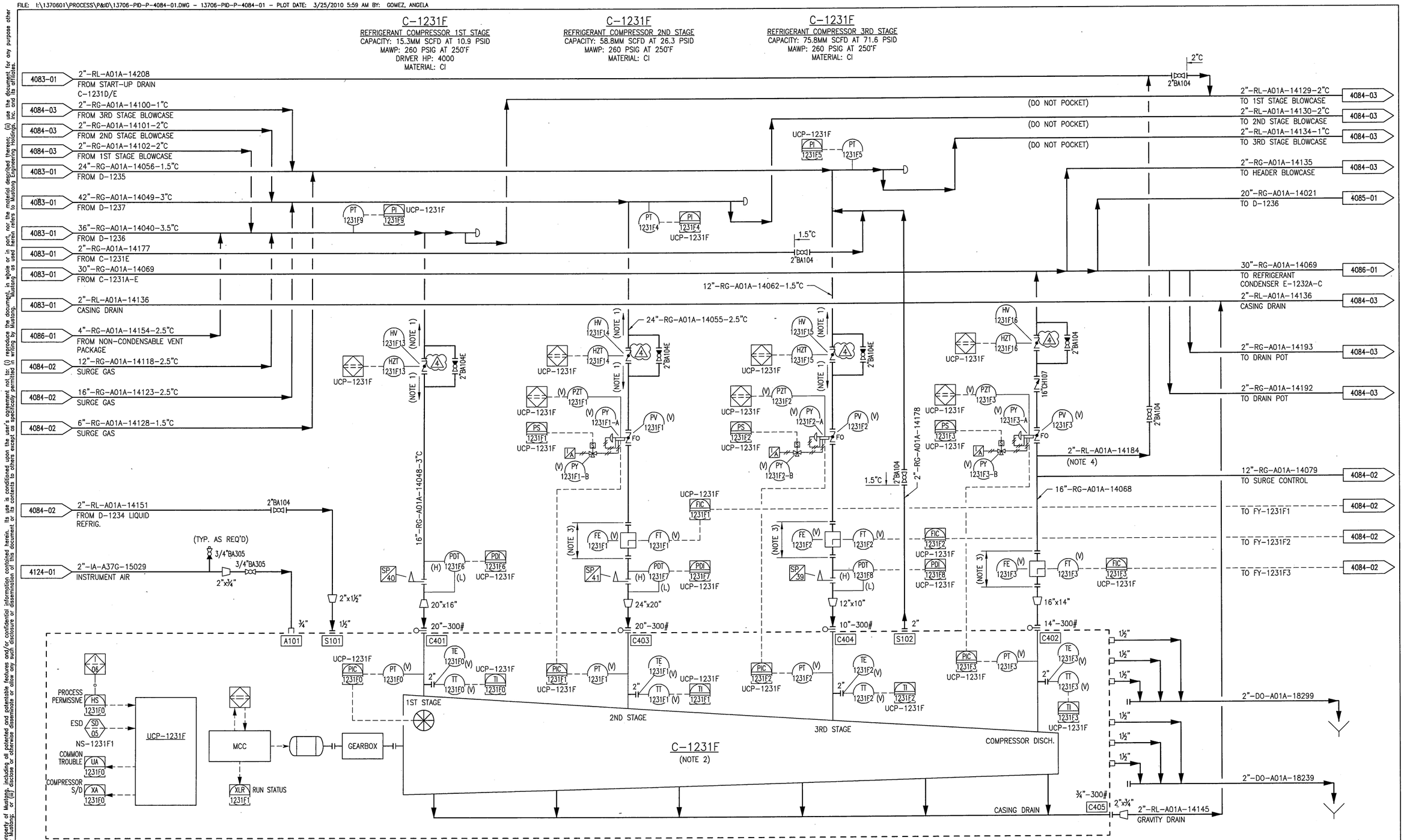

NOTES:
1. PIPING TO BE FREE DRAINING IN DIRECTION INDICATED. NO POCKETS ALLOWED.
2. COMPRESSOR PACKAGE SUCTION AND AUXILIARY PIPING TO BE ELECTRIC TRACED AND/OR INSULATED AT SITE PER VENDOR REQUIREMENT. CASE DOES NOT REQUIRE INSULATION.
3. VENDOR FURNISHED FLANGED METER RUN 13ø LONG.
4. START-UP DRAIN

REV	DATE	BY	DESCRIPTION	CHK	ENGR	APPR	CLIENT
2	04SEP09	AG	RE-ISSUED FOR CONSTRUCTION	DR	RM	PW	
1	17JUL09	JL	RE-ISSUED FOR CONSTRUCTION	DR	RM	PW	
0	11MAY09	AG	ISSUED FOR CONSTRUCTION	DR	RM	PW	
F	20MAR09	AG	ISSUED FOR HAZOP #3	DR	HR	PW	
E	30JAN09	AG	ISSUED FOR HAZOP #2	DR	HR	PW	
D	20NOV08	AG	ISSUED FOR HAZOP	DR	HR	PW	
C	31OCT08	AG	ISSUED FOR DESIGN	DR	HR	PW	
4	31MAR10	AG	RE-ISSUED FOR CONSTRUCTION	DR	RM	PW	
3	05FEB10	AG	RE-ISSUED FOR CONSTRUCTION	DR	RM	PW	

MUSTANG ENGINEERING, L.P.

PROJECT NO:	1370601	
DESIGNED BY:		
DRAWN BY:	R. GOFF	18SEP08
CHECKED BY:	D. RICHERT	
APPROVED BY:		
SCALE:	NONE	DATE

SANDRIDGE CENTURY GAS PLANT

PIPING & INSTRUMENT DIAGRAM
REFRIGERANT COMPRESSOR C-1231F

DRAWING NO: 13706-PID-P-4084-01 REV: 4

BASED ON DWG-ENG-1104 REV 2

This document is the sole and exclusive property of Mustang, including all patented and patentable features and/or confidential information contained herein. Its use is conditioned upon the user's agreement not to: (i) reproduce the document, in whole or in part, nor the material described thereon; (ii) use the document for any purpose other than as specifically permitted in writing by Mustang; or (iii) disclose or otherwise disseminate or allow any such disclosure or dissemination of this document or its contents to others except as specifically permitted in writing by Mustang. "Mustang" as used herein refers to Mustang Engineering Holdings, Inc. and its affiliates.