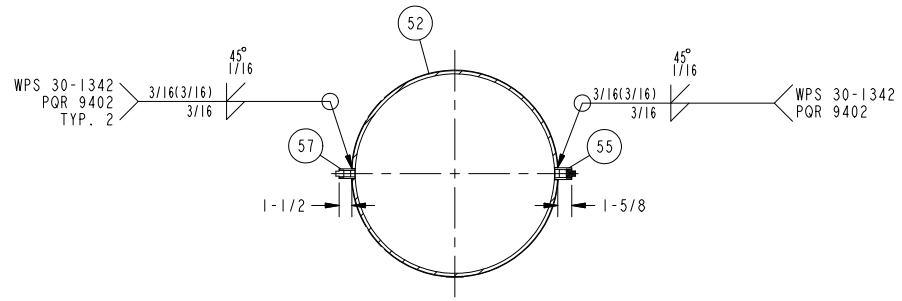

SECTION J-J

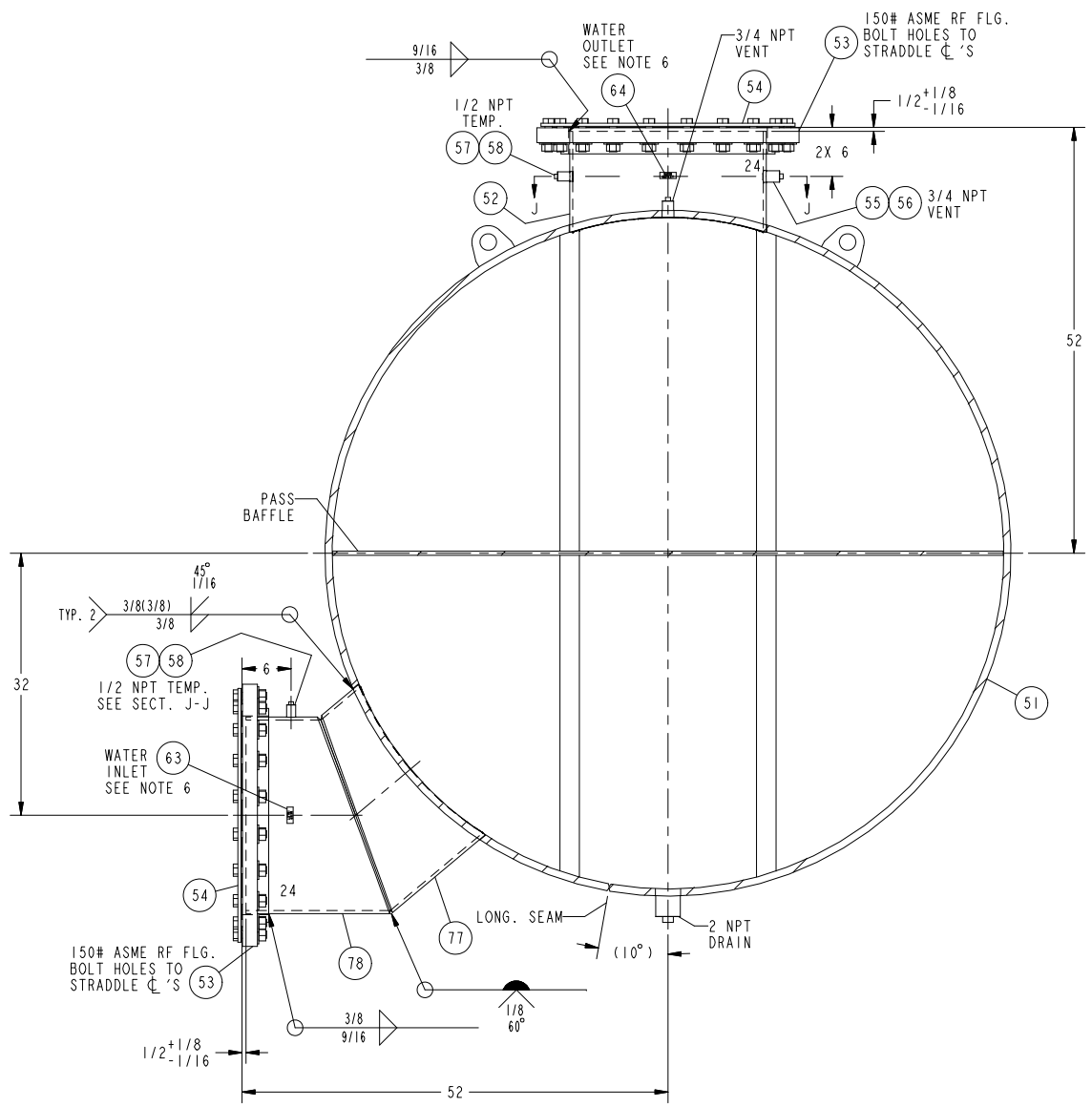

SECTION D-D

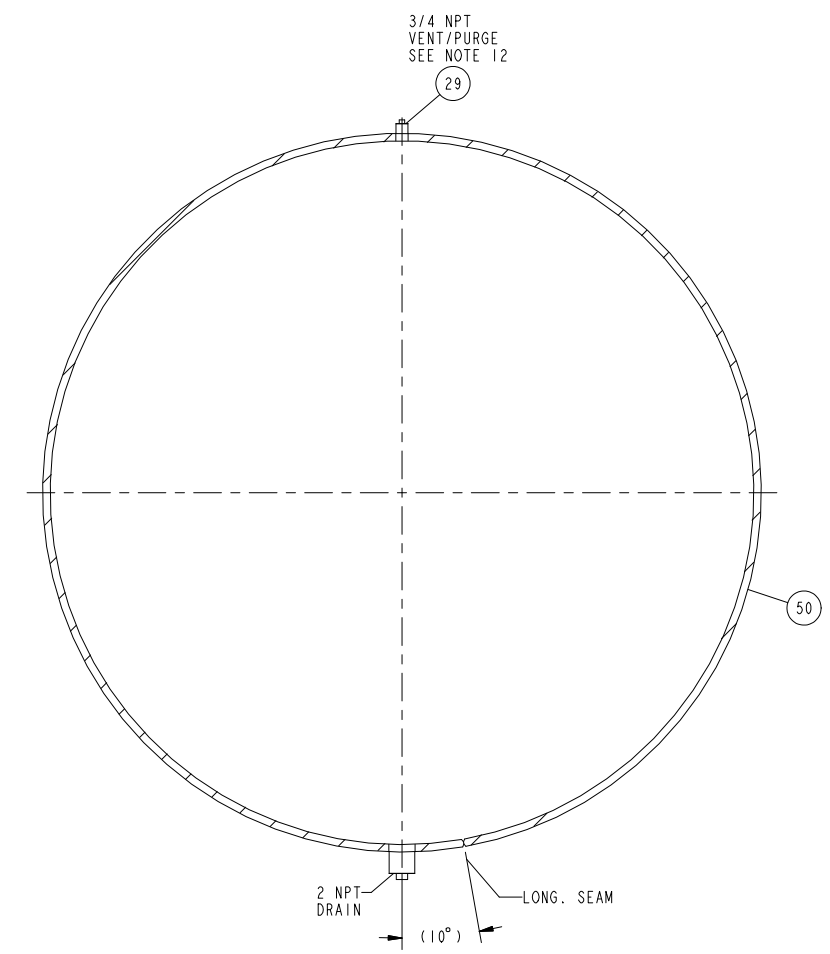

SECTION E-E

REVISION						
REV.	DATE	EC. NO.	DR.	CHK.	ENG.	
G	04-APR-2011	CS11-0208	KLS	KLS		
REVISED ITEM 9, WAS 023-09995-000.						

CONTINUED

"ALL PROPRIETARY RIGHTS IN THE SUBJECT MATTER HEREOF ARE RESERVED AND NO PERMISSION IS GRANTED TO REPRODUCE THIS PRINT IN WHOLE OR IN ANY PART, OR DISCLOSE ANY OF THE INFORMATION UPON IT TO OTHERS WITHOUT WRITTEN RELEASE BY YORK INTERNATIONAL CORPORATION"

THIRD ANGLE

YORK INTERNATIONAL

YORK INTERNATIONAL CORPORATION
YORK, PA 17405

DIMENSIONS ARE IN INCHES
DO NOT SCALE
TOLERANCES PER ENG. STD. M-282

DRAWN	K.L.SEIPLE	30-SEP-2010
MODELER	K.L.SEIPLE	30-SEP-2010
CHKD	K.L.SEIPLE	07-OCT-2010
ENG		

SCALE: .012 WEIGHT:

DWG-CONDENSER
82 ID X 18 LG Y CL B
2 PASS, 4948 TUBES
300/150 DWP TITAN

MATERIAL
ENG. STD.
PART NO.
CUT SIZE

D | CAGE NUMBER 66935 | DRAWING NUMBER 077-31991-000 | REVISION G | VERSION 0

ORIG. NO.: 077-14994D REV. - | SHEET 4 OF 4 | RELEASED