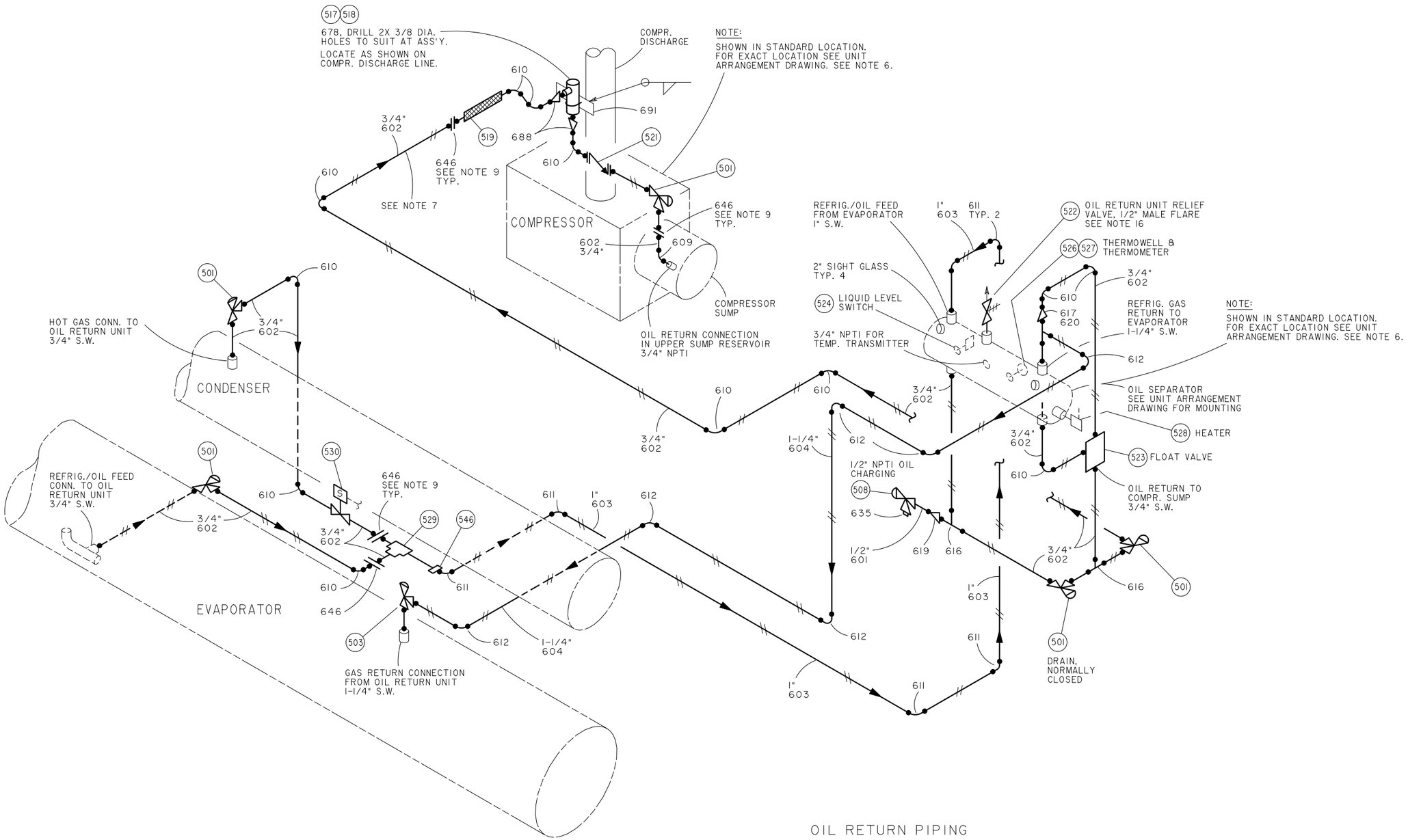

OIL RETURN PIPING

REV. LEV.	DATE	REVISION RECORD	CHG. NO.	DR.	CK.
–		NEW	CS10 0365		
A	12-22-10	CHANGED TO OM-5090 IN TITLE.	CS10 0523	MEB	MEB

REV. LEV.	DATE	REVISION RECORD	CHG. NO.	DR.	CK.

REV. LEV.	DATE	REVISION RECORD	CHG. NO.	DR.	CK.

"ALL PROPRIETARY RIGHTS IN THE SUBJECT MATTER HEREOF ARE RESERVED. AND NO PERMISSION IS GRANTED TO REPRODUCE THIS PRINT IN WHOLE OR IN PART, OR DISCLOSE ANY OF THE INFORMATION UPON IT TO OTHERS WITHOUT WRITTEN RELEASE BY YORK INTERNATIONAL CORPORATION".

YORK INTERNATIONAL CORPORATION
YORK, PA. 17405

DIMENSIONS ARE IN INCHES
DO NOT SCALE
TOLERANCES PER ENG. STD. M-282
WELDING PER ENG. STD. M-30
REF. DWG.

KIT, PIPING, SYSTEM
OM - 5090
REFRIGERANT - 134a
NEMA - 1

MATERIAL
TYPE _____ ENG. STD. _____
PART NO. _____
CUT SIZE _____

NAME	DATE
DR. M E BAUGHMAN	09-22-10
APPR. M E BAUGHMAN	09-24-10
SCALE: NTS	

SIZE: D
CAGE NO: 66935
DRAWING NUMBER: 023-25214-002

WT. = LBS.
ORIG. NO. 023-25214-002
SHEET 3 OF 5

12-22-10 11:12
CS.2010.0J060251.KIT.023-25214-002.SHT3