M Compressor Training Introduction

7153DV001

REFRIGRATION BASIC

M COMPRESSOR BASIC

M COMPRESSOR INSTALLATION

M COMPRESSOR STARTUP

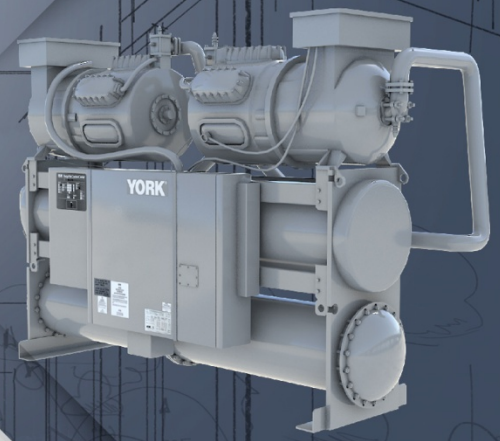

Copyright 2017 by Johnson Controls, Inc

Our Policy prohibits printing. Save GREEN.

Agenda

- Introduction
- Stall and Surge Basics
- M Compressor_Components

Day 1
Day 2
Day 3
Day 4
Day 5

Resources

Copyright 2017 by Johnson Controls, Inc

Agenda

M Compressor_
Lubrication System

M Compressor_
Operation and Controls

Copyright 2017 by Johnson Controls, Inc

Day 1
Day 2
Day 3
Day 4
Day 5

Resources

Agenda

M Compressor_
Site Preparation

M Compressor_Assembly

Copyright 2017 by Johnson Controls, Inc

Day 1
Day 2
Day 3
Day 4
Day 5

Resources

Agenda

M Compressor_Alignment



M Compressor_
Startup Comissioning



Copyright 2017 by Johnson Controls, Inc

Day 1

Day 2

Day 3

Day 4

Day 5

Resources

Lessons Resources

Agenda

M Compressor_
Service Guidelines



Copyright 2017 by Johnson Controls, Inc

Day 1

Day 2

Day 3

Day 4

Day 5

Resources

Resources


Video


Handouts


Drawings


Technical Documentation


Scratch Pad

Copyright 2017 by Johnson Controls, Inc

Day 1
Day 2
Day 3
Day 4
Day 5
Resources

Lessons
Resources

Video

Refrigeration Cycle Animation_1980_Part A

Refrigeration Cycle Animation_1980_Part B

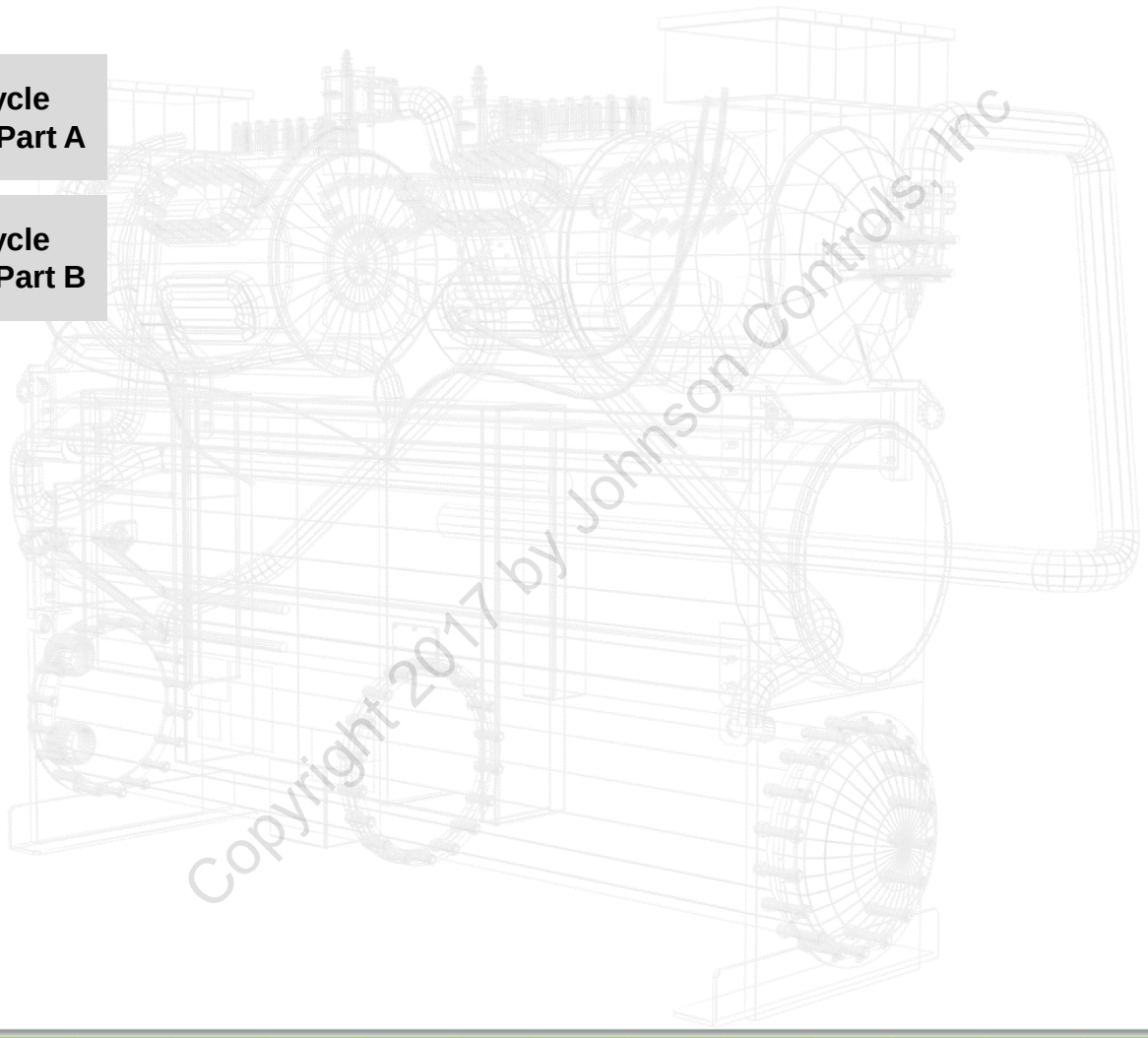

Copyright 2017 by Johnson Controls, Inc

Day 1

Day 2

Day 3

Day 4

Day 5

Resources

Handouts

- Alignment Instructions
- Compressor Bearing Assembly Log
- Form 160_ Align_Dowelling
- IM-232, HC-4291 INSTRUCTION MANUALRiverhawk
- IOM_Ops_job+Spec – Fixed Speed Chillers
- IOM_Ops_Man – Fixed Speed Chillers
- Kenitrol Positioner
- Kenitrol
- M Comp seal overfeed rates
- M_COMP_ Amereiflex_Coupling
- RIM and Face Method

Copyright 2017 by Johnson Controls, Inc

Drawings

ANCILLARY PIPING	CONDENSER	EVAPORATOR	REFERENCE DRAWINGS
023-25214-001	077-31991-000-sht1	077-31990-000-sht1	076-78525-000, 077-31585-000 Ref&Water Flow
023-25214-002-sht1	077-31991-000-sht2	077-31990-000-sht2	
023-25214-002-sht2	077-31991-000-sht3	077-31990-000-sht3	077-25017-000-rigging
023-25214-002-sht3	077-31991-000-sht4	077-31990-000-sht4	077-32079-000 Driveline
023-25214-002-sht4	INTERCOOLER	077-31990-000-sht5	077-32303-000 Unit Drawings
023-25214-002-sht5	077-31992-000-sht1	Compressor Alignment	081-17944-000 Compressor oil flow
023-25214-003	077-31992-000-sht2	M-Comp_Align	081-17974-000, 081-17976-000 Compressor&Coupling
	Oil Still		
	077-16813-000 - Oil Still		

Copyright 2017 by Johnson Controls Inc

Day 1
Day 2
Day 3
Day 4
Day 5

Resources

Technical Documentation

160.71-N1.1	160.72-rp1
160.71-n2	220.10-nm1__supl._1
160.71-nm3	220.11-nm1__sb1
160.71-no1.2	220.11-nm1__sb2
160.71-o1	220.11-nm1__sb3
160.71-su1	220.11-nm2
160.72-cl1	160.72-cl2
160.72-m1	
160.72-n1	
160.72-o1	

Copyright 2017 by Johnson Controls, Inc

Introduction

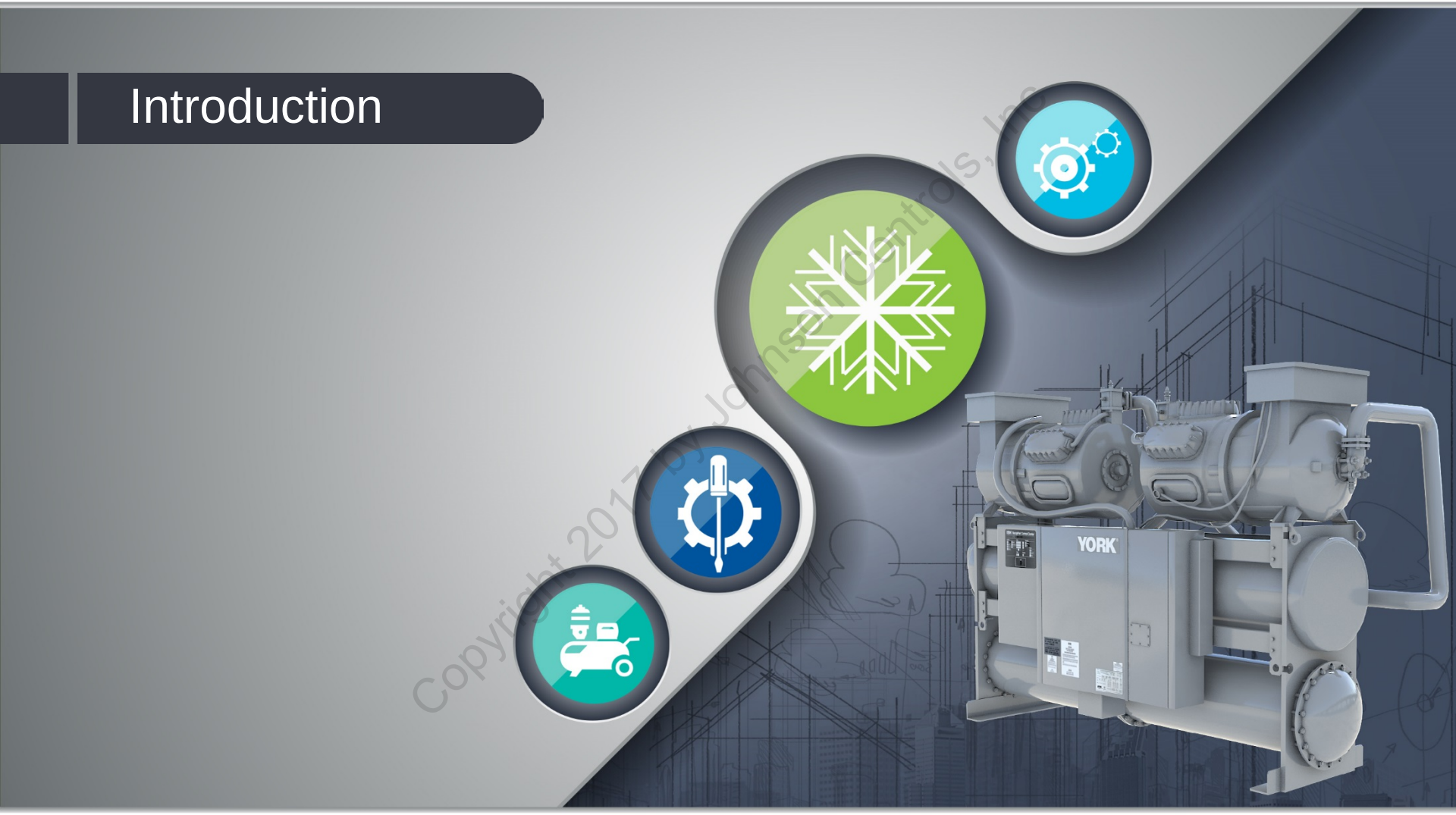

Copyright 2017 by Johnson Controls, Inc.

Introduction



Introduce yourself by sharing:

- Name, location, and years with the company
- Types of chiller systems worked on
- Any experience working on M Compressors
- Your expectations



Copyright 2017 by Johnson Controls, Inc

Housekeeping Issues



Copyright 2017 by Johnson Controls, Inc

Course Topics

Day 1

- M Compressor Basics
- Stall and Surge Basics
- M Compressor Components

Day 2

- Lubrication System
- Operation and Controls

Day 3

- Operation and Controls
- Site Preparation
- Assembly

Day 4

- Assembly
- Alignment

Day 5

- Alignment
- Commissioning
- Service Guidelines

Copyright 2017 by Johnson Controls, Inc

M Compressor Titan Chiller



M Compressor Titan Chiller (Cont'd.)



Any Questions?



Copyright 2017 by Johnson Controls, Inc

Stall and Surge Basics

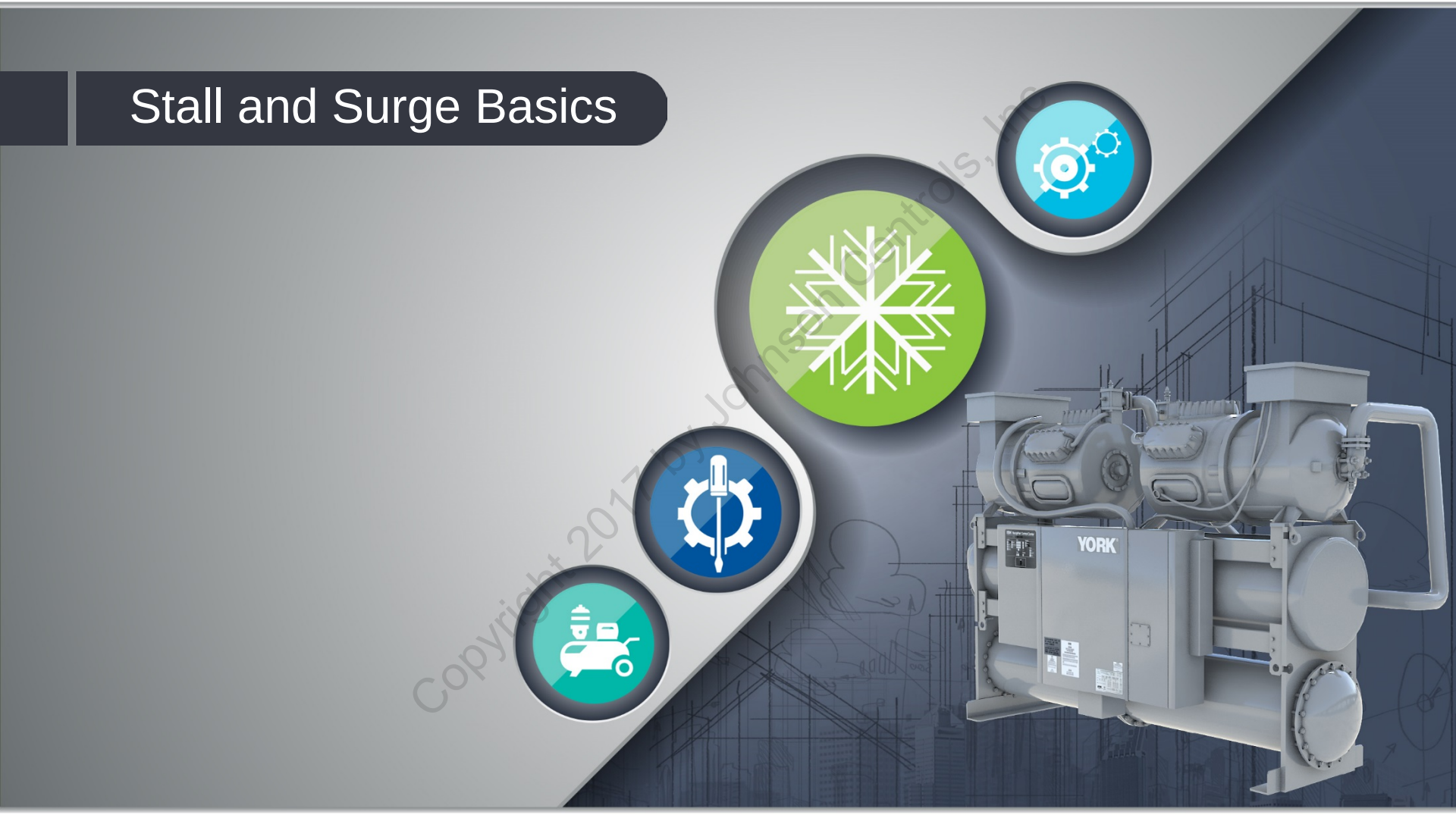

Copyright 2017 by Johnson Controls, Inc.

Lesson Objectives

M Compressor Basics

1. Introduction
2. Components
3. Lubrication System
4. Operation and Controls

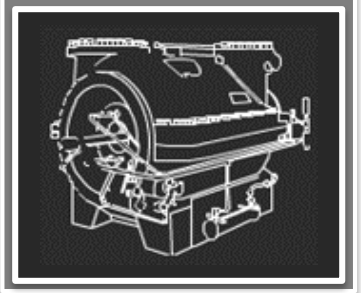

At the end of this lesson, you will be able to:

- Explain the affinity laws for centrifugal compressors
- Identify the causes and remedies of stall and surge in centrifugal compressors
- Describe the gas flow through the various parts of the M Compressor
- Describe each component of the M Compressor
- Explain the lubrication system/oil flow of the M Compressor
- Explain the purpose of the various M Compressor controls

Copyright 2017 by Johnson Controls, Inc

Topic Objectives

M Compressor Basics

1. Introduction
2. Components
3. Lubrication System
4. Operation and Controls

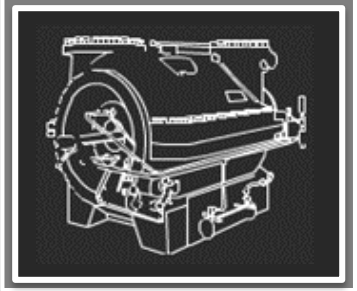

At the end of this topic, you will be able to describe the:

- Theory of operation of a centrifugal chiller
- Causes and remedies of stall and surge
- Compressor performance maps

Copyright 2017 by Johnson Controls, Inc

Multistage Compressor

- The lowest pressure is in front of the first impeller
- Pressure increases as the vapor passes from the first impeller to the last
- There are two to eight stages of compression

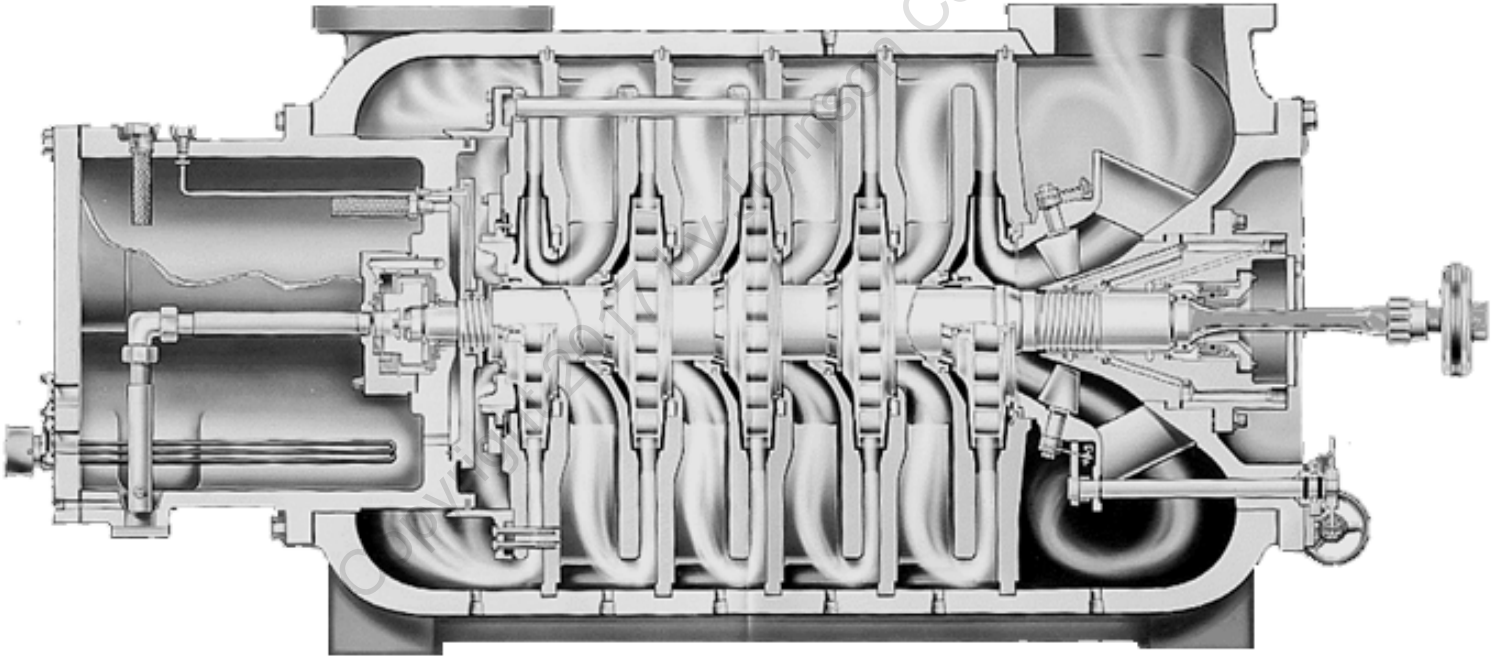

Copyright 2017 Johnson Controls, Inc

Review and Recap: Centrifugal Compressor

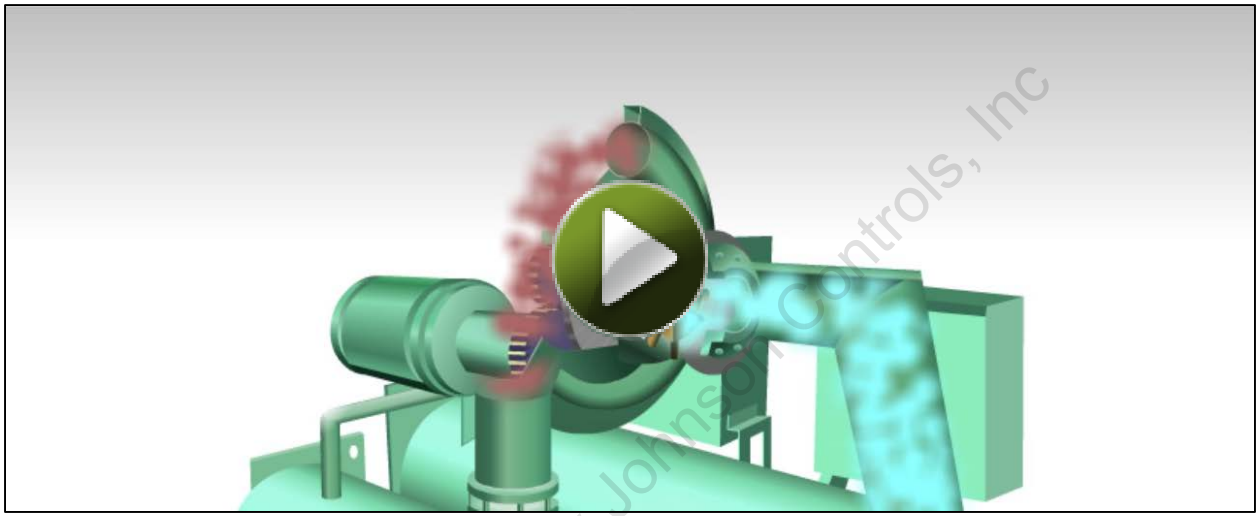

- Volumetric device (Pumping Volume over Time)
- Uses a spinning impeller to increase the pressure of the refrigerant vapor
- Uses the rotational speed to compress the vapor
- Uses a combination of rotational speed and wheel diameter to accelerate the vapor
- Kinetic energy gets converted to pressure energy

Copyright 2014 by Johnson Controls, Inc

Velocity and Pressure – Refrigerant Flow

(Details on slide #8)

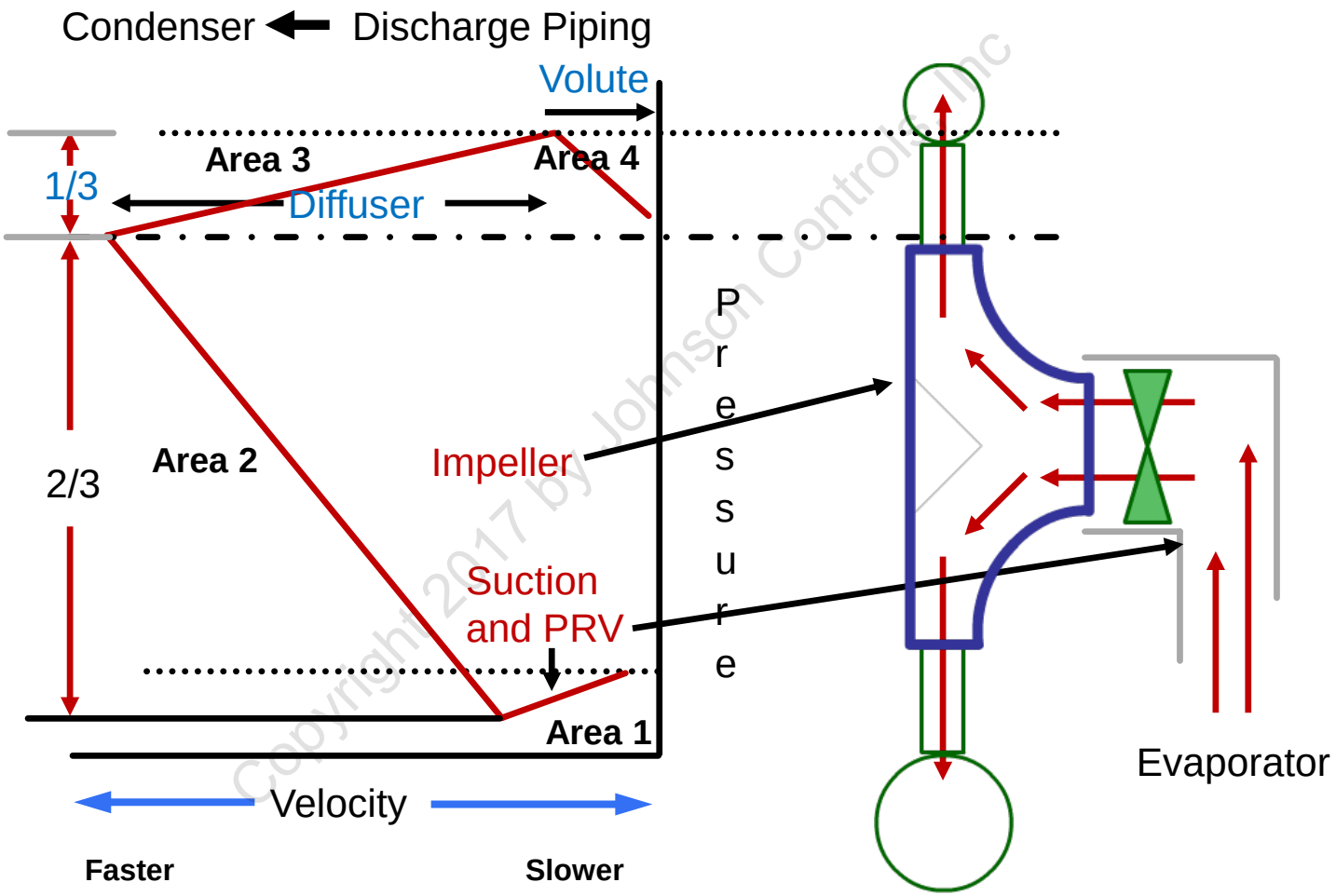

Copyright 2017 by Johnson Controls Inc

Velocity and Pressure Changes

- As the impeller rotates, it draws the refrigerant molecules in from the eye of the impeller towards the outside edge by centrifugal force
- As the gas vapor moves into the impeller, it leaves behind an area of very low pressure
- This pressure difference causes the refrigerant to circulate

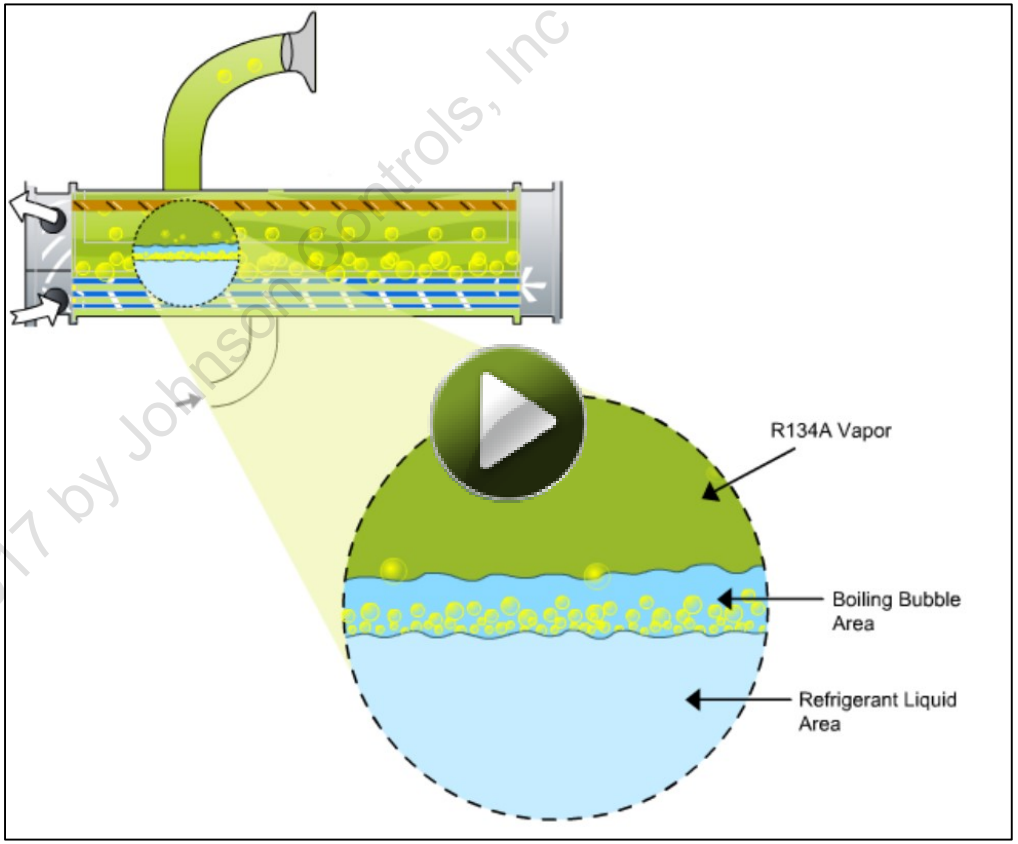

Copyright 2017 by Johnson Controls, Inc

Velocity and Pressure

		Pressure	Velocity
Area 1	**Evaporator**	Decreases	Increases
Area 2	**Evaporator**	Increases	Increases
Area 3	**Diffuser**	Increases	Decreases
Area 4	**Volute**	Decreases	Decreases

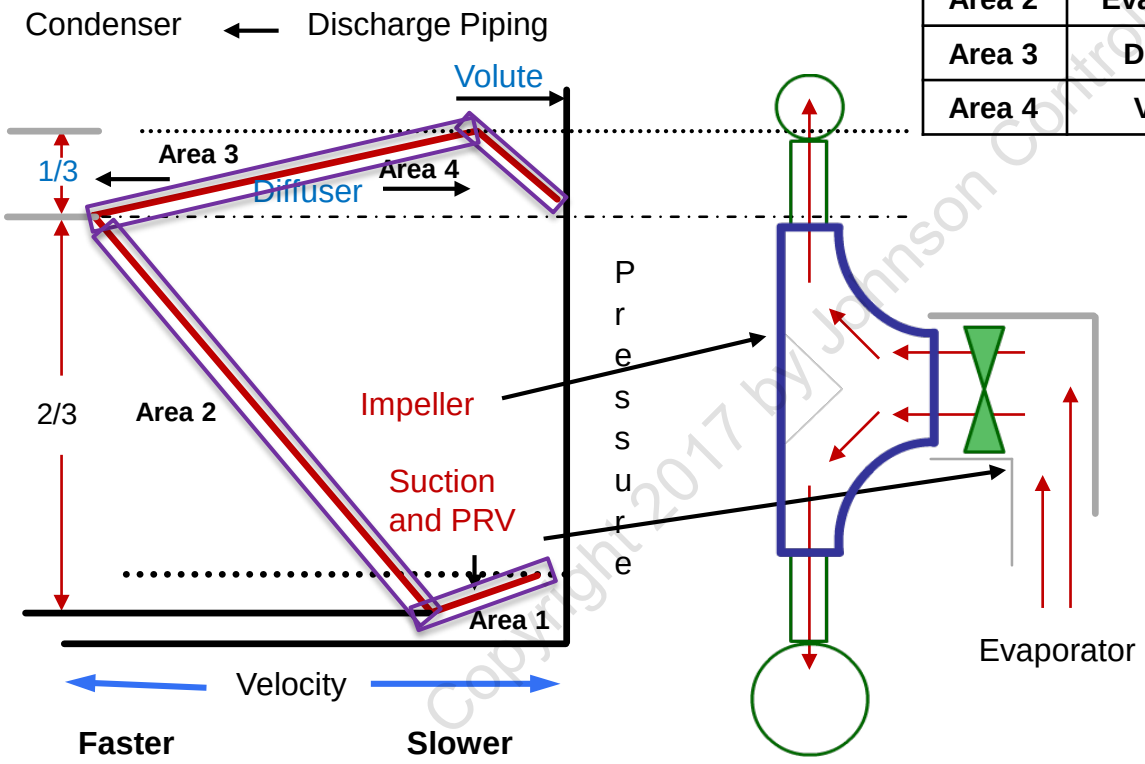

Copyright 2017 by Johnson Controls, Inc

Internal Impeller Space

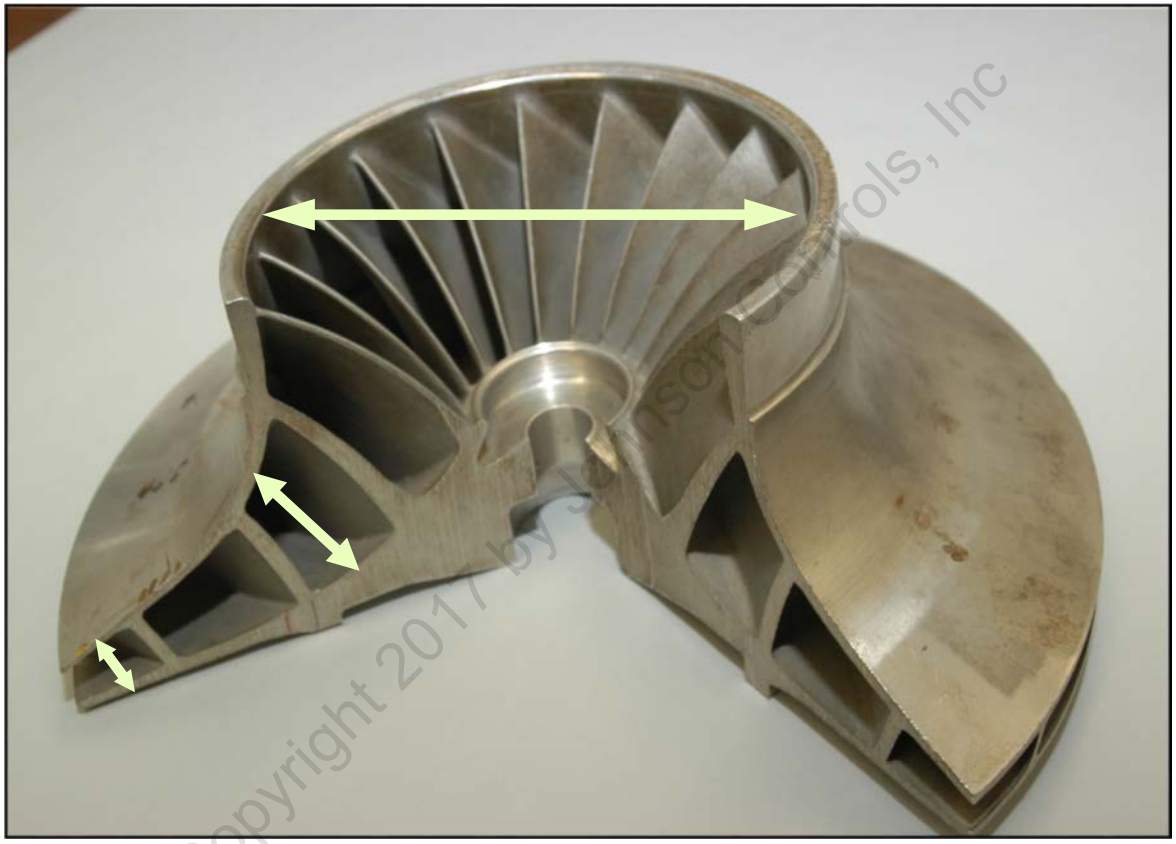

Copyright 2017 by Johnson Controls, Inc

When the refrigerant accelerates through the impeller, the cross-sectional area changes and the vapor is compressed

Affinity Laws—Constant Impeller Diameter

Flow is proportional to shaft speed or RPM.

Q1/Q2 = N1/N2

Pressure or head is proportional to the square of shaft speed or RPM.

H1/H2 = (N1/N2)^2

Power is proportional to the cube of shaft speed or RPM.

P1/P2 = (N1/N2)^3

Q is the volumetric flow rate.

N is the shaft rotational speed.

H is the pressure or head developed by the fan/pump.

P is the shaft power.

Wheel Diameter Constant, PRV Constant, Wheel Velocity Changing

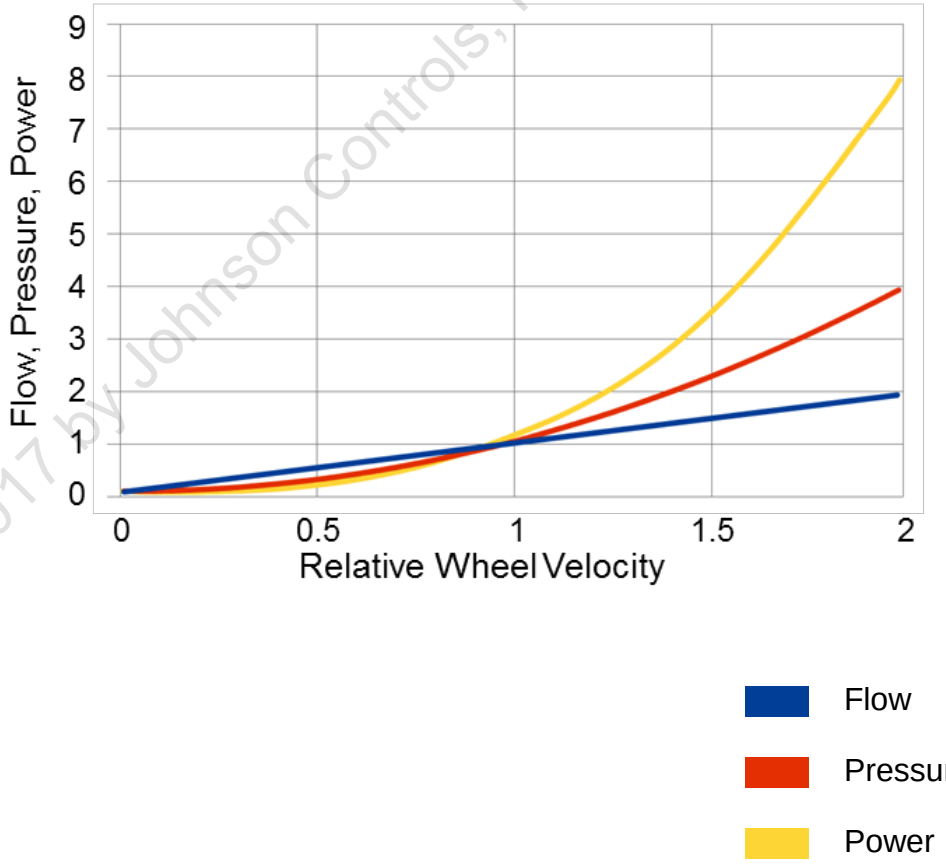

Copyright 2017 by Johnson Controls, Inc

Affinity Laws—Constant Shaft Speed

Flow is proportional to the cube of impeller diameter.

$Q1/Q2 = (D1/D2)^3$

Pressure or head is proportional to the square of impeller diameter.

$H1/H2 = (D1/D2)^2$

Power is proportional to the fifth power of impeller diameter.

$P1/P2 = (D1/D2)^5$

Q is the volumetric flow rate.

D is the impeller diameter.

H is the pressure or head developed by the fan/pump.

P is the shaft power.

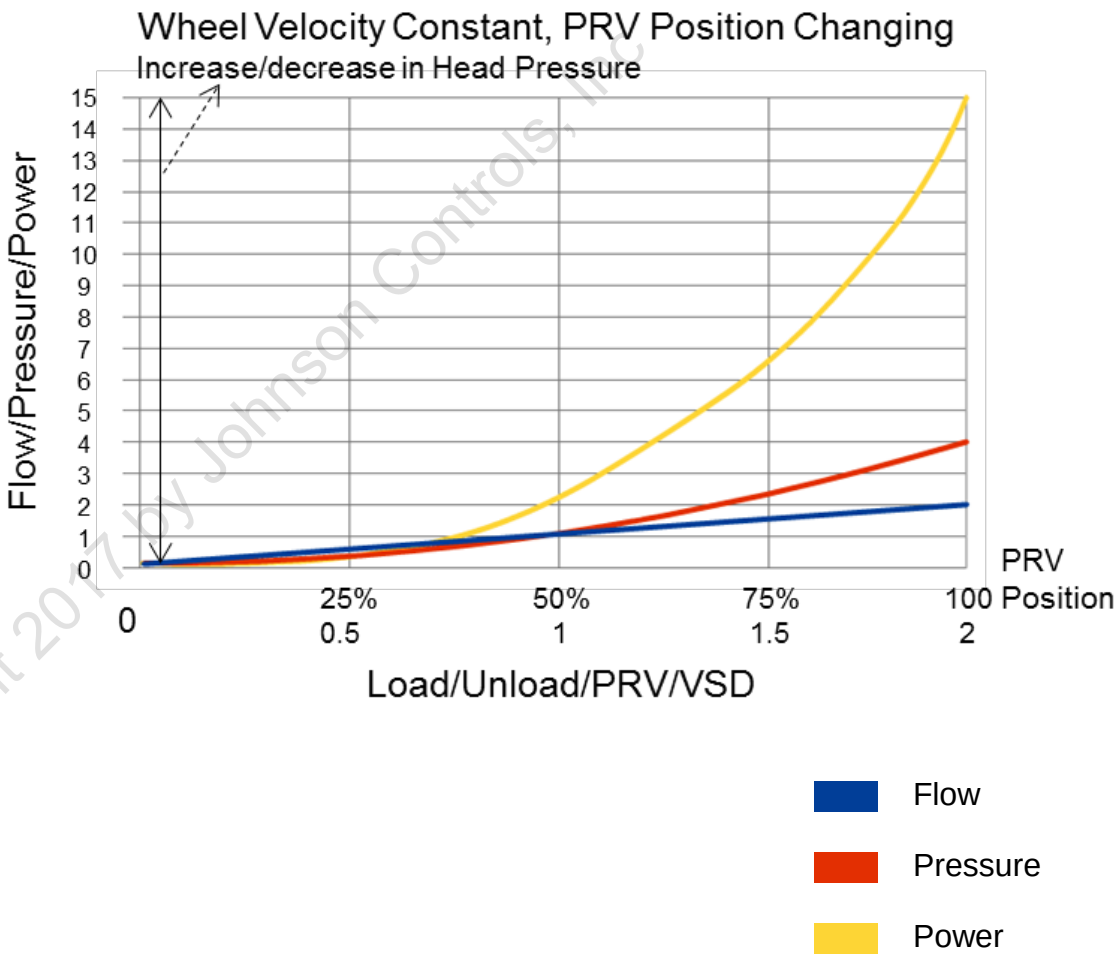

Copyright 2017 by Johnson Controls, Inc

How Does a Centrifugal Chiller Work?

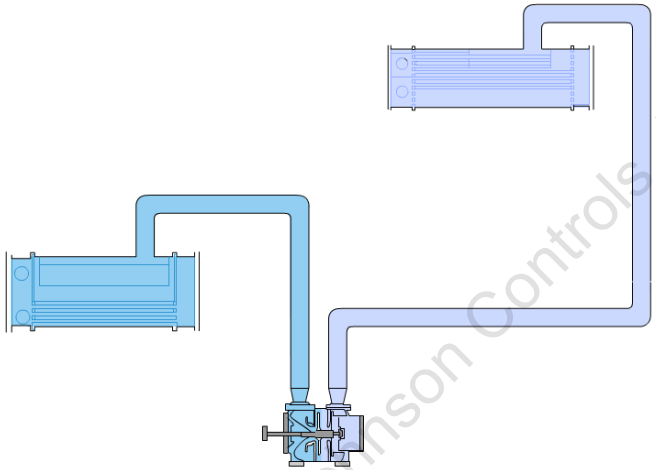

Copyright 2017 by Johnson Controls, Inc

1. Centrifugal Chiller Normal Operation
2. Centrifugal Chiller Operation—Increased Pressure Differential between the Evaporator and the Condenser
3. Centrifugal Chiller Operation—Pressure Buildup in the Condenser
4. Centrifugal Chiller Operation—Return to Normal Operation

Centrifugal Chiller Normal Operation

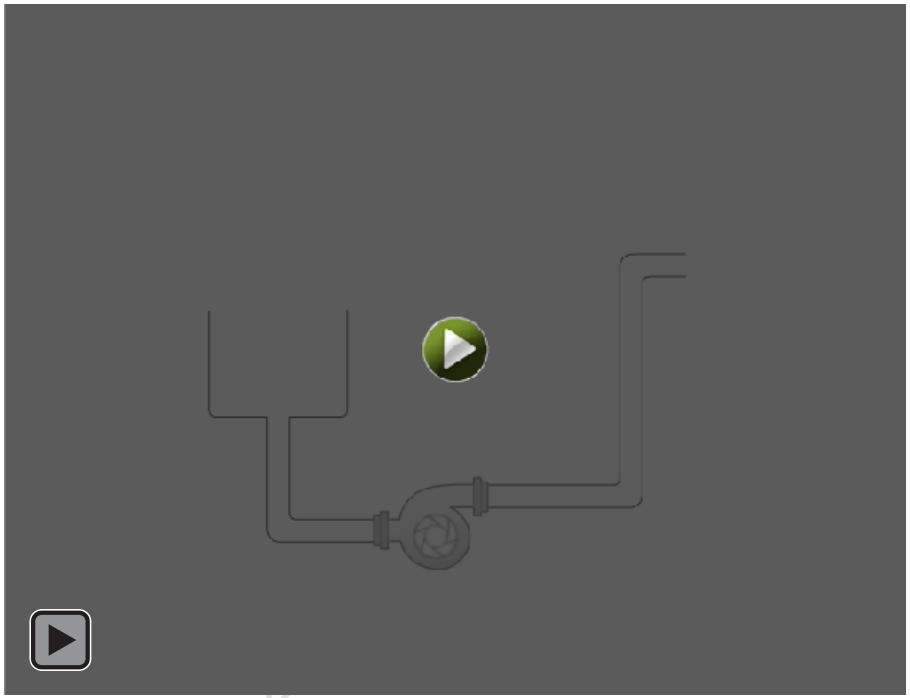

Under normal operation, the low pressure vapor moves from the evaporator to the compressor, where it gets compressed and transformed into a high pressure vapor.
The high pressure vapor is received by the condenser, where it gets converted from gas to liquid.

Copyright

Centrifugal Chiller Operation—Increased Pressure Differential between the Evaporator and the Condenser

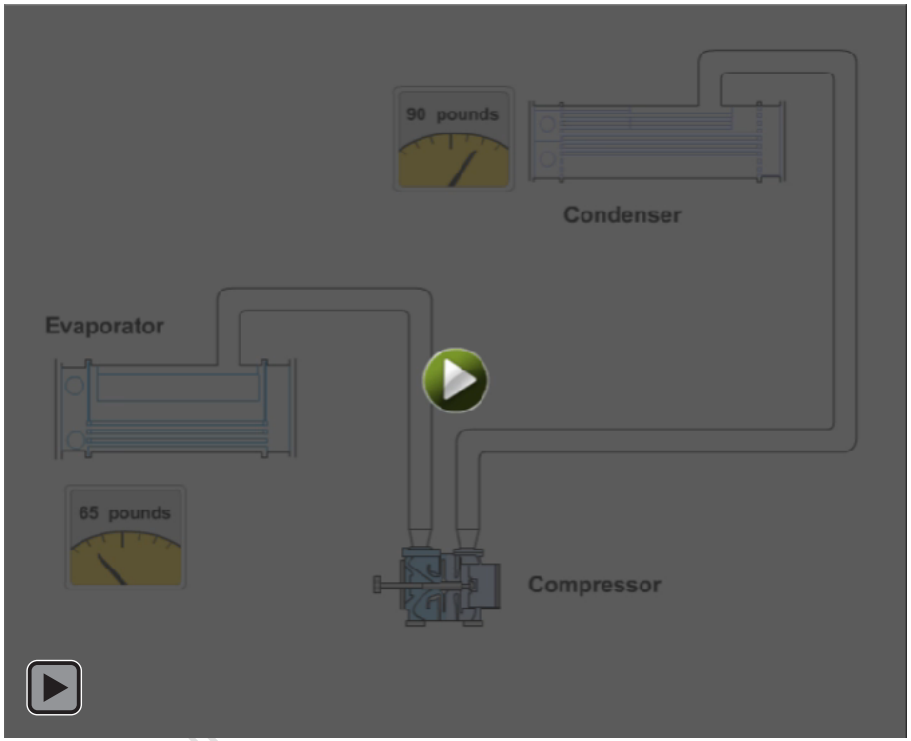

When the pressure difference between the evaporator and the condenser increases beyond capacity, the flow of the refrigerant vapor stops or stalls. This results in increased discharge temperature of the compressor due to the impeller friction with the gas.

Copyright

Centrifugal Chiller Operation—Pressure Increase in the Condenser

- The gas flows backwards until a null point is reached, when all gas flow ceases and compressor spins without pumping
- If the pressure continues to rise, surge occurs
- Motor unloads completely and then loads up very quickly
- Unique noise
- Can repeat every few minutes/seconds
- Should be addressed immediately

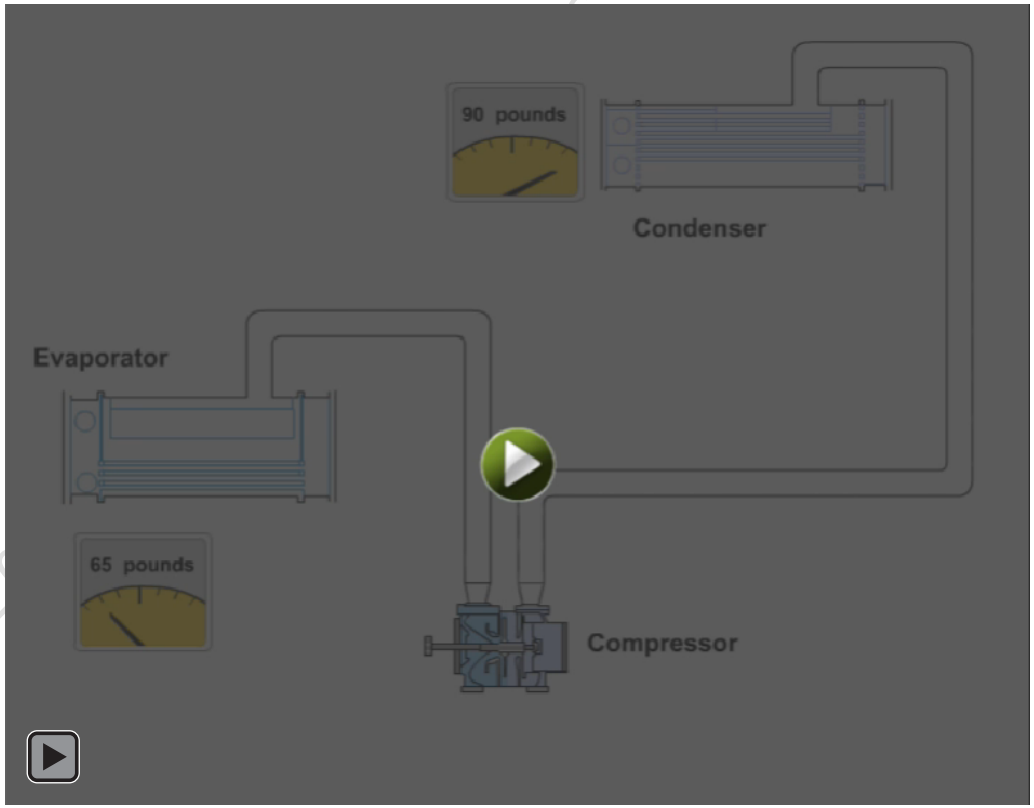

Copyright 2

Centrifugal Chiller Operation—Return to Normal Operation

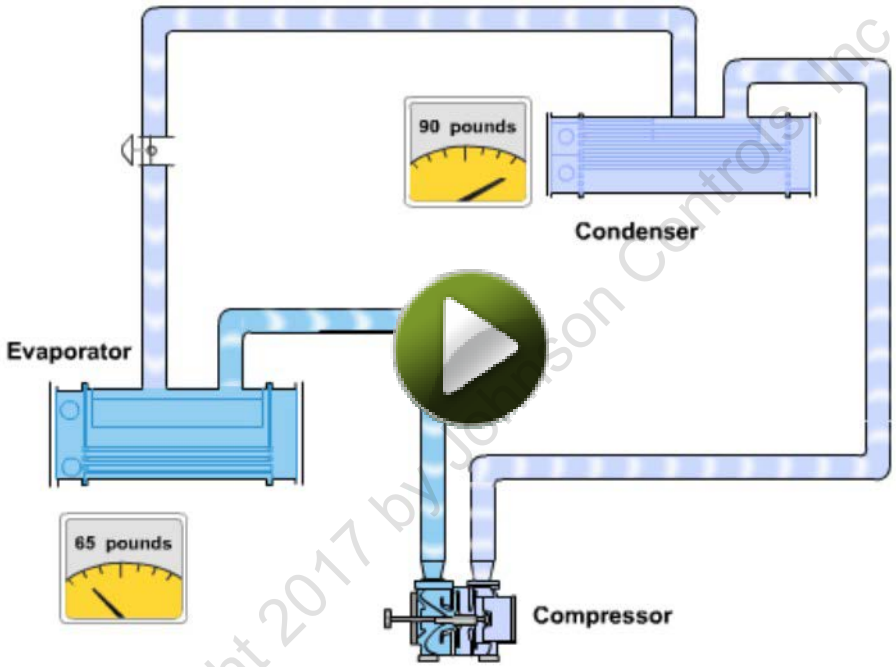

Copyright 2017 by Johnson Controls, Inc

When the condenser pressure rises until it will cause a surge, the control panel opens the hot gas valve to either relieve the condenser pressure or add gas to the evaporator to stop its pressure from dropping.

Check Your Understanding—1

During normal operation, which is the area of lowest pressure in the compressor?

- ☐ Diffuser
- ☐ Impeller
- ☑ Front of the impeller
- ☐ Volute space

Copyright 2017 by Johnson Controls, Inc



Check Your Understanding—2

Based on the velocity and pressure relationship in a centrifugal compressor, how much of pressure rise happens in the diffuser under normal operation of the compressor?

- [x] 1/3
- [ ] 2/3
- [ ] 1/2
- [ ] 1/4

Copyright 2017 by Johnson Controls, Inc.



Stall

- Refrigerant vapor does not transition smoothly into the condenser
- Occurs at reduced flow, or lower load, and/or increased head
- Response to light load stall equals operation of hot gas bypass valve (no VGD)
- Evaporator and condenser pressure and motor load are steady, but not normal
- Normally, there will be a small increased motor amps draw due to the resistance to the gas flow
- Precursor to surge
- Not recommended to run the compressor in this state

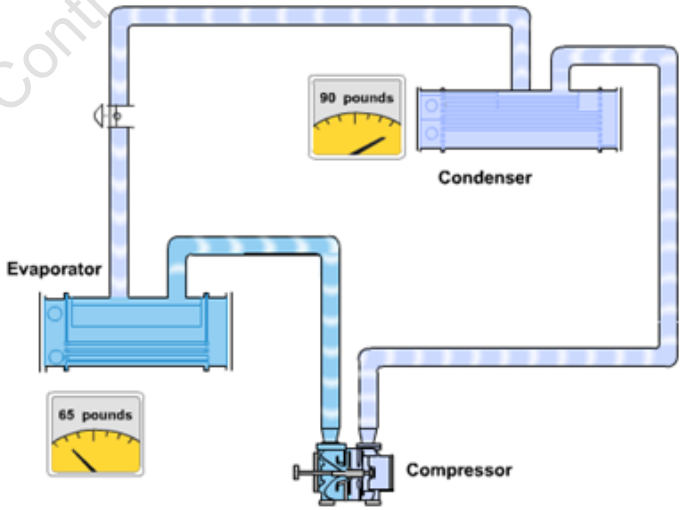

Copyright 2017 by Johnson Controls, Inc

Gas Flow

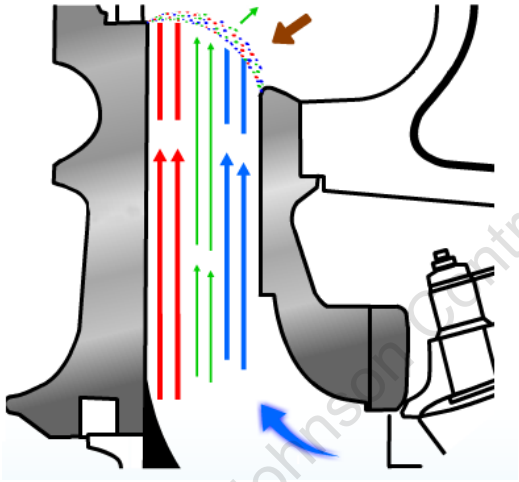

1. Normal Gas Flow
2. Gas Flow in Case of Increased Condenser Pressure
3. Gas Flow in Case of Reduced Mass Flow
4. Gas Flow in Stall
5. Gas Flow in Surge

Copyright 2017 by Johnson Controls, Inc

Normal Gas Flow

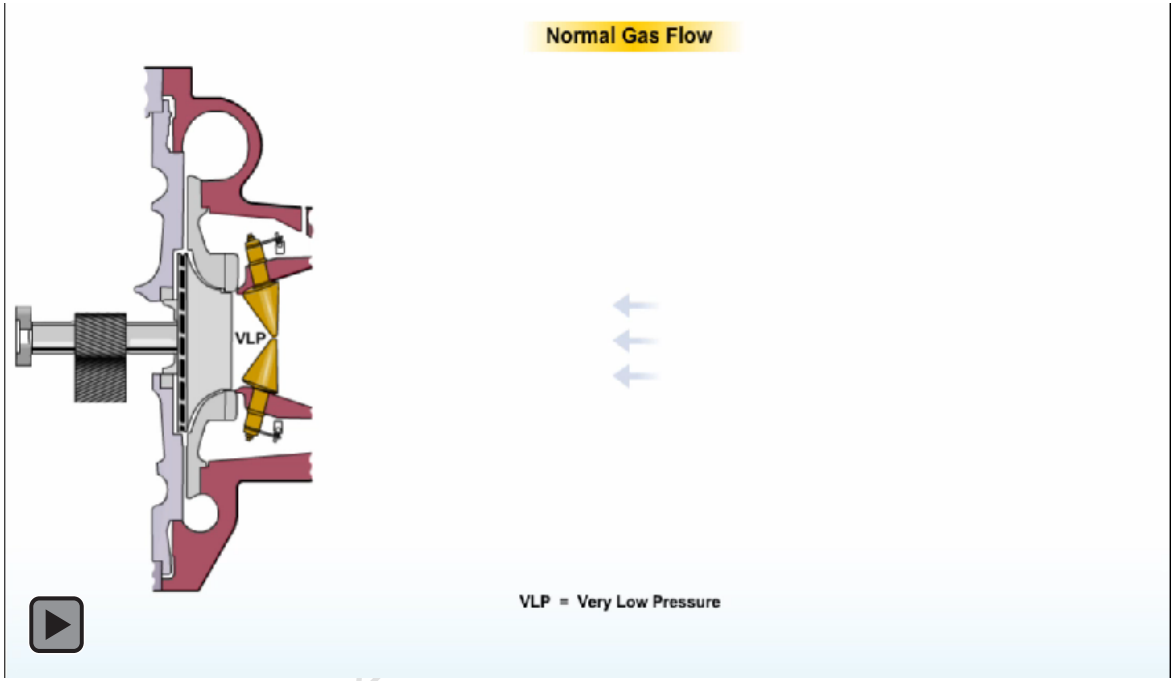

In case of a normal condenser pressure and steady mass flow, the low pressure refrigerant vapor gets pulled into the eye of the impeller. The spinning action of the impeller increases the velocity of the vapor. The vapor at the tip of the impeller enters the diffuser, from where it goes into the volute space and gets discharged into the condenser.

Copyright

Gas Flow in Case of Increased Condenser Pressure

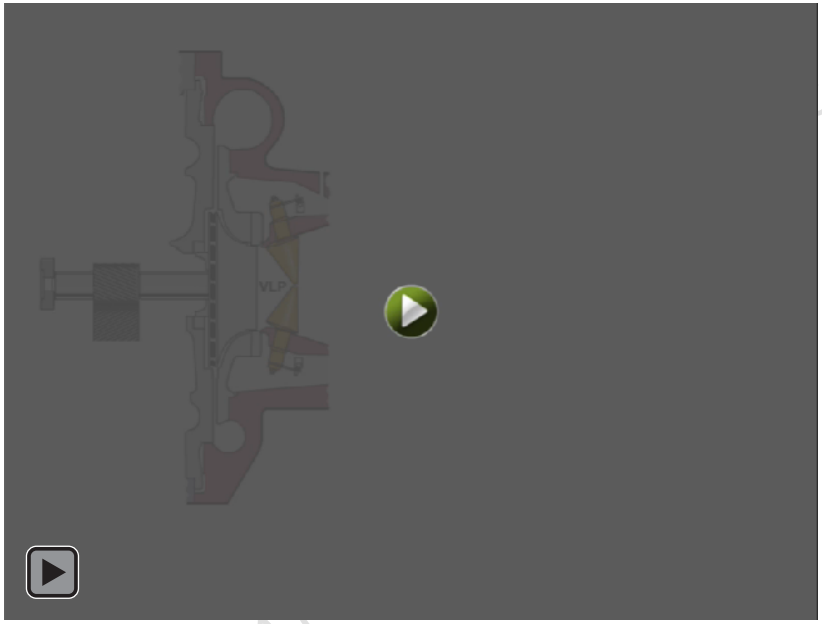

Let's now see what happens when there is an increase in the condenser pressure.

The flow of vapor through the diffuser slows down. This results in a flattened plume at the tip of the diffuser. Some of the vapor from the center does go through to the volute space, but the vapor on the sides does not. Instead, stall pockets form on the sides.

Copyright 201

Gas Flow in Case of Reduced Mass Flow

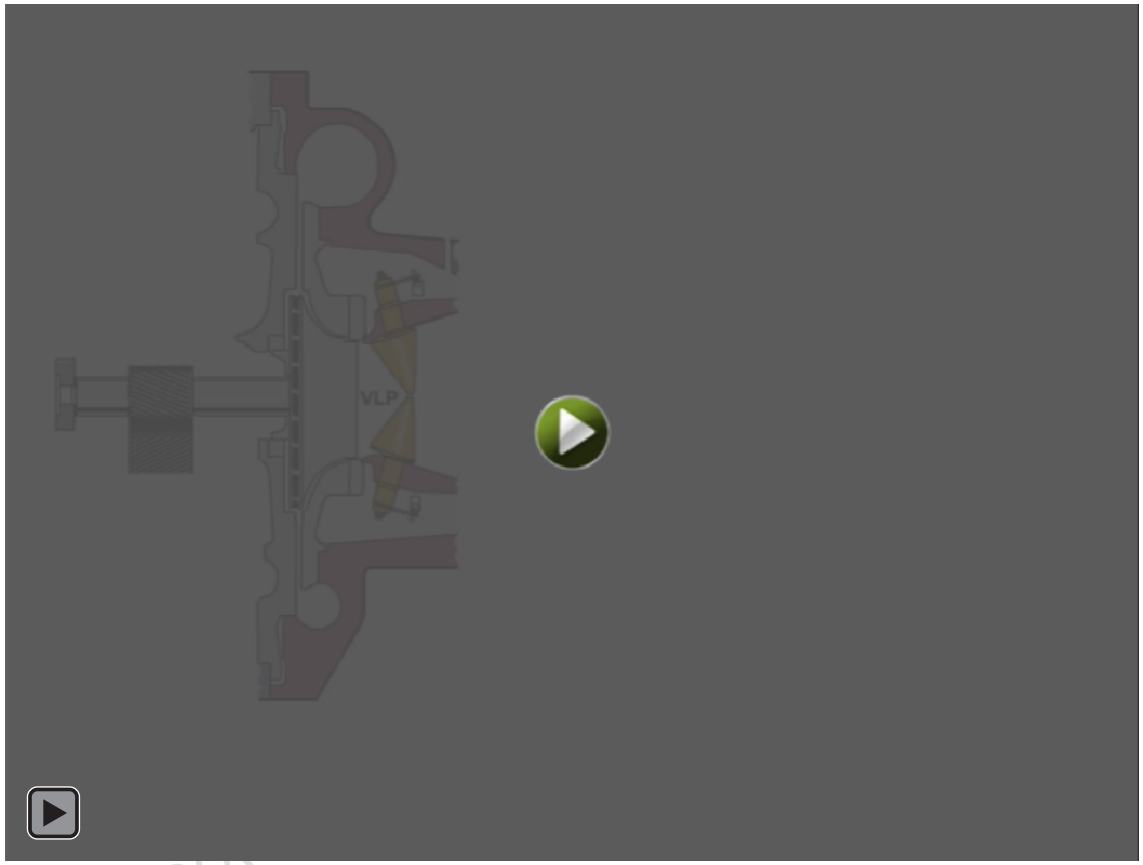

The same thing happens when the flow of gas is reduced. The plume flattens and rotating stall pockets form.

Gas Flow in Stall

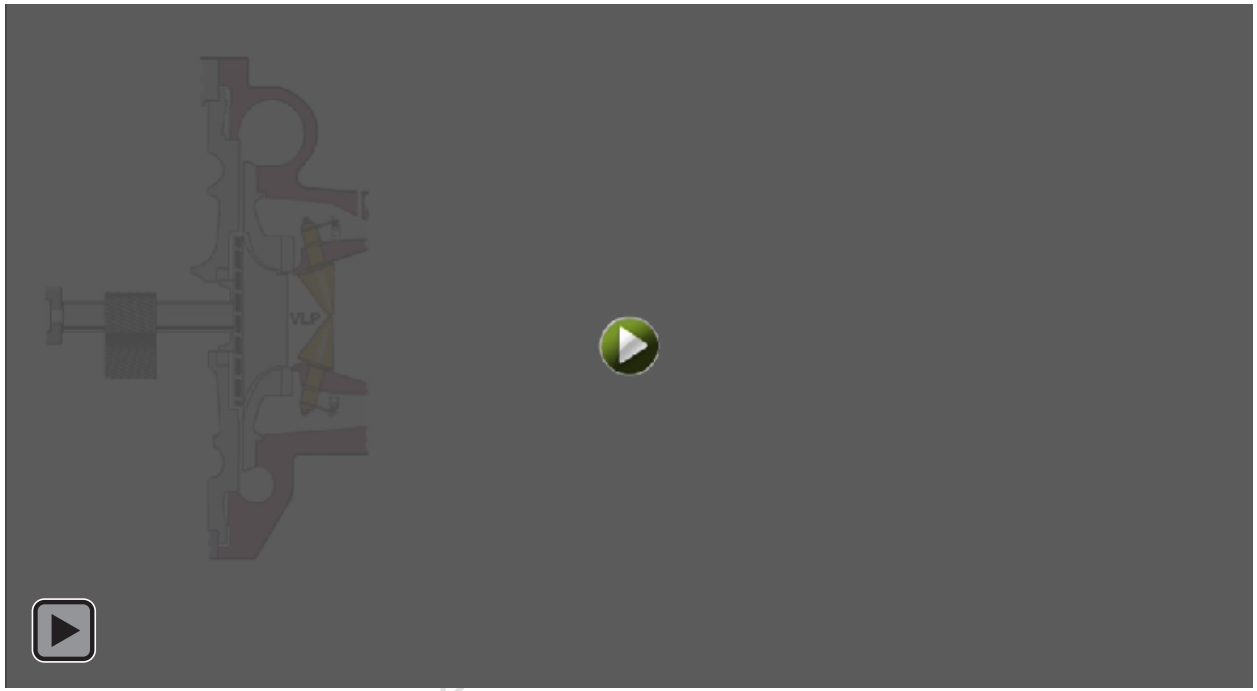

Let's see how this looks from the outside view. After the gas comes out from the tip of the impeller, it keeps on rotating around the diffuser space walls, causing the well-known "rumbling sound" associated with low load conditions. Only a small amount of vapor passes through to the volute space, and this is at a higher discharge temperature.

Copyright

Gas Flow in Surge



If the condenser pressure, volume flow, or rotational speed keeps falling further, a point is reached when the compressor impeller can no longer support the gas flow and the flow is reversed. The gas now flows towards the eye of the impeller in a direct line.
At this point, the compressor is said to have entered a surge condition.

Copyright 2

Normal Gas Flow

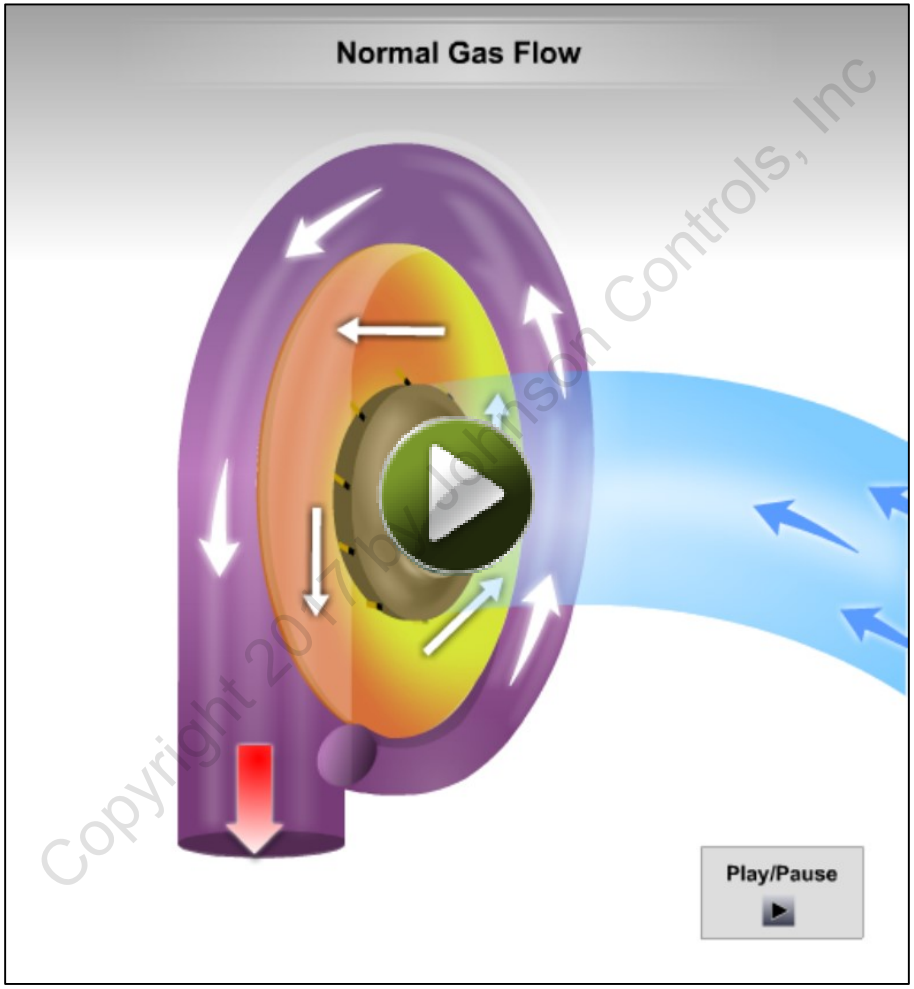

Copyright 2017 by Johnson Controls, Inc

Stall Gas Flow and Sound



Copyright 2017 by Johnson Controls, Inc

Surge Gas Flow and Sound

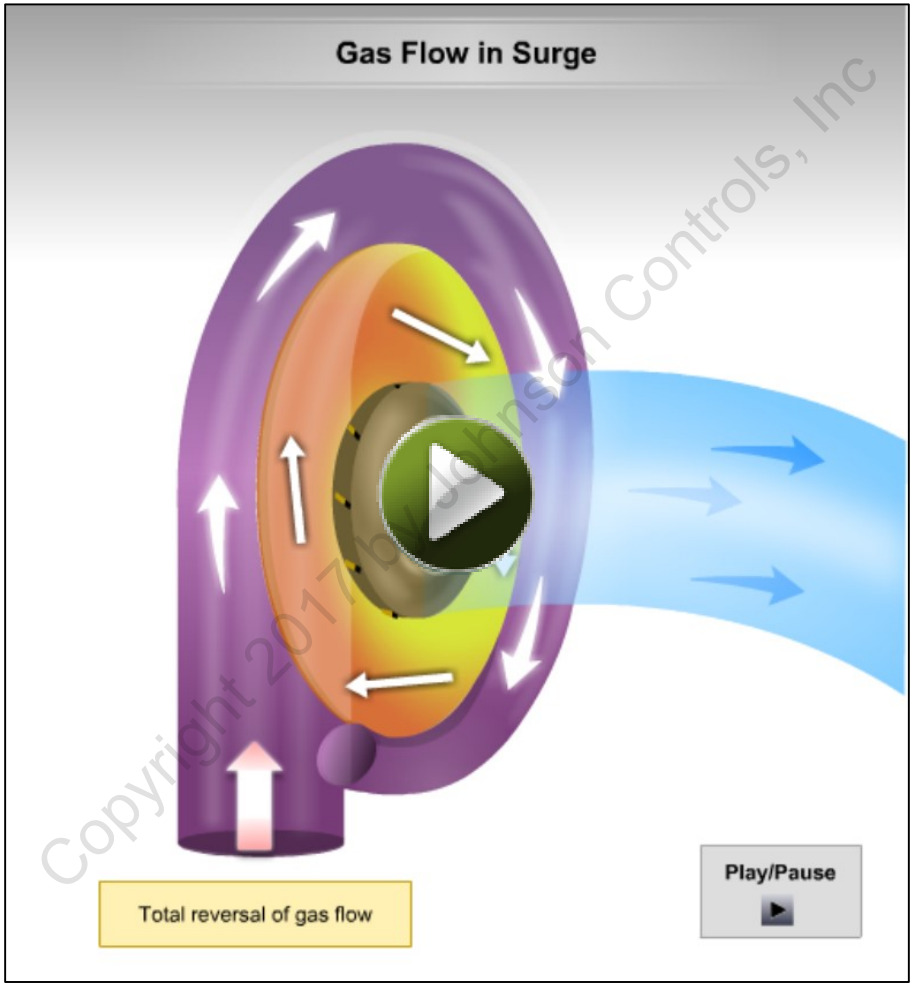

Copyright 2017 by Johnson Controls, Inc

Compressor Maps

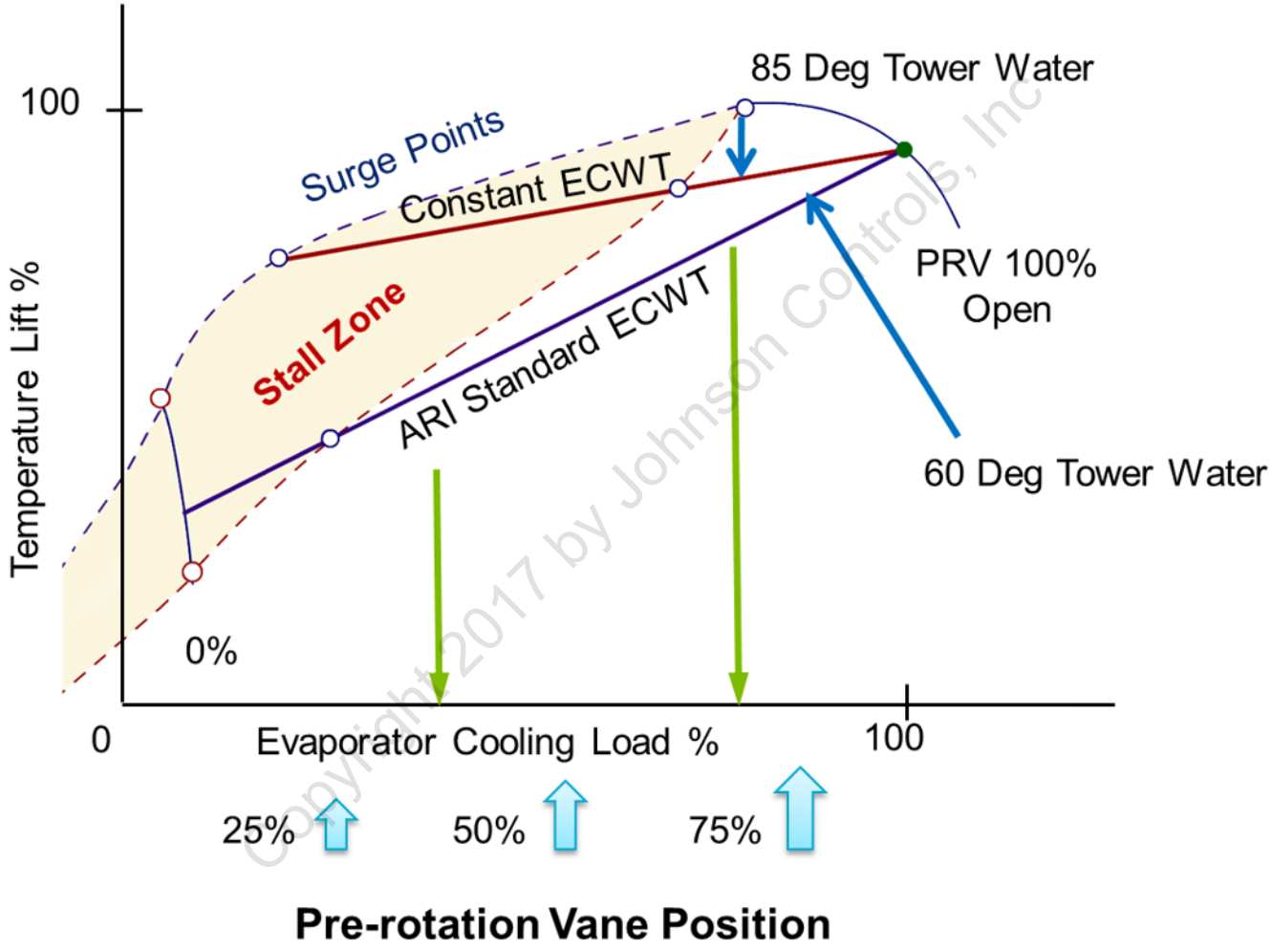

Copyright 2017 by Johnson Controls, Inc.

Compressor Maps (Cont'd.)

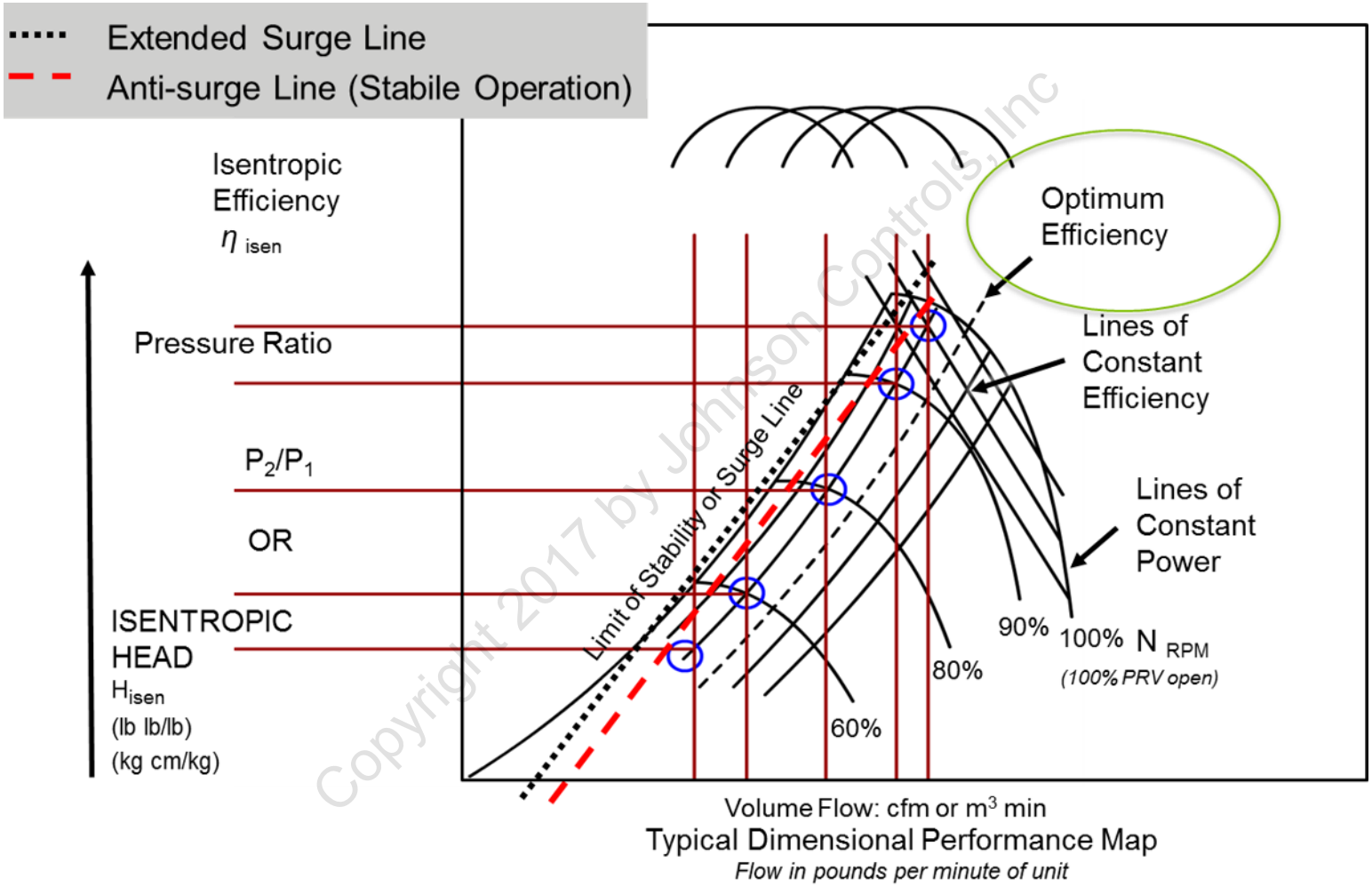

Compressor Performance – (Ref Operation and Service Manual)

Program control to stay to right of red line

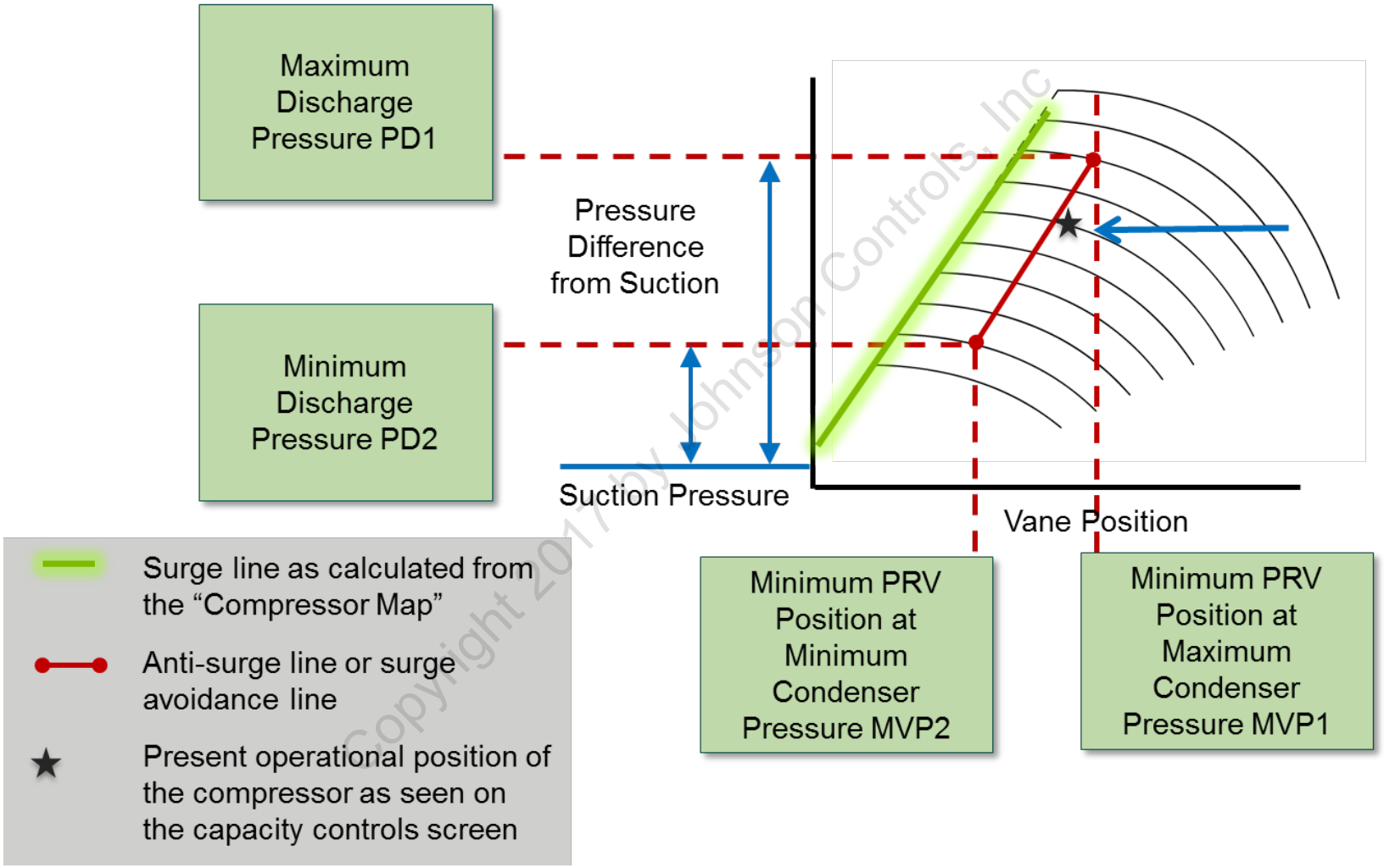

Copyright 2017 by Johnson Controls, Inc

Check Your Understanding—3

State if the given statement is true or false.

The flow of the refrigerant gas flowing through the diffuser plates is laminar, with the slowest gas molecules on the sides and the fastest molecules in the middle.

- (•) True
- ( ) False

Reset

Copyright 2017 by Johnson Controls, Inc



Check Your Understanding—4

Which statements apply to the stall and surge phenomena?

- ☐ Surge happens when the compressor can no longer support the gas flow and the flow is reversed.
- ☐ During surge, the refrigerant vapor keeps rotating around the diffuser space walls, causing the well-known “rumbling sound.”
- ☐ Surge is a precursor to stall.
- ☑ A compressor stalls when the refrigerant gas coming off the compressor does not smoothly transition into the condenser.

Copyright 2017 by Johnson Controls, Inc



Stall and Surge—Effects on Compressor Operation

Operation in stall causes resonant vibration that leads to:

- Broken Piping
- Broken Oil Coolers
- Internal Tube Leaks

Operation in surge causes:

- Broken Thrust Bearing
- Broken Impeller Eye
- Broken Machine

Copyright 2017 by Johnson Controls, Inc.

Stall and Surge Effects

Broken Thrust Bearing

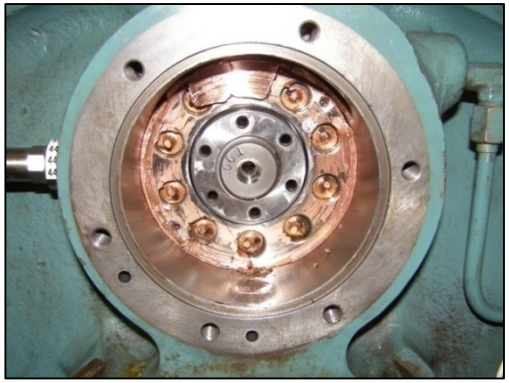

Broken Impeller Eye

Before



After



Copyright 2017 by Johnson Controls, Inc

Discussion: Causes of Stall and Surge

Given below is a list of potential causes of increase in condenser pressure and reduced mass flow (i.e. stall and surge). Identify which of these can cause the compressor to surge and stall. Then, list the remedies for the causes identified.

1. Dirty evaporator tubes
2. Dirty or blocked condenser tubes
3. Dirty pump strainers
4. Low water flow in the condenser
5. Low water flow in the evaporator
6. Trapped non-condensable gases in the chiller
7. Wrong refrigerant gas or mixed gases
8. High condenser water temperature
9. Low refrigerant charge
10. Variable orifice not working correctly
11. Low condensing water temperature (stacking)
12. Condenser pass baffle leakage



Copyright 2017 by Johnson Controls Inc

Discussion: Causes of Stall and Surge (Cont'd.)

Answer

Given below is a list of potential causes of increase in condenser pressure and reduced mass flow (i.e. stall and surge). Identify which of these can cause the compressor to surge and stall. Then, list the remedies for the causes identified.

1. Dirty evaporator tubes: Clean tubes
2. Dirty or blocked condenser tubes: Clean tubes
3. Dirty pump strainers: Clean strainers and check Delta P
4. Low water flow in the condenser: Check why the flow is low
5. Low water flow in the evaporator: Check why the flow is low
6. Trapped non-condensable gases in the chiller: High approach on the condenser
7. Wrong refrigerant gas or mixed gases: Check the stopped chiller pressure
8. High condenser water temperature: Check why the temperature is high
9. Low refrigerant charge: Check for leaks or the evaporator level, evaporator approach
10. Variable orifice not working correctly: Check operation
11. Low condensing water temperature (stacking): Rising level in the condenser
12. Condenser pass baffle leakage: Delta Pressure across the condenser after checking the pump flow

Copyright 2007 Johnson Controls, Inc.

Remedies of Stall and Surge

- Allow the head (entering tower water temperature) to fall with the load
- Open the hot gas bypass sooner by changing the capacity control points
- Run one chiller fully loaded, instead of two lightly loaded
- Keep the tubes clean

Copyright 2017 by Johnson Controls, Inc

Any Questions?



Copyright 2017 by Johnson Controls, Inc

Key Takeaways

In this topic, you learned that:

- M Compressor is a centrifugal and a volumetric device
- The affinity laws describe how the compressor performance changes with changing variables or conditions
- Stall is an aerodynamic disturbance that occurs in all centrifugal compressors at reduced flow (and/or increased head)
- Surging occurs when the pressure differential between the evaporator and the condenser becomes larger than the compressor can lift or ‘push’ against
- Compressor maps are used by the engineering department to calculate and program the chiller to keep out of surge; also known as “Anti-surge” control

Copyright 2017 by Johnson Controls, Inc

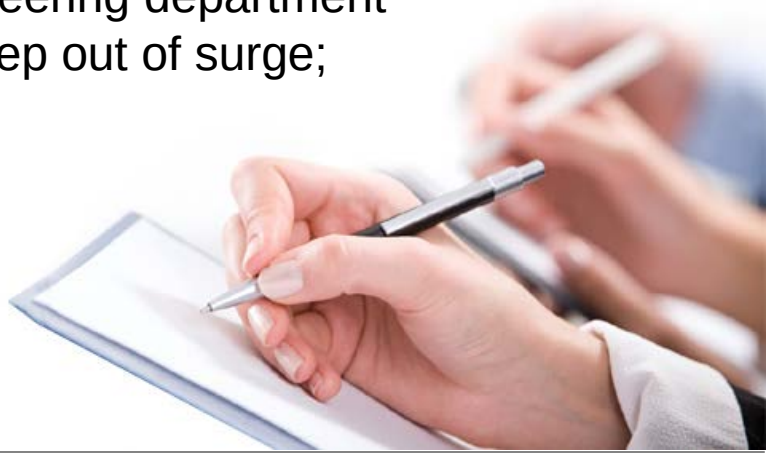

M Compressor_Components

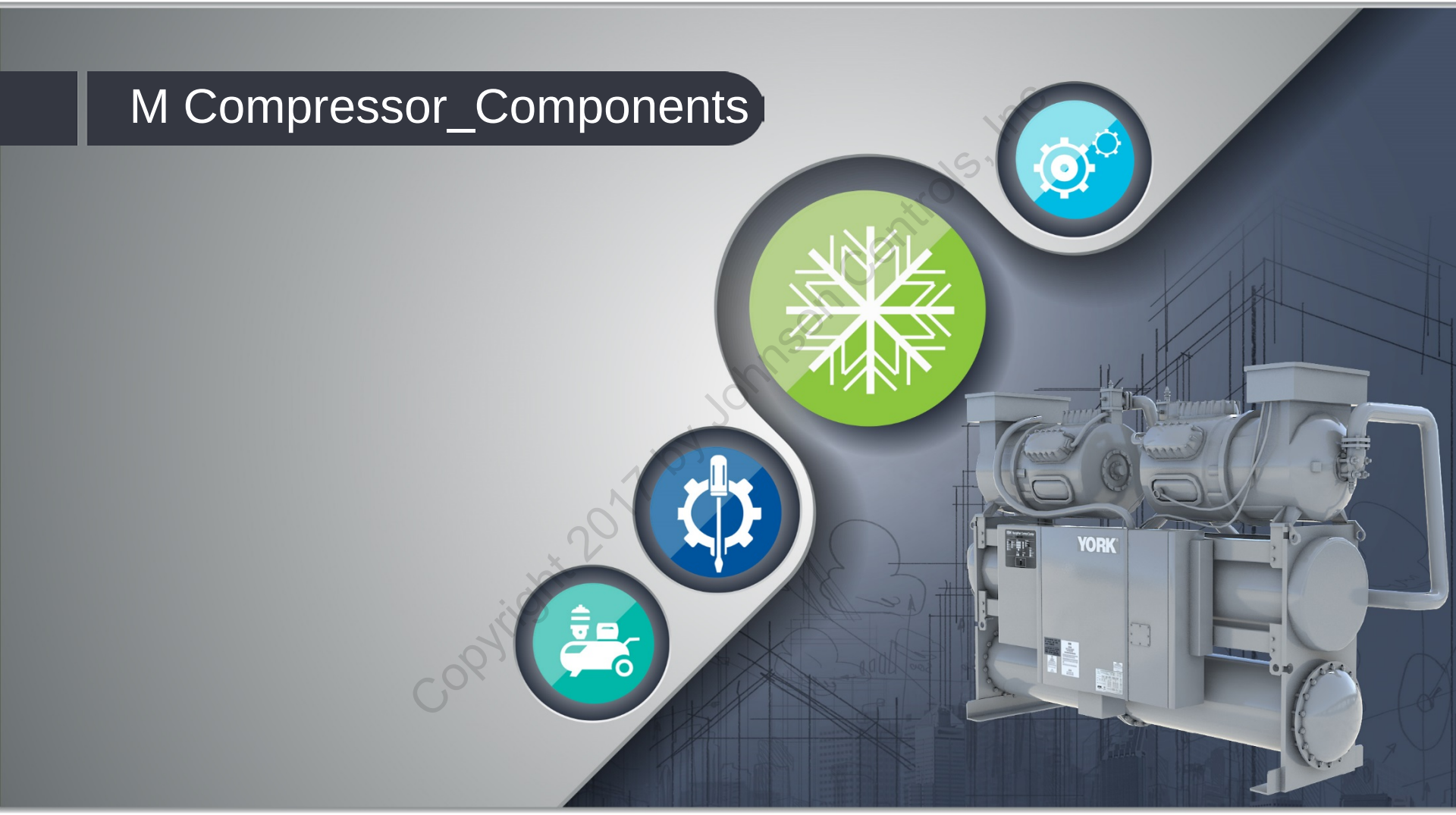

Copyright 2017 by Johnson Controls, Inc.

Topic Objectives

M Compressor Basics

1. Introduction
2. Components
3. Lubrication System
4. Operation and Controls

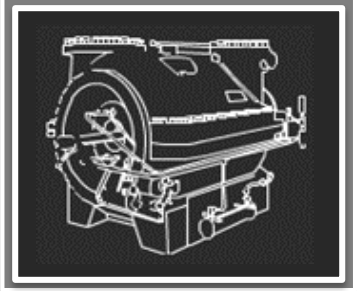

In this topic, you will discuss and learn about:

- Gas flow in the M Compressor
- Function of the various M Compressor components

Copyright 2017 by Johnson Controls, Inc

M Compressor—Introduction



- Designed and marketed in 1955
- Designed to compress various refrigerants, hydrocarbons, CO_2, air and chemical vapors
- Used in Open Multi-stage (OM) chillers from 2300 to 8500 tons
- Directly (turbine, motor, engine) or indirectly (gear box) driven
- Used in various fields (refineries, comfort cooling)

Copyright 2017 by Johnson Controls Inc

Design (Industrial)

- Capacity
- Head
- Side Load

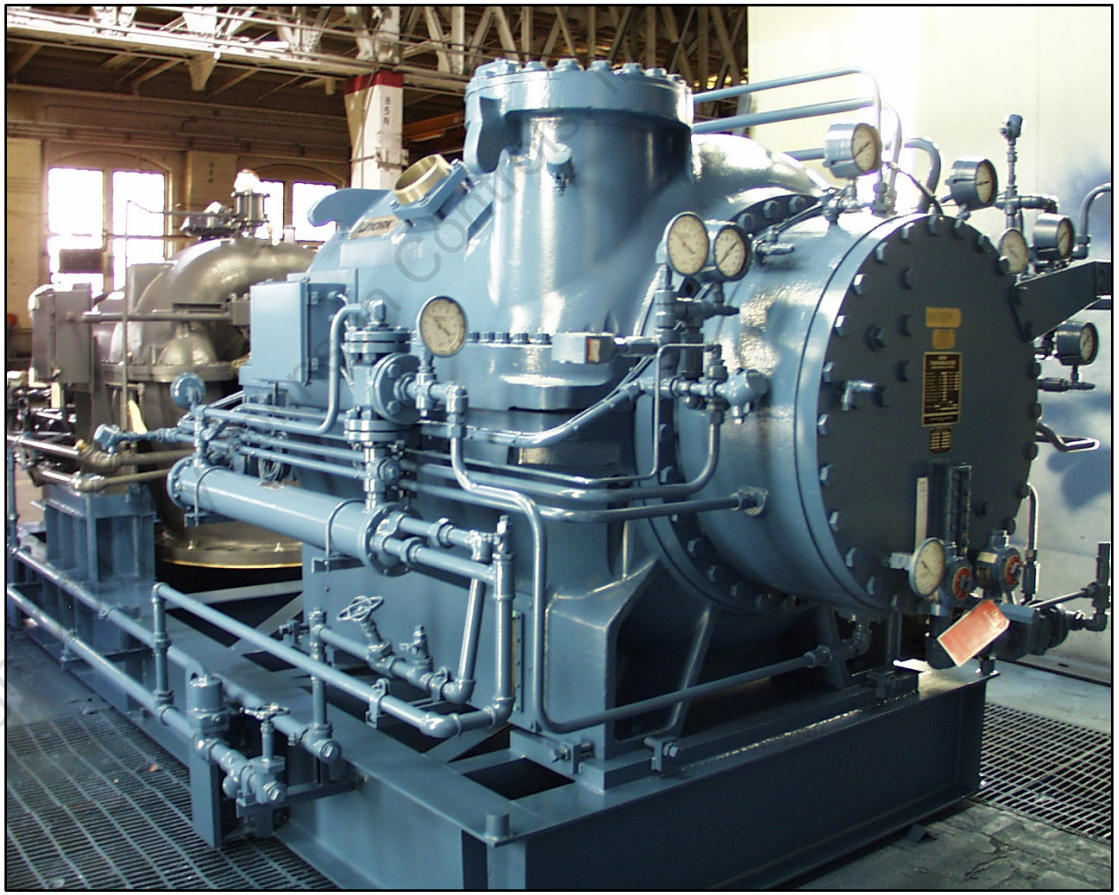

Copyright © York International Corporation

Design—Capacity



Capacity – Available in four casing diameters

Head

Side Load





Copyright 2017 by Johnson Controls, Inc.

Casings Sizes ID		25”	26”	38”	55”
Wheel Diameters (Inches)	B	8.25	12.2	18.0	26.7
	A	10.0	14.8	21.9	31.5

Design—Head

Capacity

Head – 2 to 8 stages of compression

Side Load

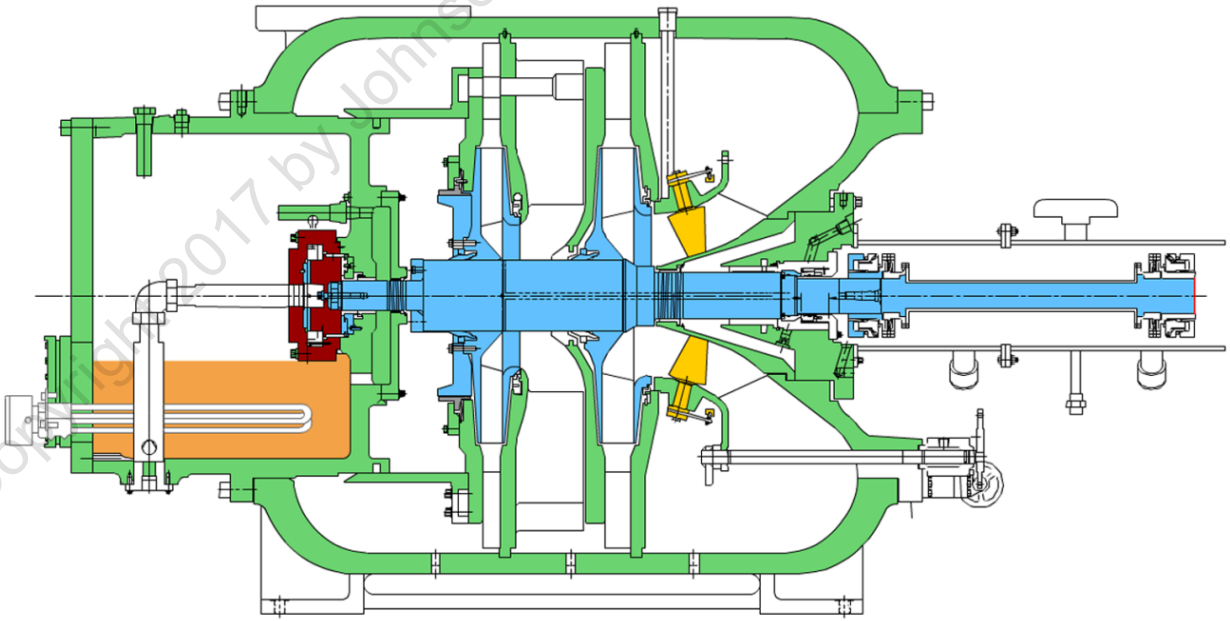

Copyright 2017 by Johnson Controls, Inc

Design—Side Load

Capacity

Head

Side Load – Up to 3-side load connections can be available

Side Load Connection

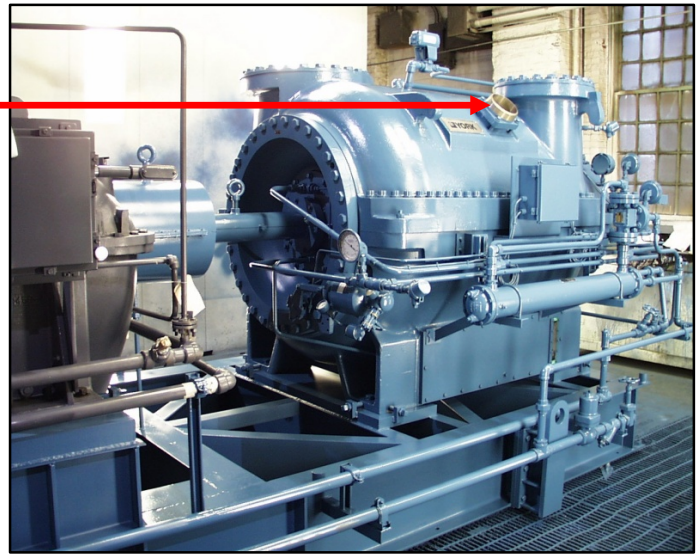

Copyright 2017 by Johnson Controls, Inc

Side Load Connection

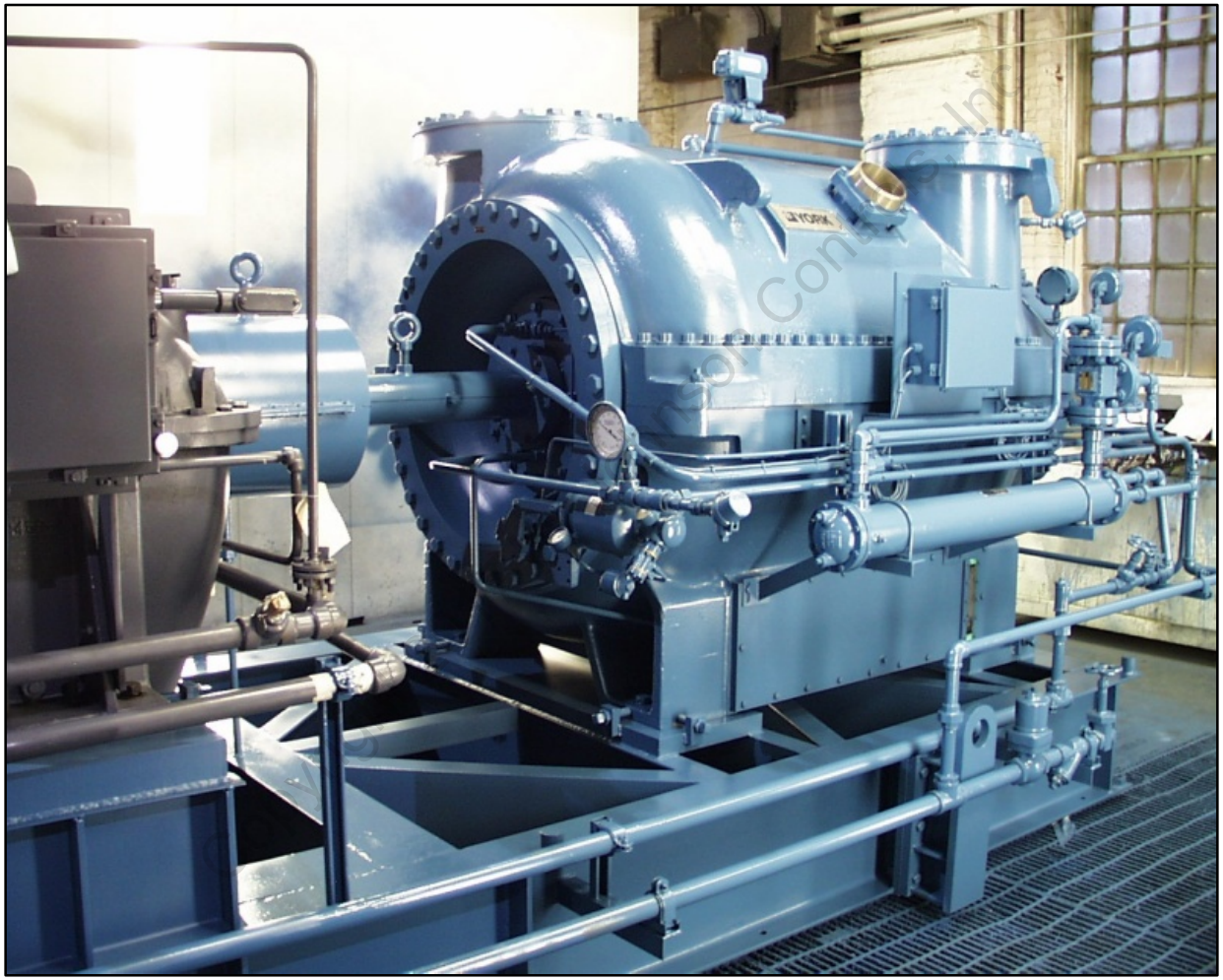

Our Policy prohibits printing. Save GREEN.

Construction Material



Casing Material

Cast Iron, Nodular Iron, or Cast Steel



Impeller

Aluminum or Stainless Steel



Internal Seals

Aluminum, Bronze, or Coated Cast Iron

Copyright 2017 by Johnson Controls, Inc

Nomenclature

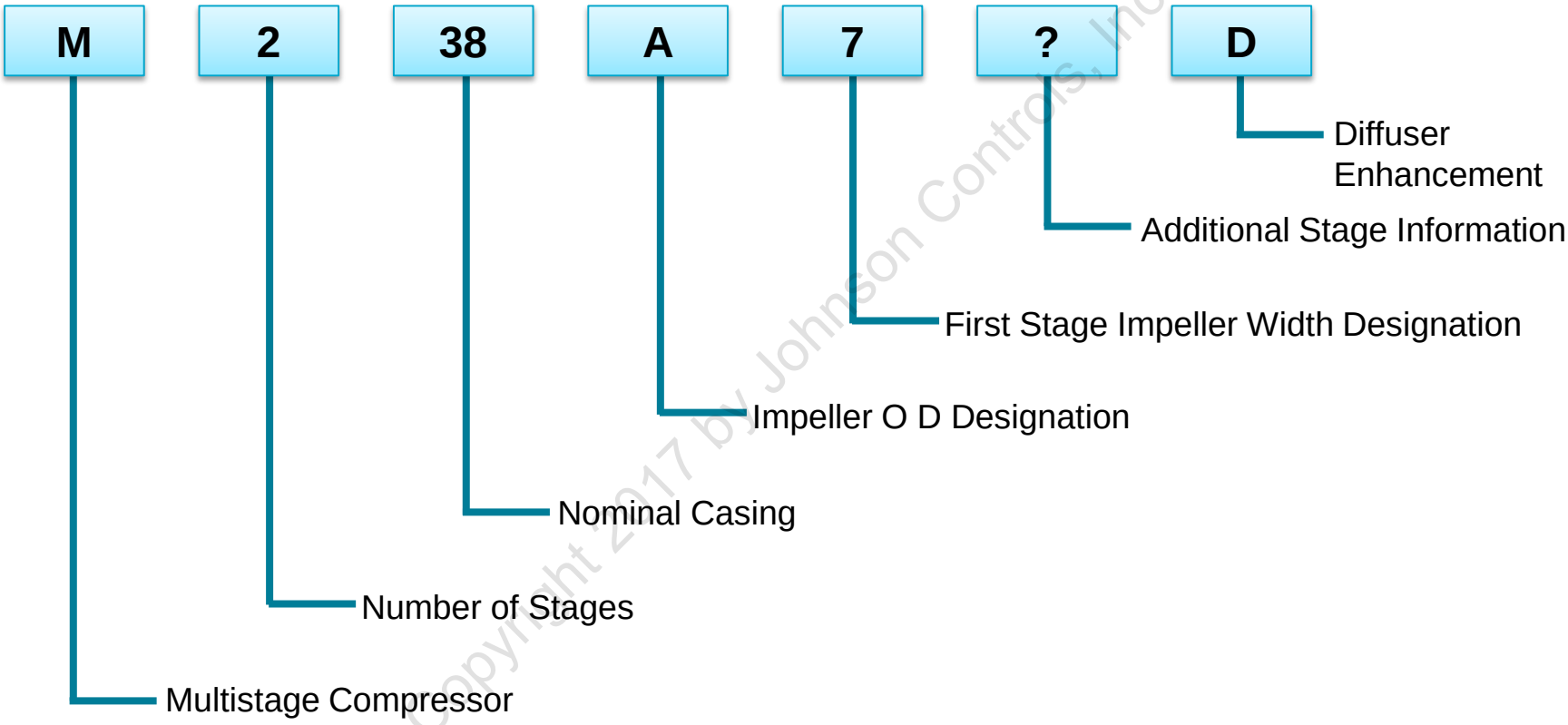

Copyright 2017 by Johnson Controls, Inc

M Compressor—External Views

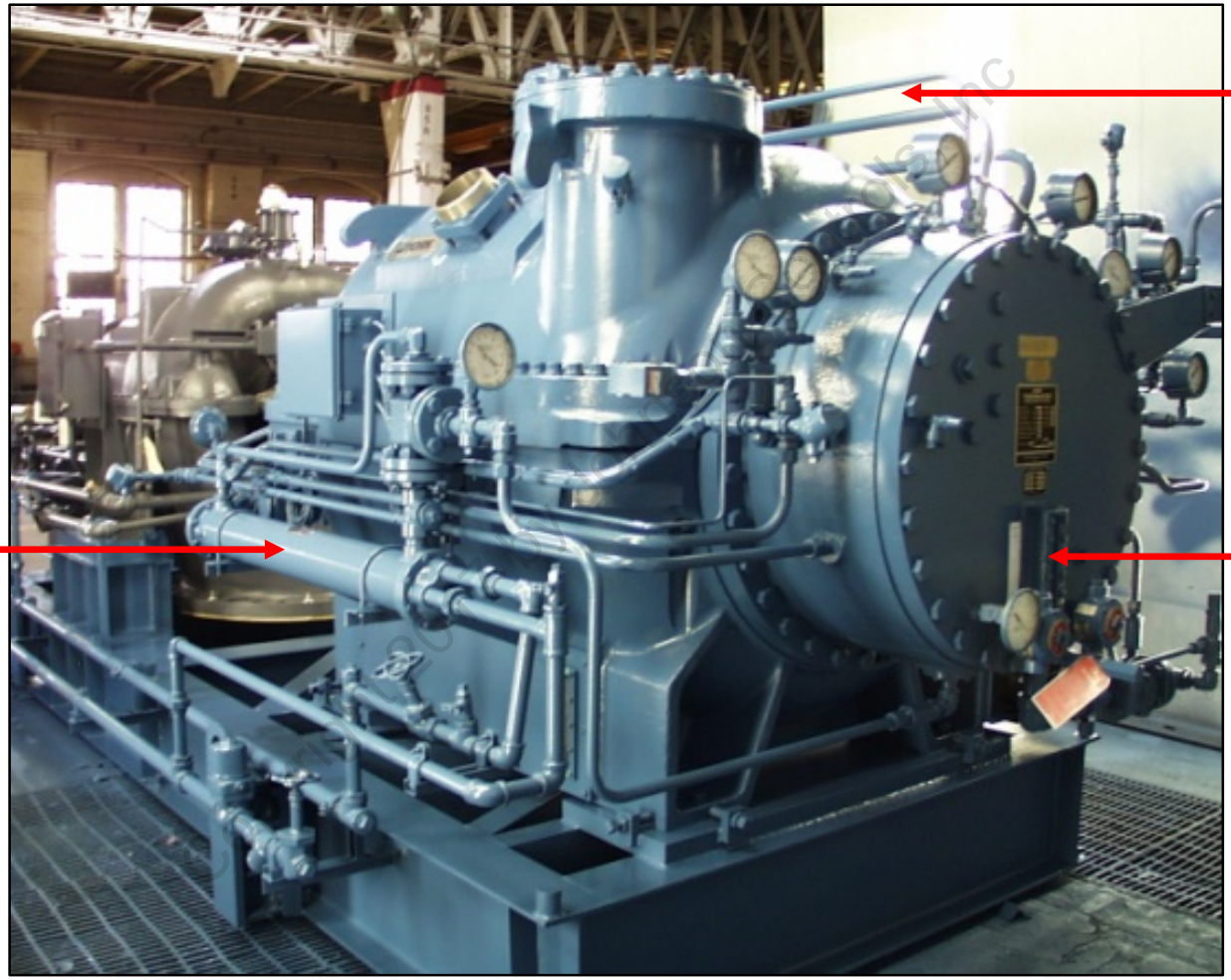

M Compressor—External Views (Cont'd.)

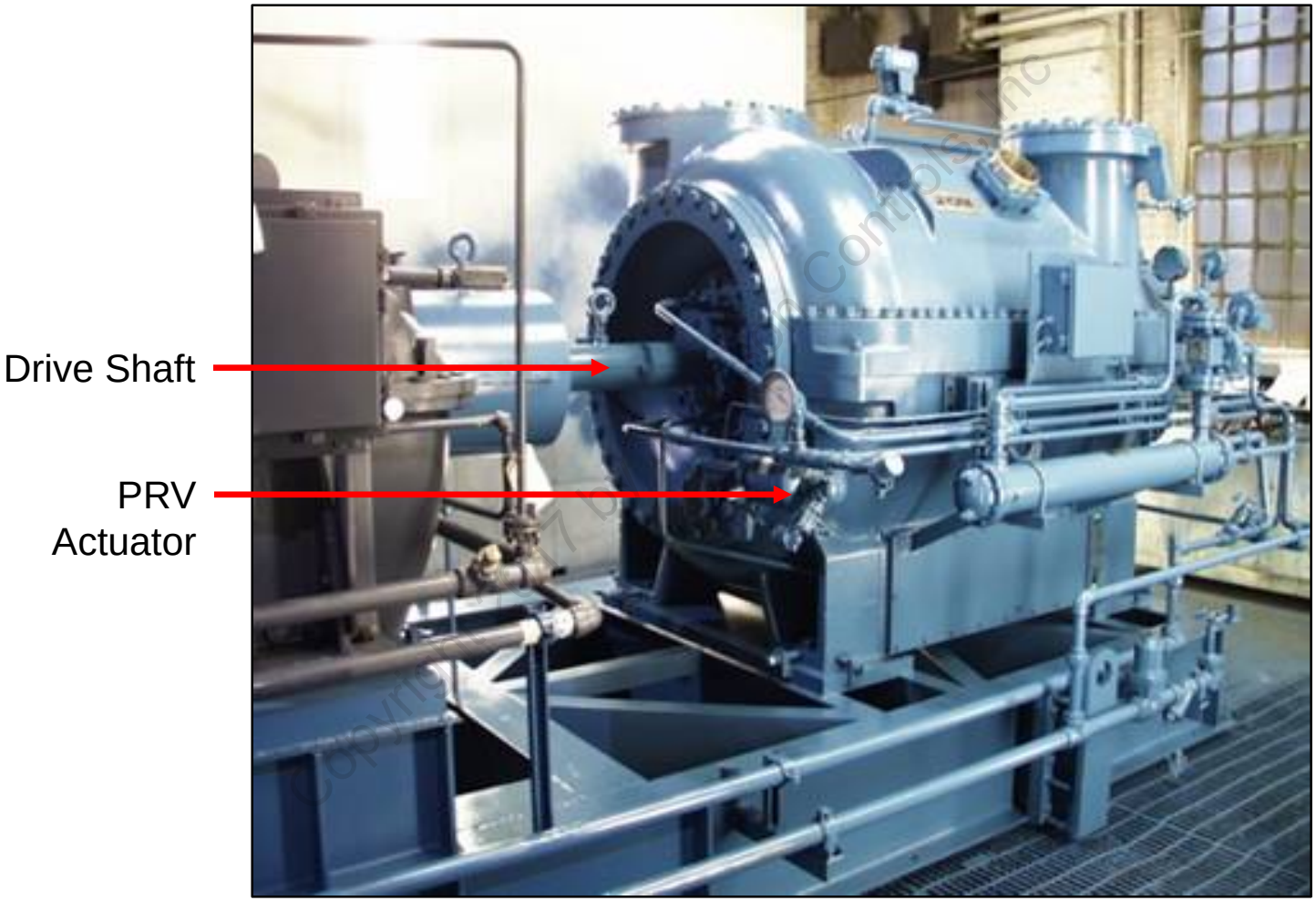

Copyright © 2017 Johnson Controls, Inc

Information Plate

Information Plate

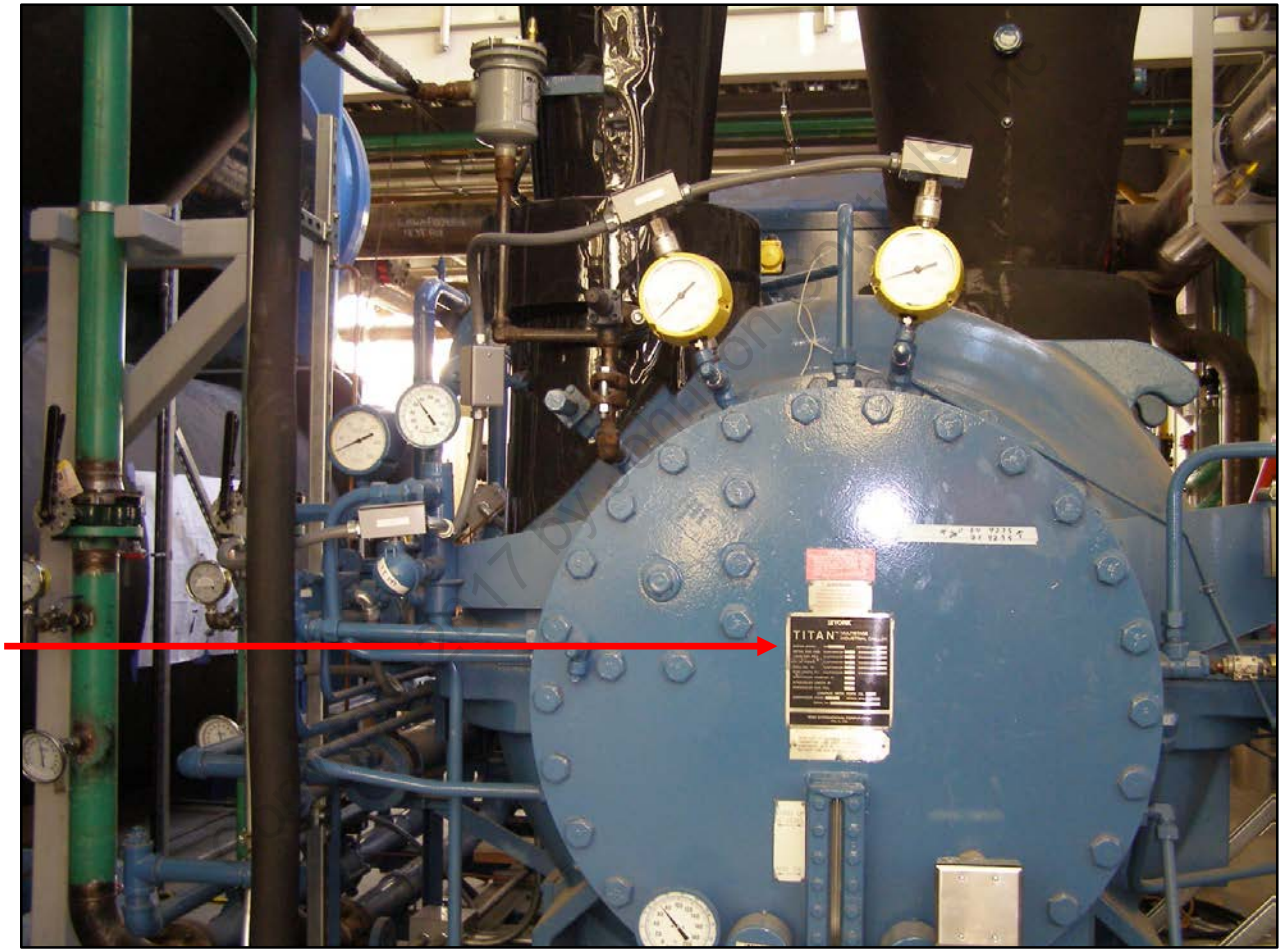

M Compressor—Cross-sectional View

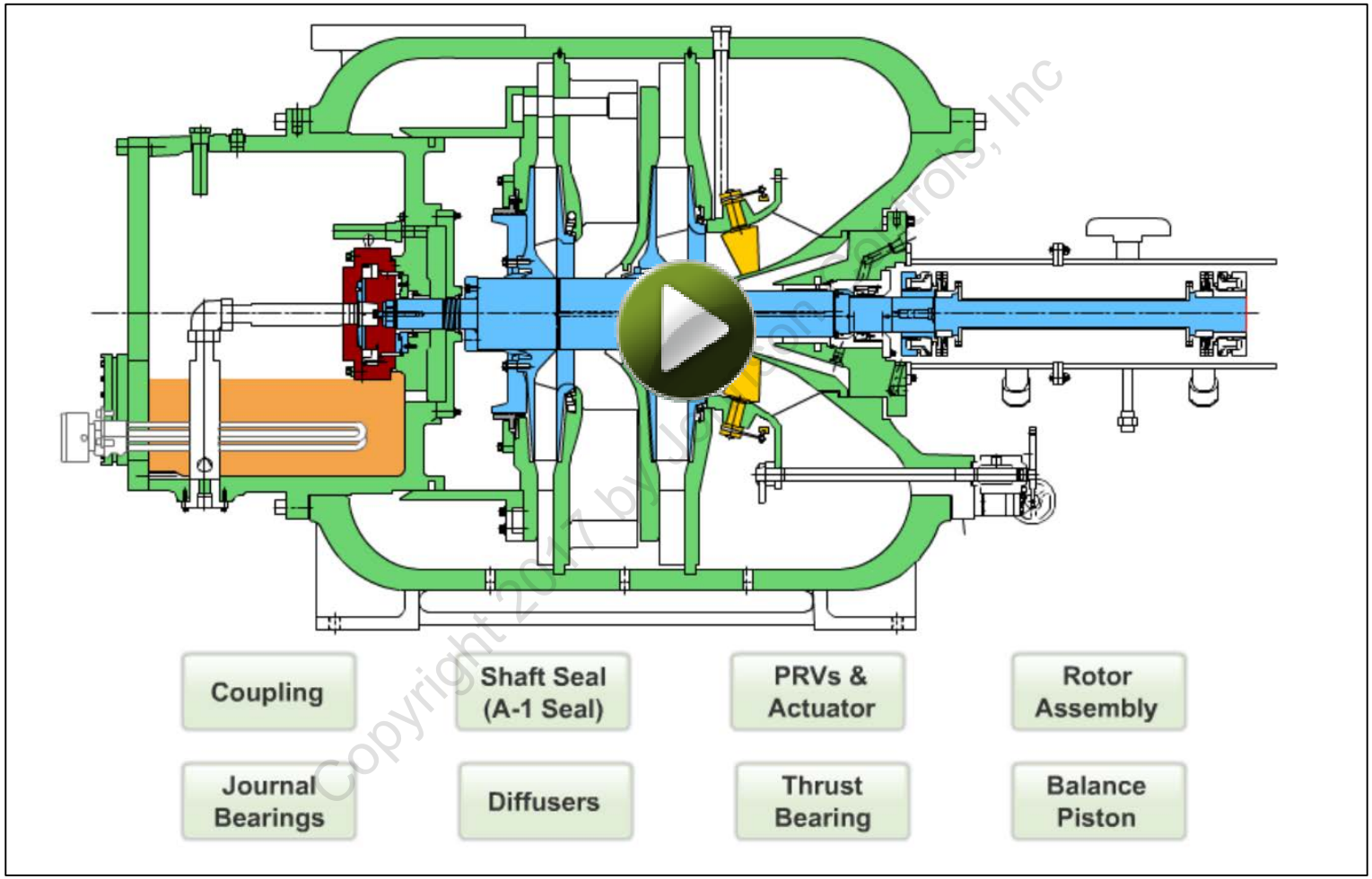

Copyright 2017 by Johnson Controls, Inc

Overall Gas Flow

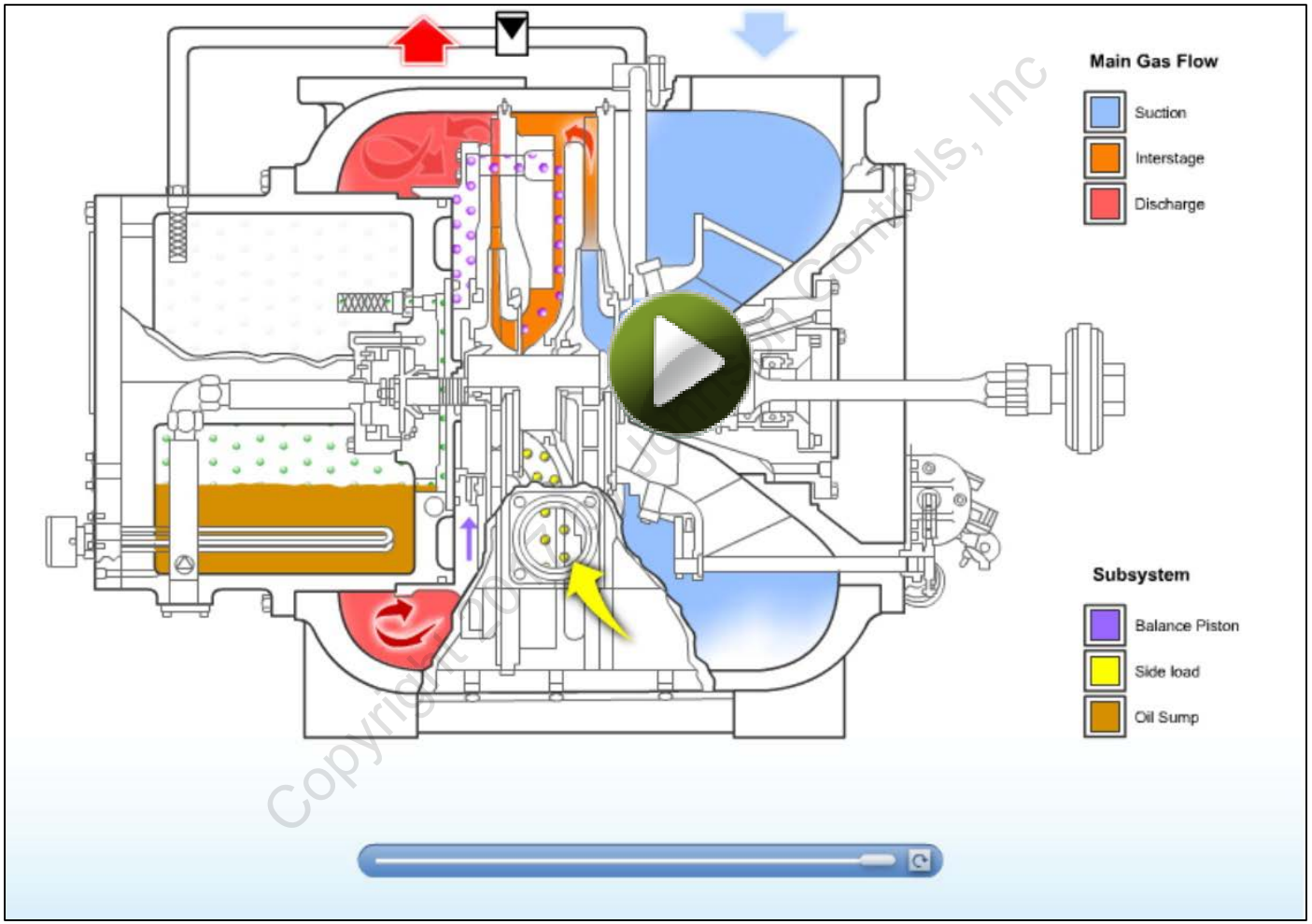

Discussion—Gas Flow in Different Compressors

Discuss and share the similarities and differences between gas flow of any centrifugal compressor and an M Compressor.

Copyright 2017 by Johnson Controls, Inc



Coupling

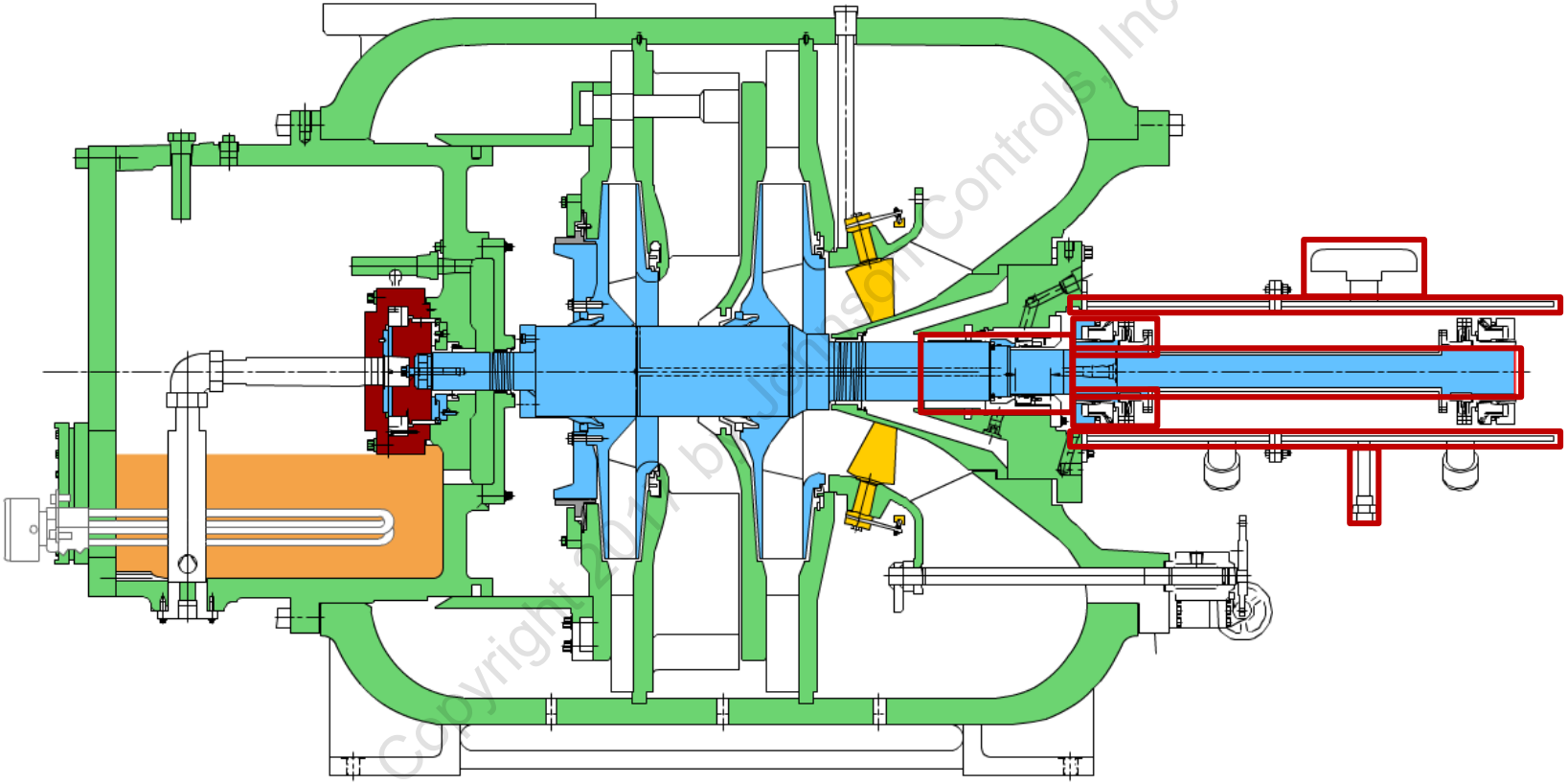

Our Policy prohibits printing. Save GREEN.

RiverHawk Coupling and Coupling Guard

Purpose: To connect the compressor to the driver or the gear box.

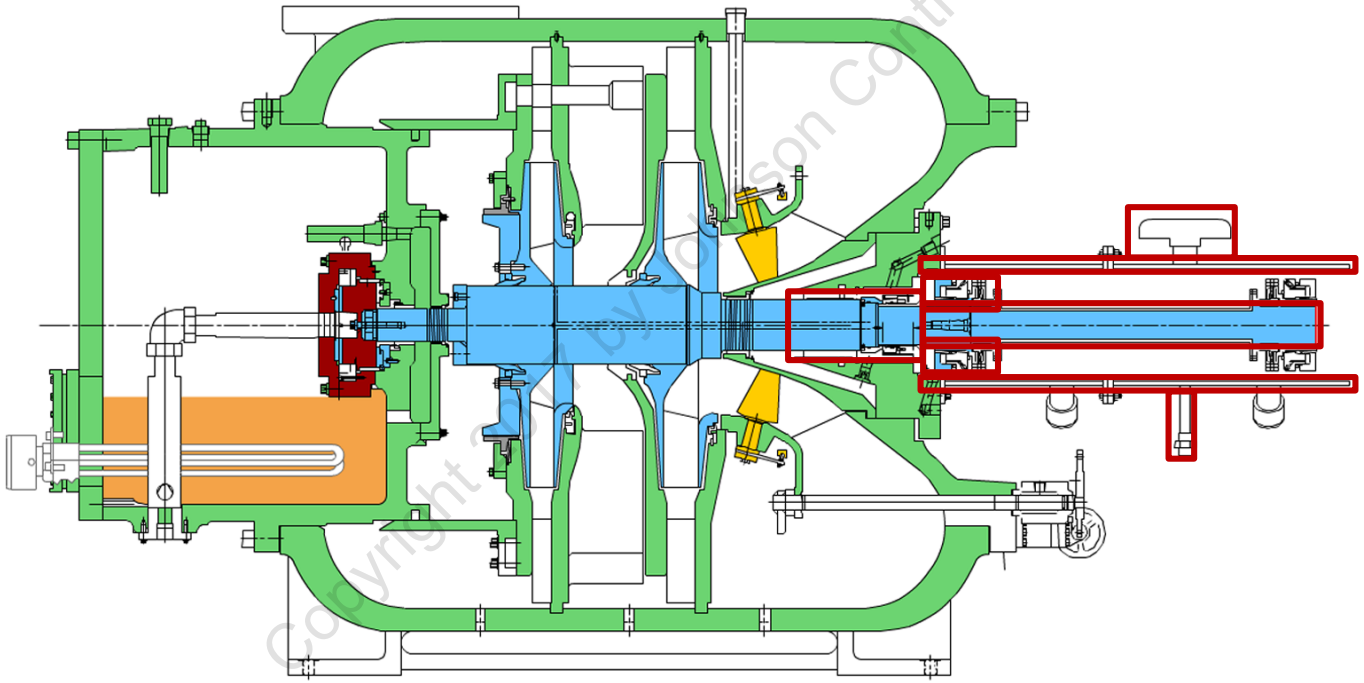

Copyright 2017 by Johnson Controls, Inc

RiverHawk Coupling and Coupling Guard (Cont'd.)

Purpose: To connect the compressor to the driver or the gear box.

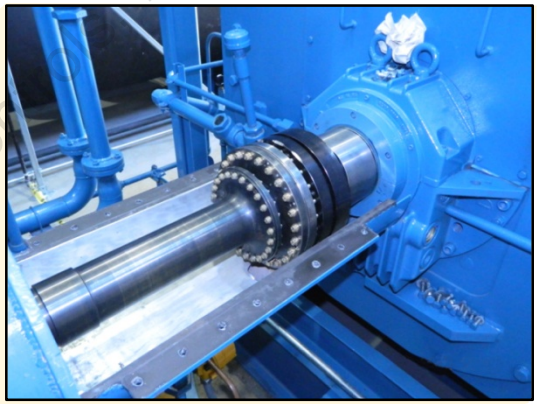

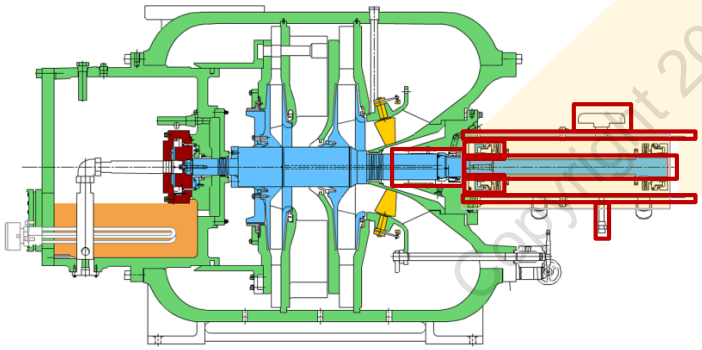

Copyright 2017 by Johnson Co... Inc

RiverHawk Coupling and Coupling Guard (Cont'd.)

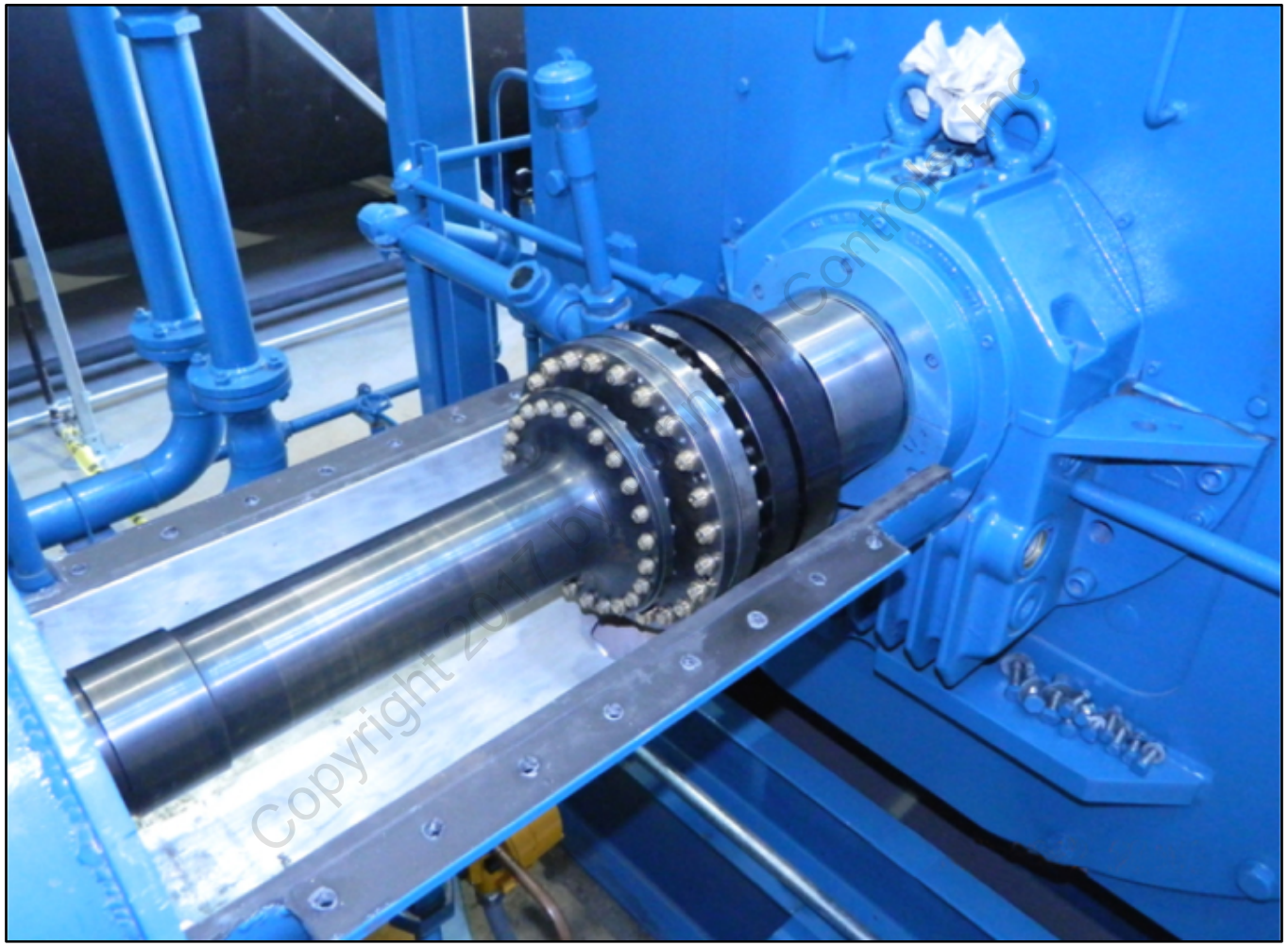

Copyright 2017 Johnson Controls, Inc.

Shaft Seal

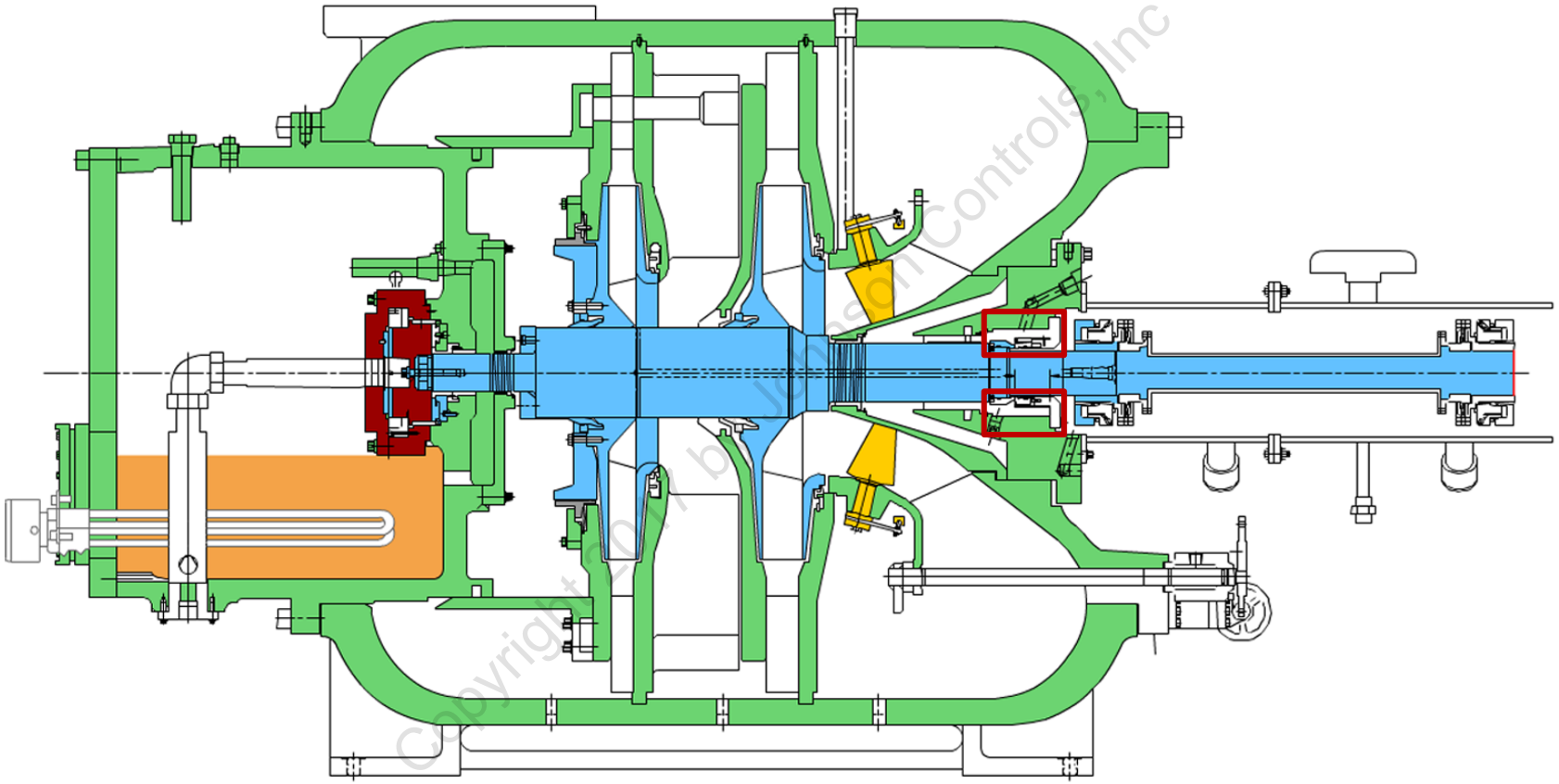

Shaft Seal (Cont'd.)

Purpose: To contain the refrigerant inside the compressor and prevent it from leaking into the atmosphere.

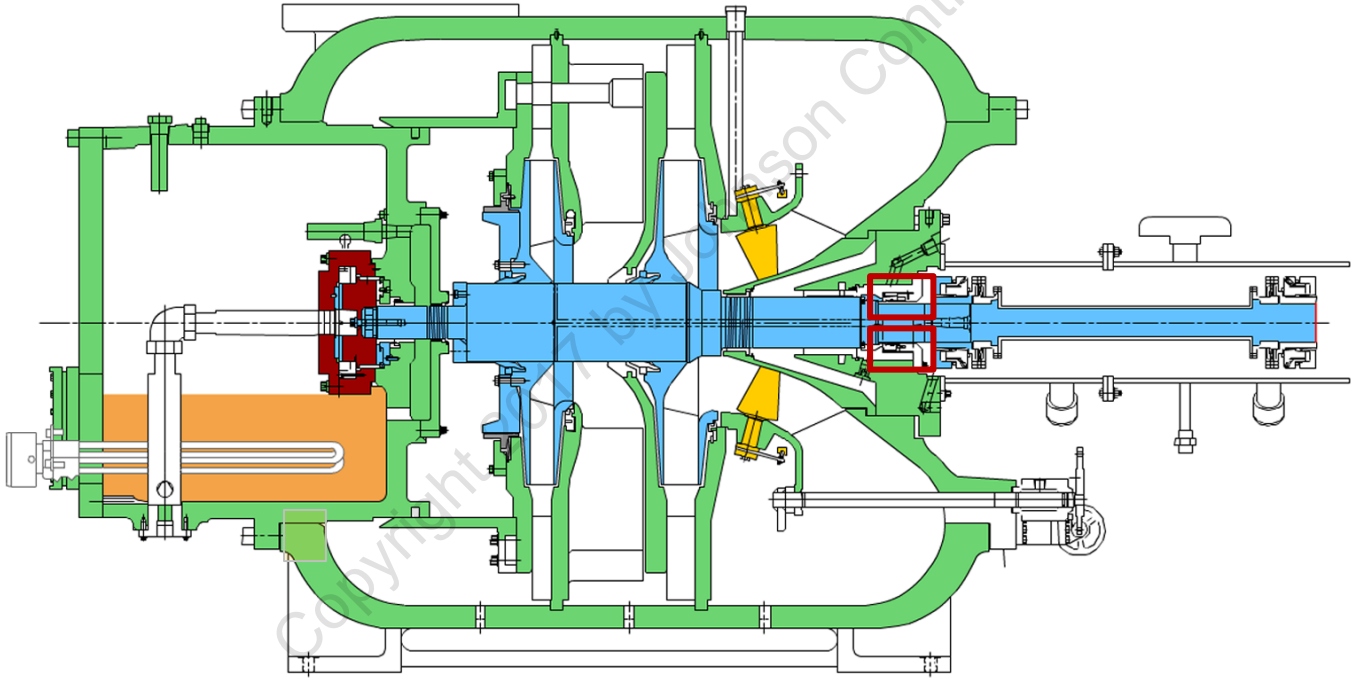

Copyright 2017 by Johnson Controls, Inc

Shaft Seal (Cont'd.)

Purpose: To contain the refrigerant inside the compressor and prevent it from leaking into the atmosphere.

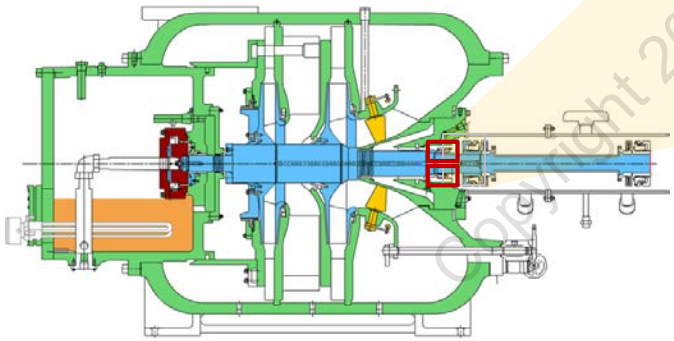



Copyright 2017 by Johnson Controls, Inc

Shaft Seal (Cont'd.)

Structure

- Stationary spring loaded carbon shaft seal ring assembly
- Rotating cast iron shaft seal collar with 'O' ring
- Seal cavity for circulation of oil



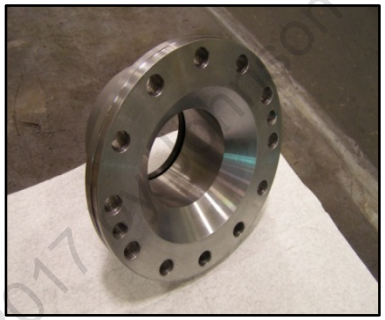

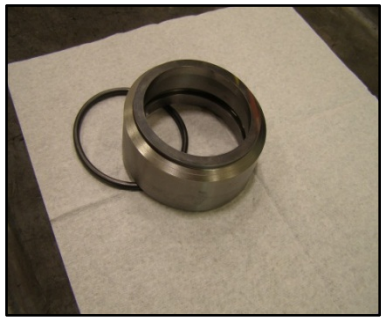

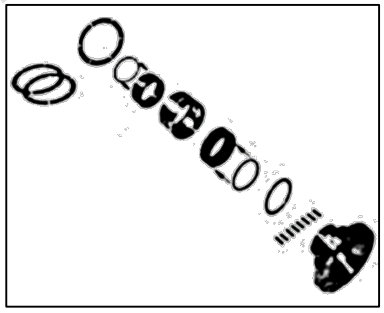

Copyright 2017 Johnson Controls, Inc

A-1 Seal

A-1 Seal

- Mainly used in air conditioning applications
- Mostly used in multistage compressors

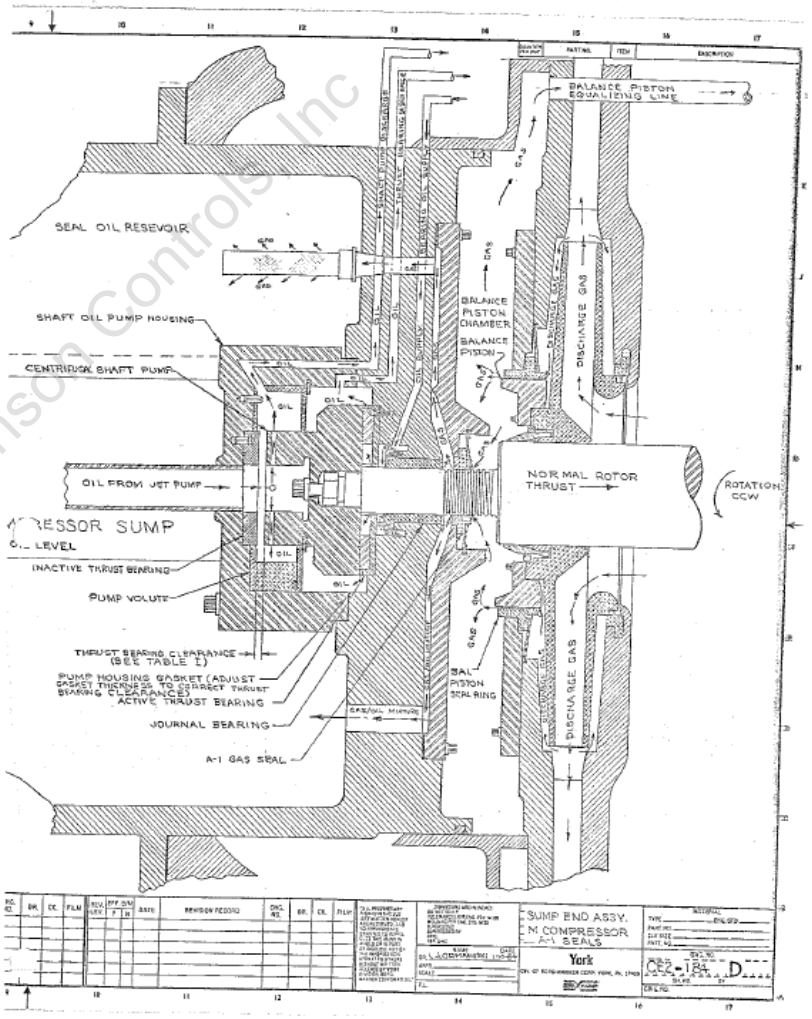

Copyright 2017 by Johnson Controls, Inc

Pre-rotation Vanes and Actuator

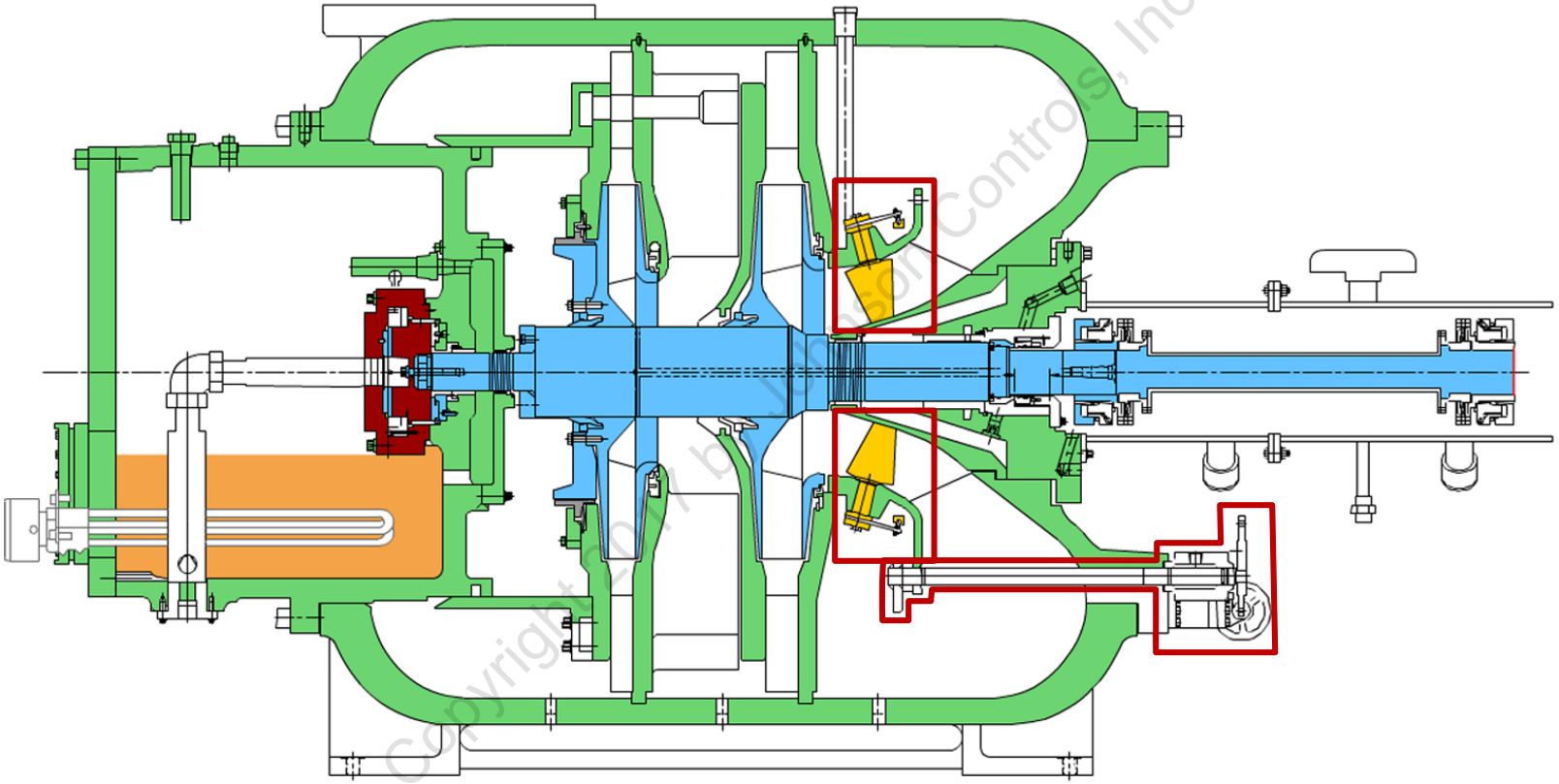

Pre-rotation Vanes

Purpose: To control the compressor capacity.

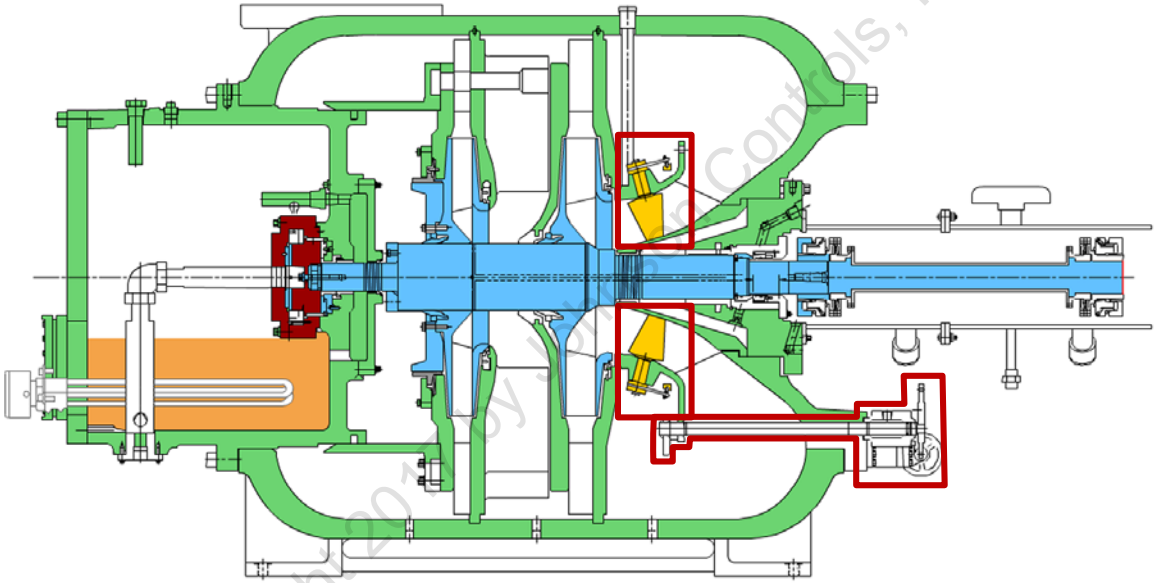

Why is it important to control the amount of refrigerant gas entering the compressor?

You need to control the amount of gas being pulled from the evaporator to keep the chilled water at the design temperature. This helps to provide efficient performance at variable load capacities.

Copyright 2013 by Johnson Controls, Inc

Pre-rotation Vanes (Cont'd.)

Purpose: To control the compressor capacity.

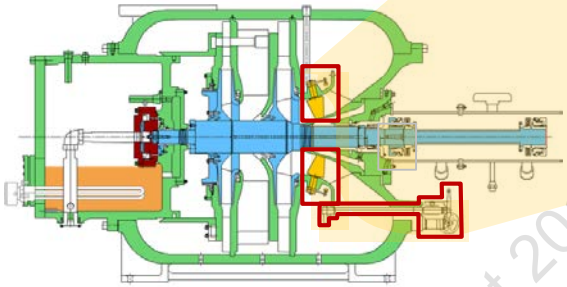

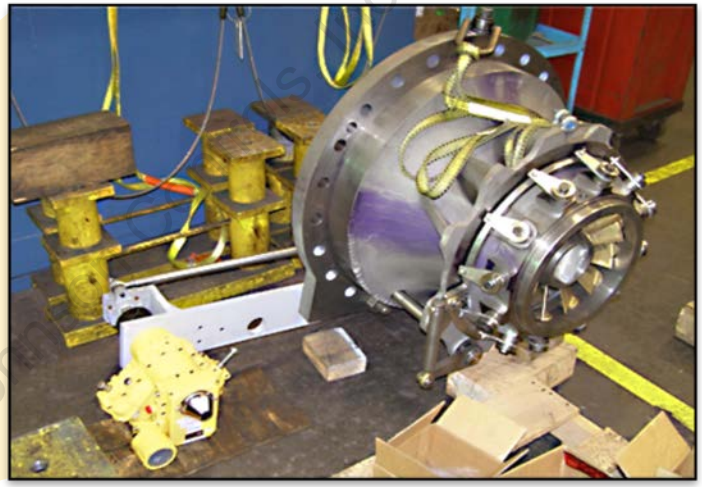

Copyright 2017 by Johnson Controls, Inc.

Why is it important to control the amount of refrigerant gas entering the compressor?

You need to control the amount of gas being pulled from the evaporator to keep the chilled water at the design temperature. This helps to provide efficient performance at variable load capacities.

Pre-rotation Vanes (Cont'd.)

Features

- Located at the suction end of the compressor
- Constructed of Manganese Bronze
- Mounts directly in the pre-rotation housing with no direct lubrication

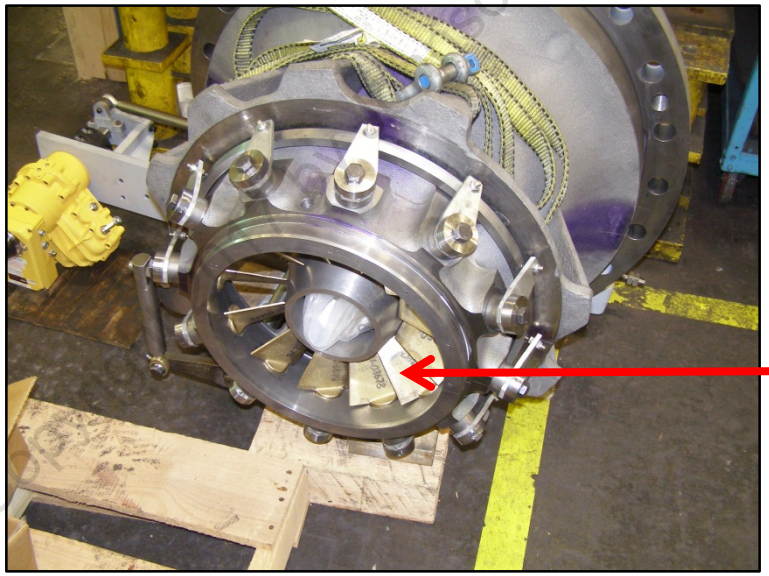

Copyright Johnson Controls, Inc

PRV Control

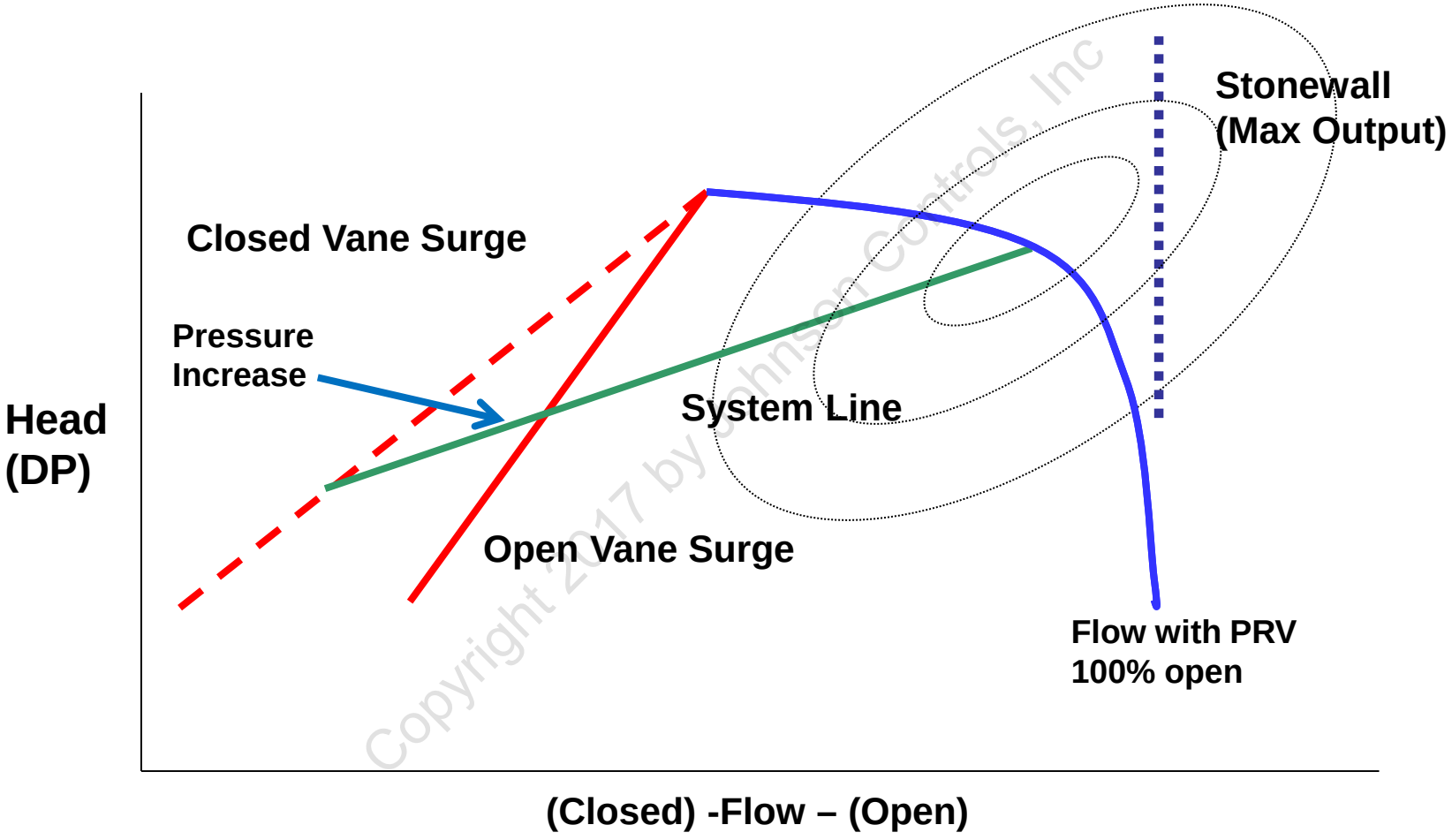

Copyright 2017 by Johnson Controls, Inc

PRV Control (Cont'd.)

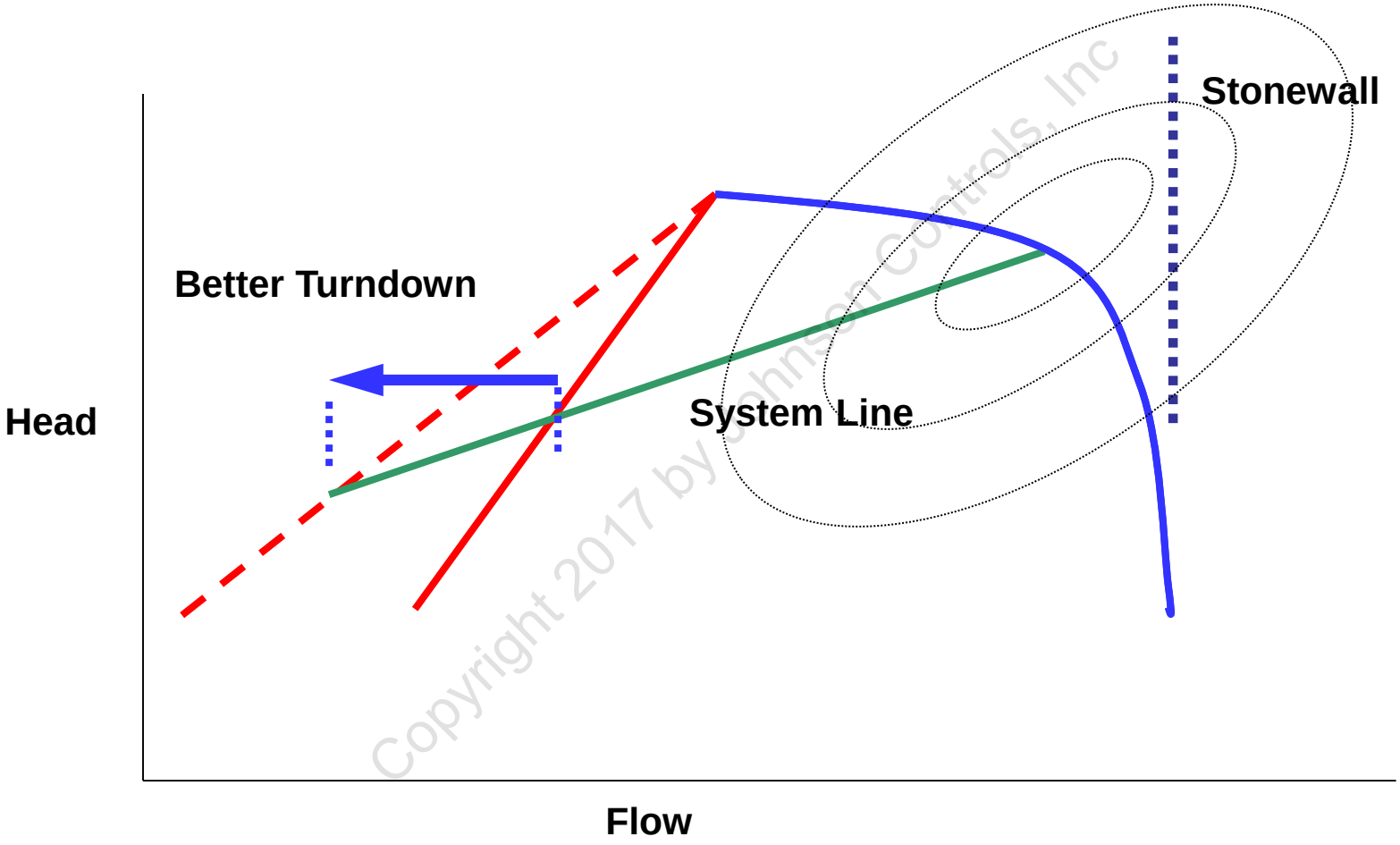

Copyright 2017 by Johnson Controls, Inc

Speed Control (Increase output with increased speed, but not with vanes)

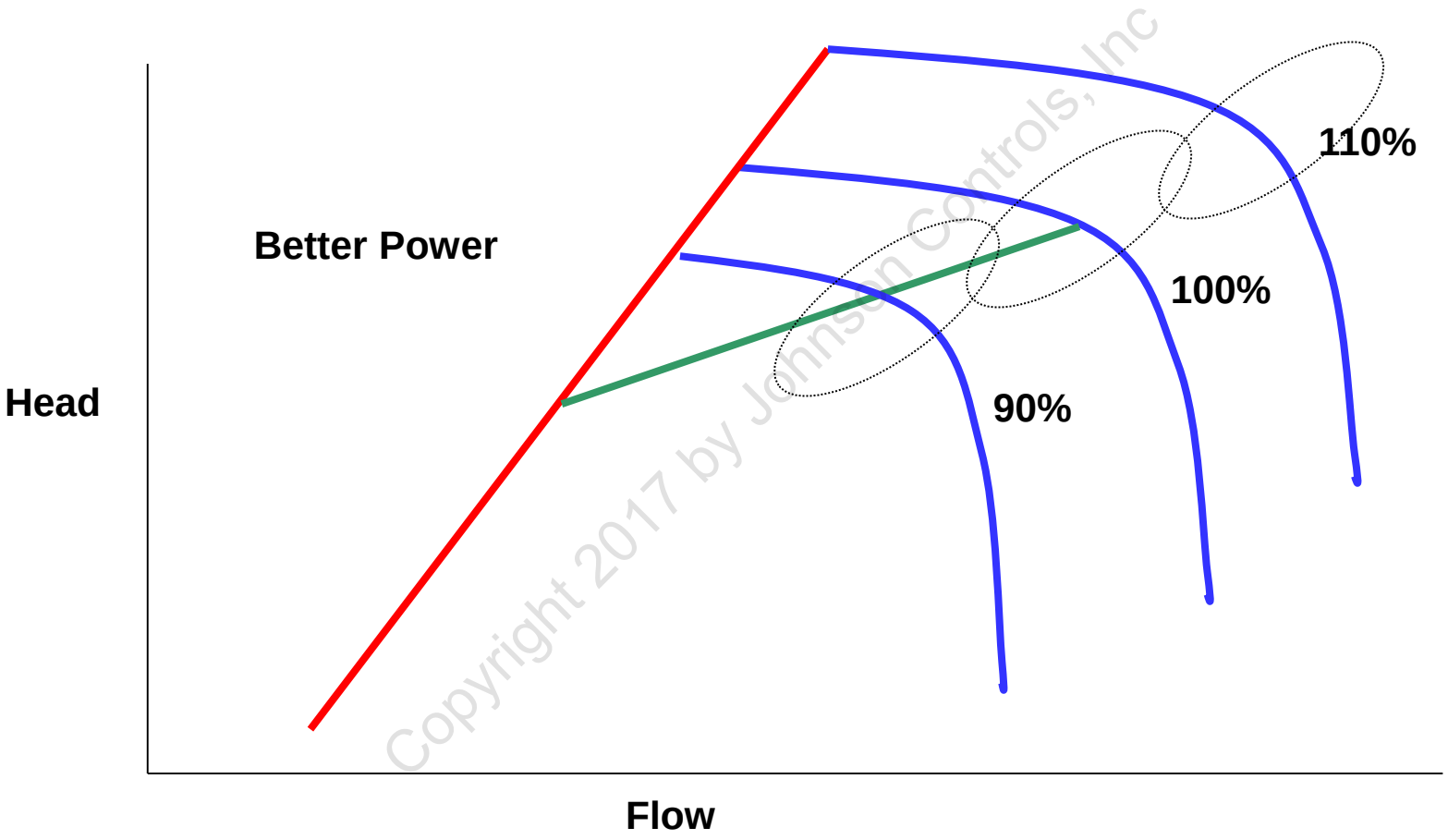

Copyright 2017 by Johnson Controls, Inc

Efficiency Comparison

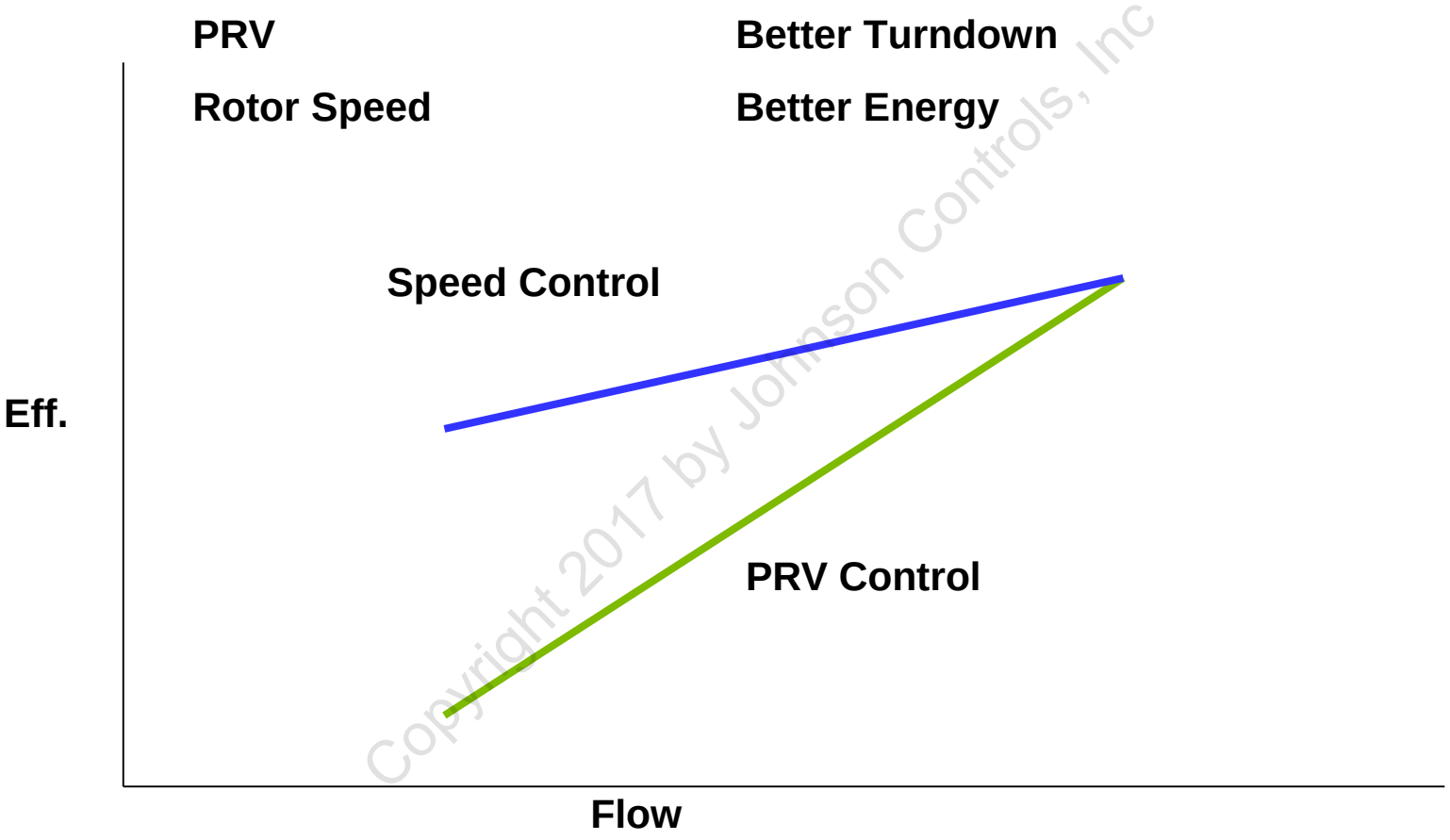

Copyright 2017 by Johnson Controls, Inc

Actuator

Purpose: To control the PRV position.

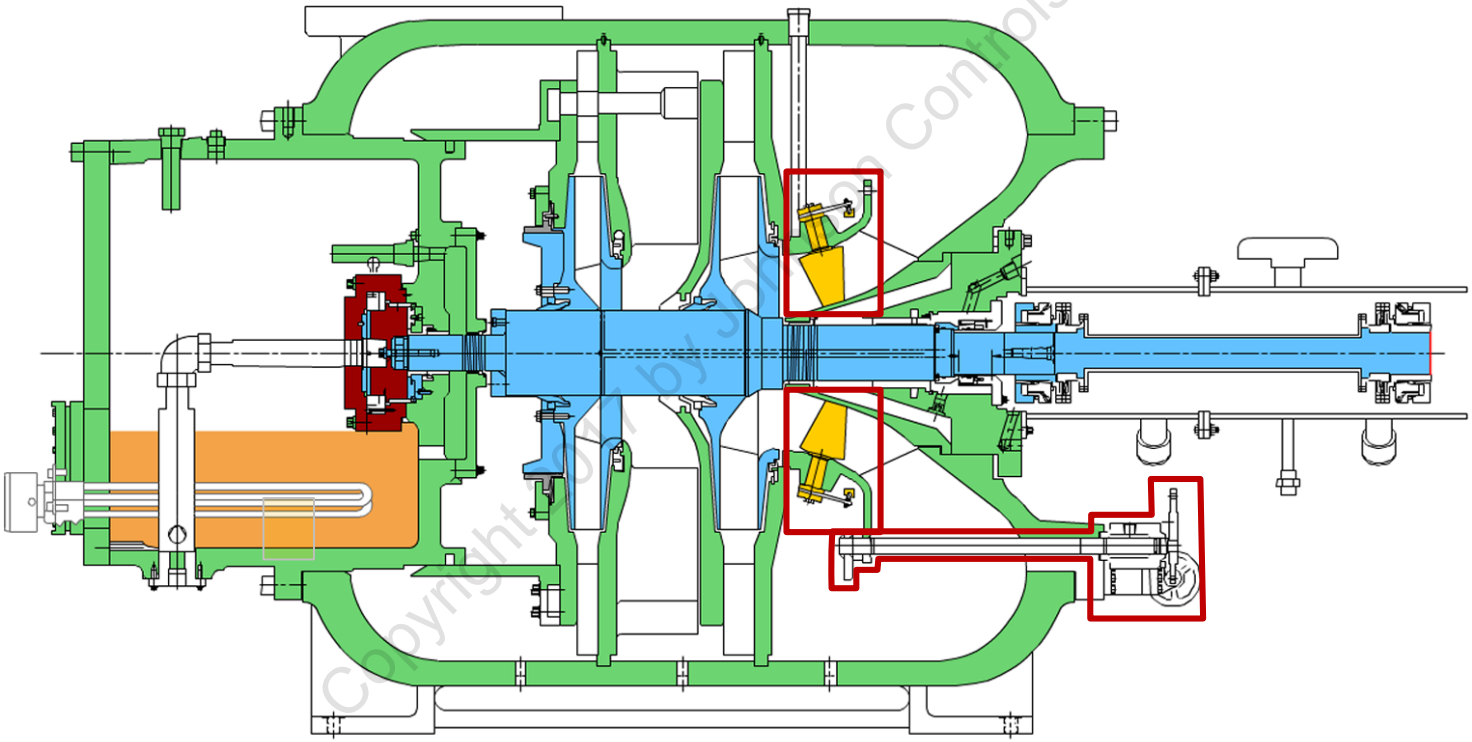

Copyright 2007 by Johnson Controls, Inc

Actuator (Cont'd.)

Purpose: To control the PRV position.

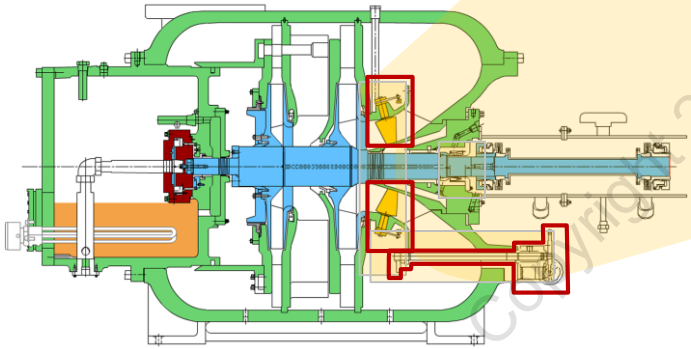

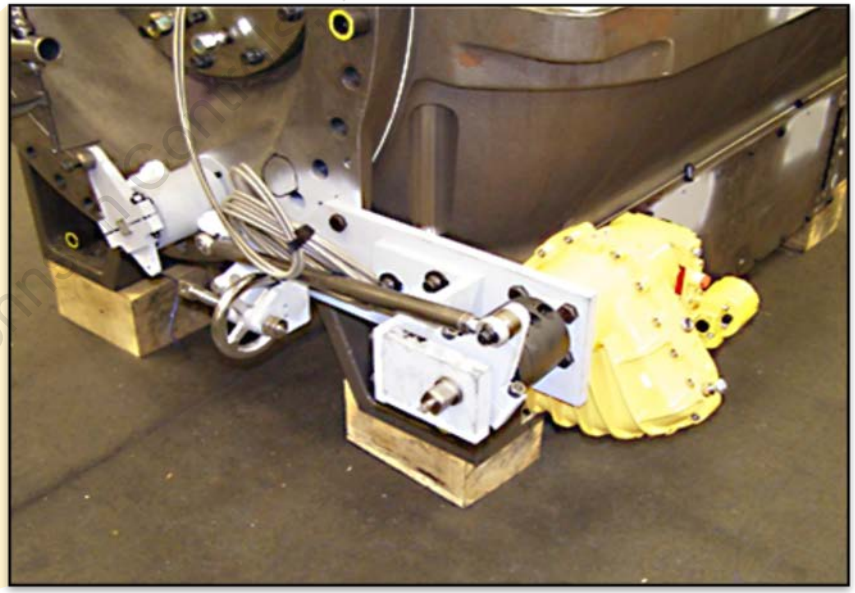

Copyright 2017 by Johnson Controls Inc

Actuator (Cont'd.)

Features

- Can be electric, pneumatic, or manual
- Receives signal from the control panel



Old Style



New Style



Copyright 2017 by Johnson Controls

Discussion—PRV Malfunction

Discuss the reasons and effects of PRV malfunctioning.

Provide opinions of what causes actuator failures in your part of the world.

Copyright 2017 by Johnson Controls, Inc



Rotor Assembly

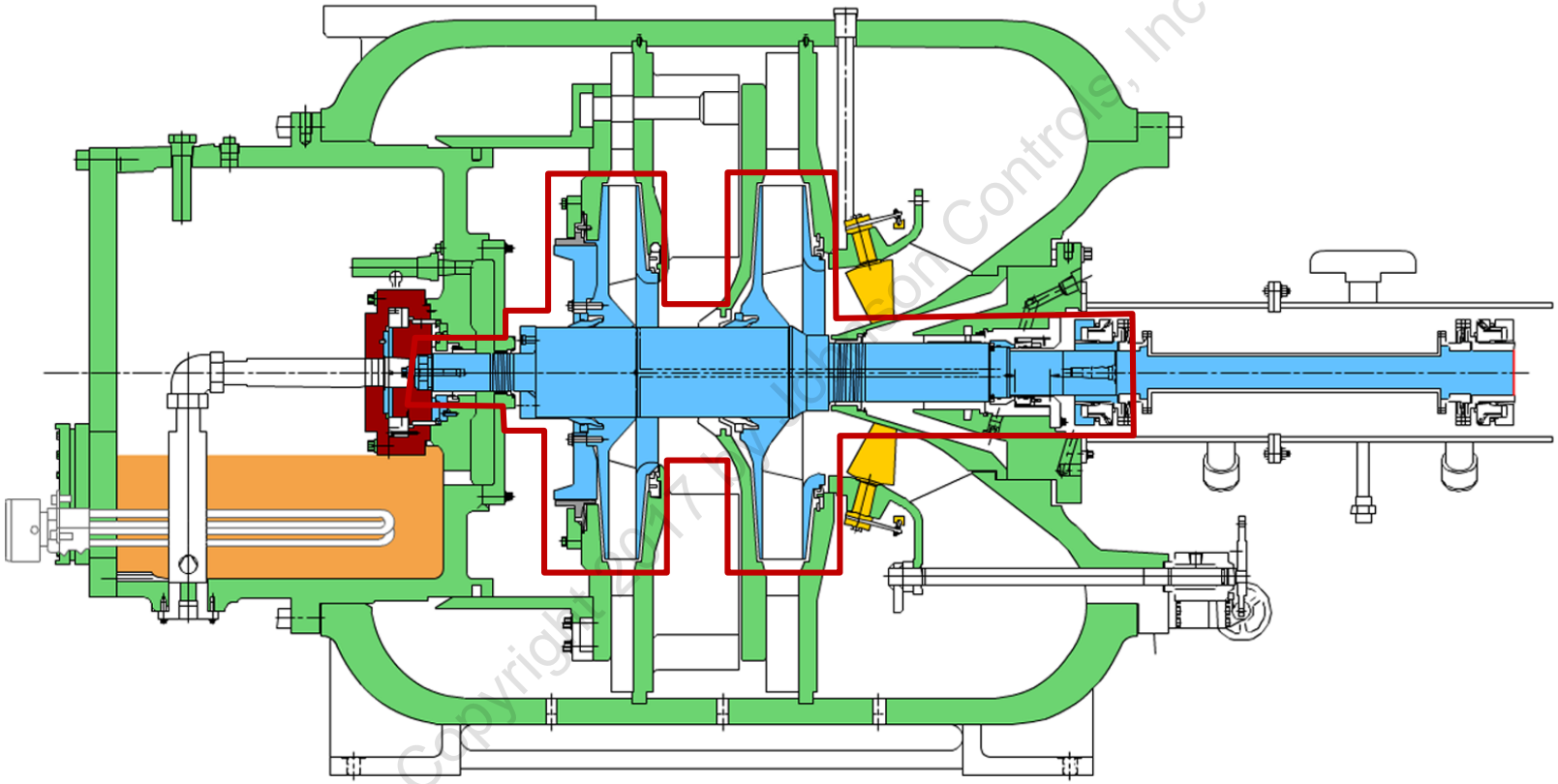

Copyright 2017 Johnson Controls, Inc

Rotor Assembly (Cont'd.)

Rotor Assembly: Consists of a metal shaft with impellers mounted on it with collets.

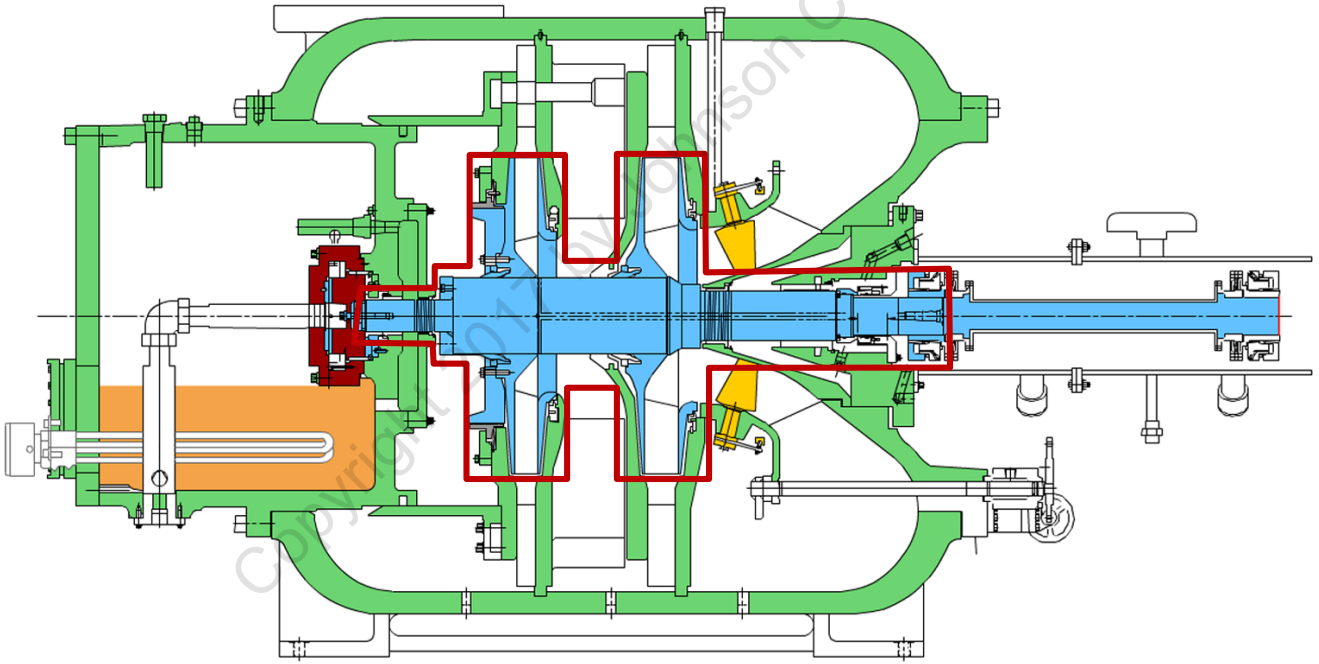

Copyright © 2014 Johnson Controls, Inc

Rotor Assembly (Cont'd.)

Rotor Assembly: Consists of a metal shaft with impellers mounted on it with collets.



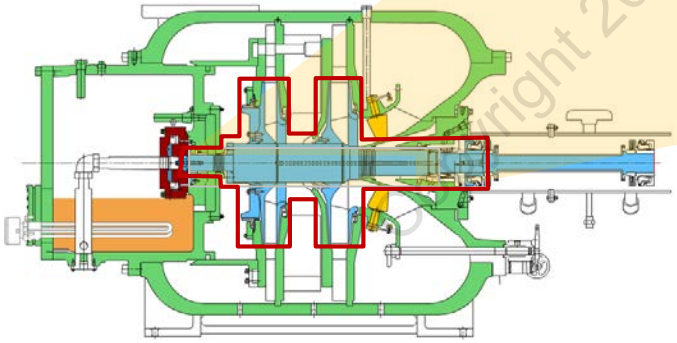

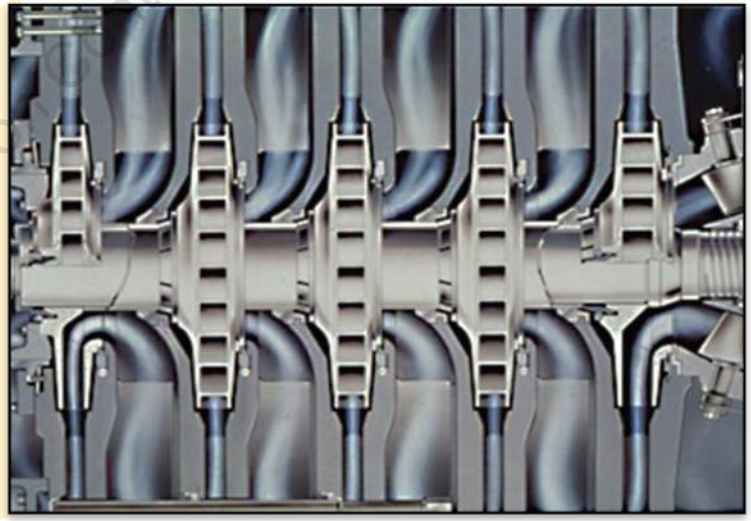

Copyright 2017 by Johnson Controls, Inc

Drive Shaft

Purpose: To transmit rotation to the compressor and provide access to the shaft seal.

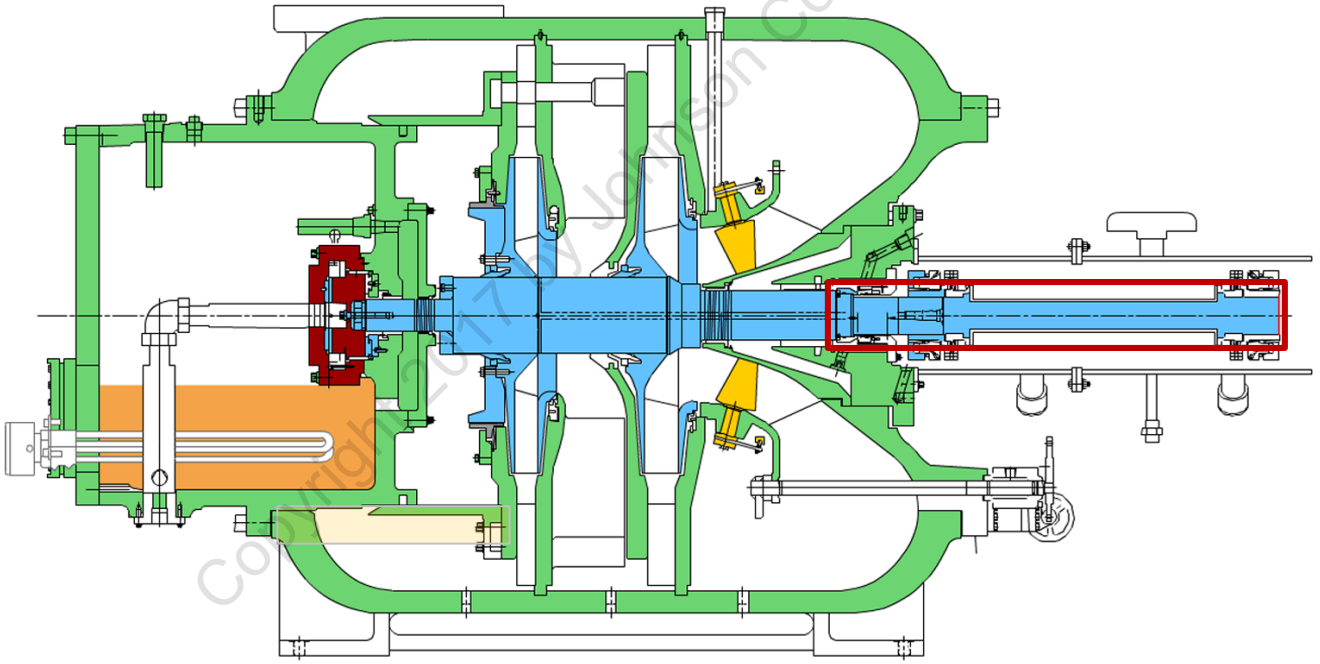

Copyright 2017 by Johnson Controls, Inc

Drive Shaft (Cont'd.)

Purpose: To transmit rotation to the compressor and provide access to the shaft seal.

The picture is a Ameriflex coupling by Riverhawk.

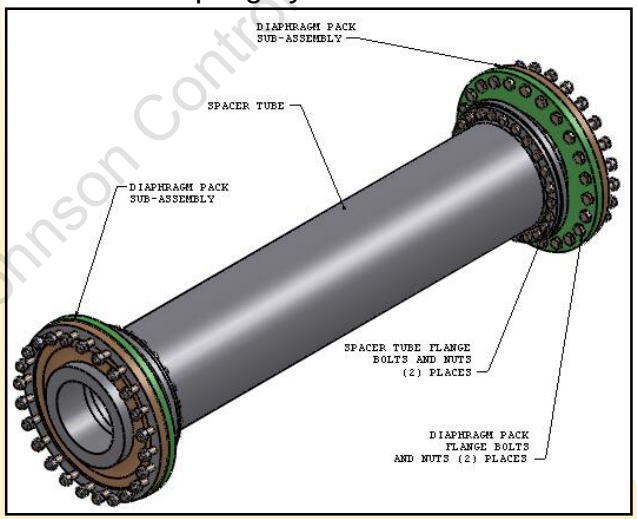

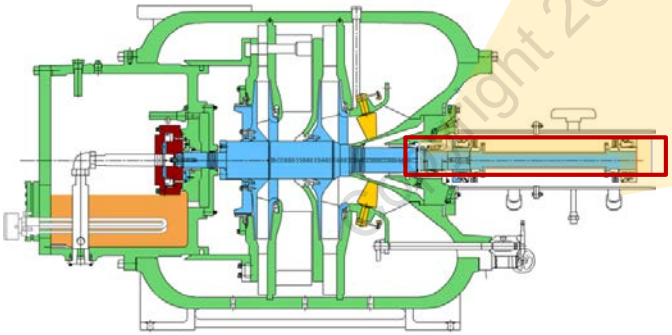

Copyright 2017 by Johnson Controls Inc

Drive Shaft (Cont'd.)

Features

- One long shaft of alloy steel piece with a shaft cover
- Highly reliable
- Lower cost of operation (no lubrication required)



Copyright 2017 by Johnson Controls, Inc

Impellers

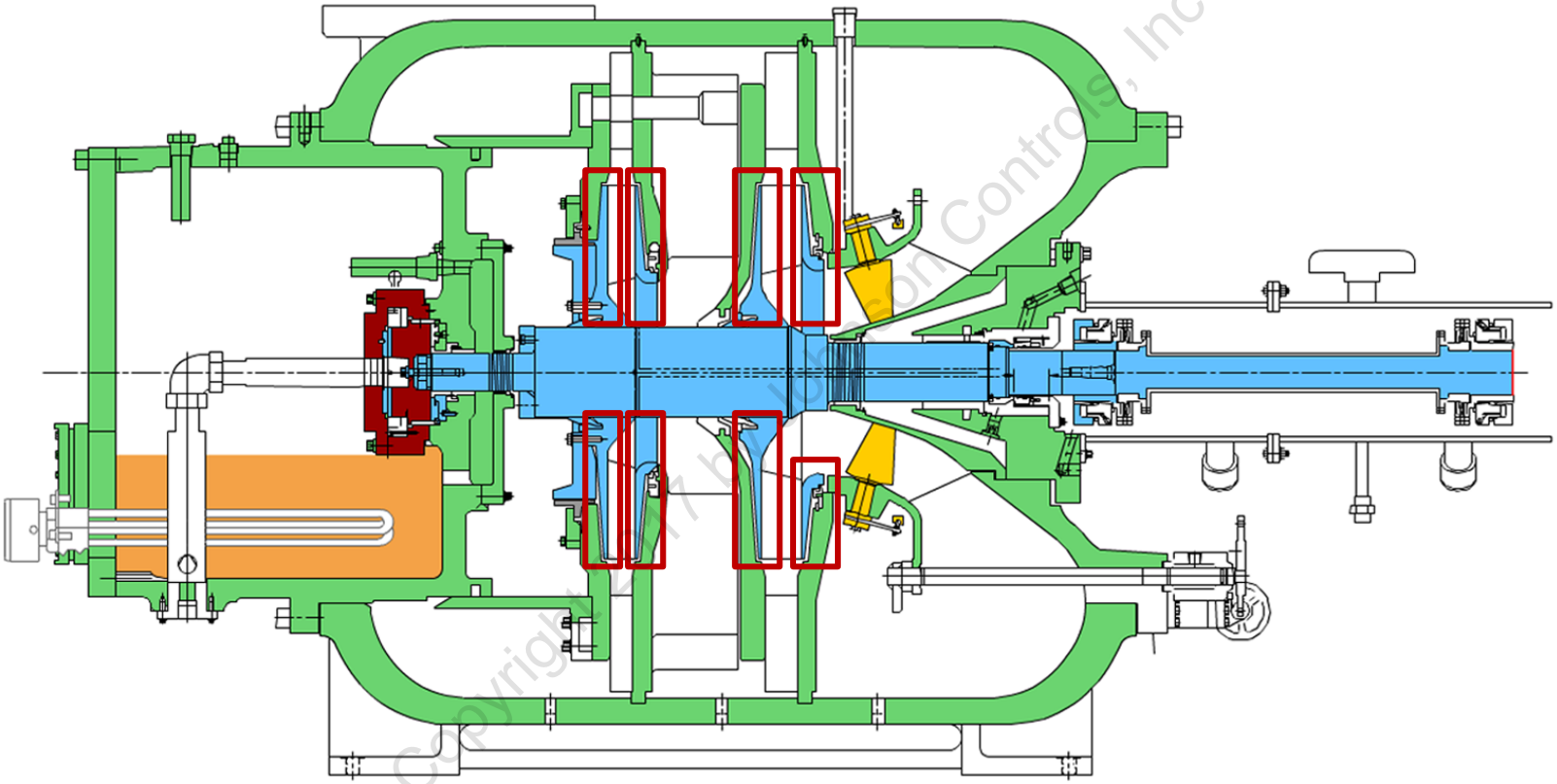

Copyright 2017 by Johnson Controls, Inc

Impellers (Cont'd.)

Purpose: To accelerate the entering low pressure, low temperature refrigerant vapor into high pressure refrigerant vapor.

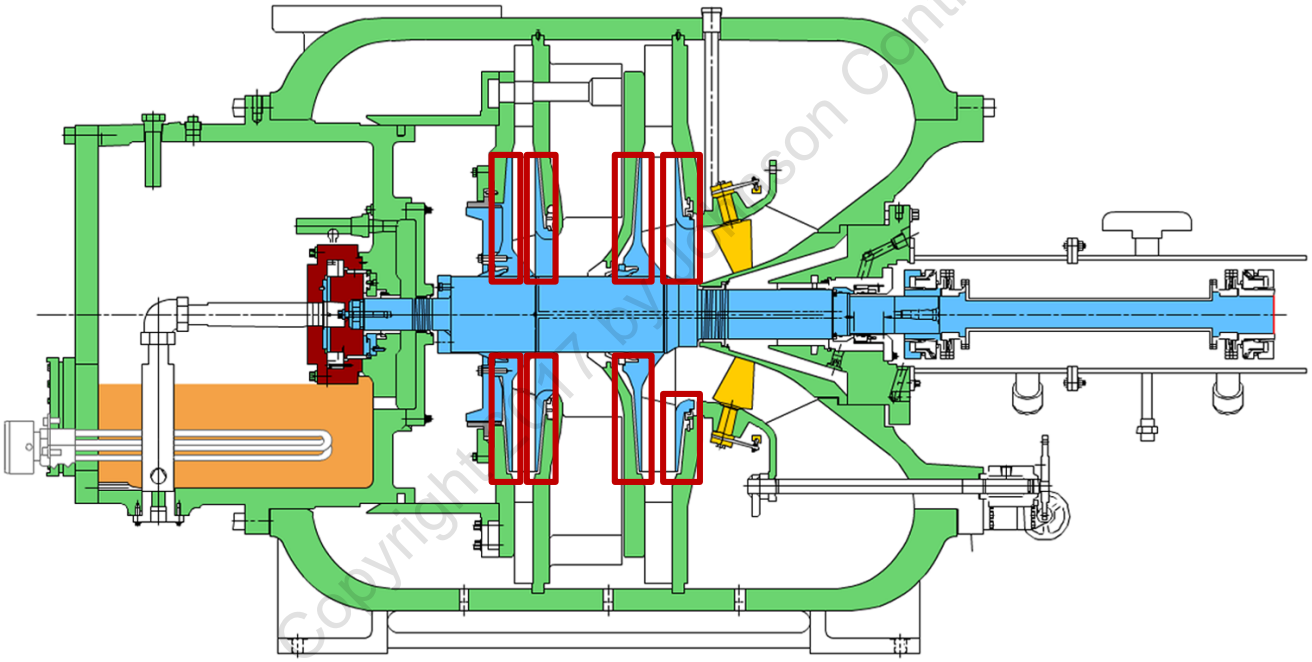

Copyright © 2007 by Johnson Controls, Inc

Impellers (Cont'd.)

Purpose: To accelerate the entering low pressure, low temperature refrigerant vapor into high pressure refrigerant vapor.

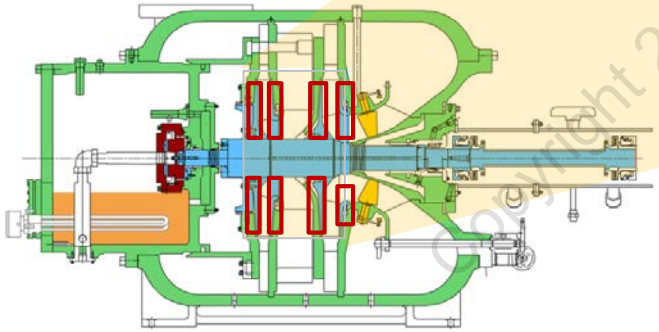

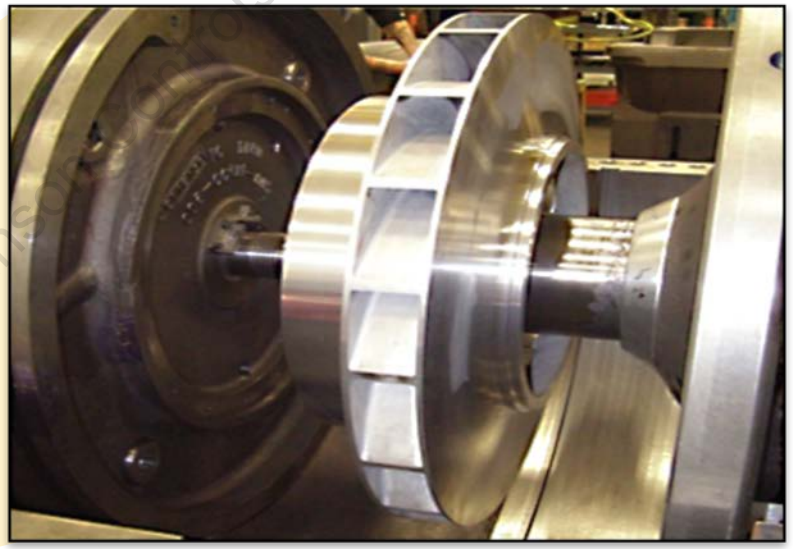

Copyright 2017 by Johnson Controls, Inc

Impellers (Cont'd.)

Structure

- Shrouded impeller design
- Blade height varies based on casing size
- Shrink or collet/clamp ring mounting

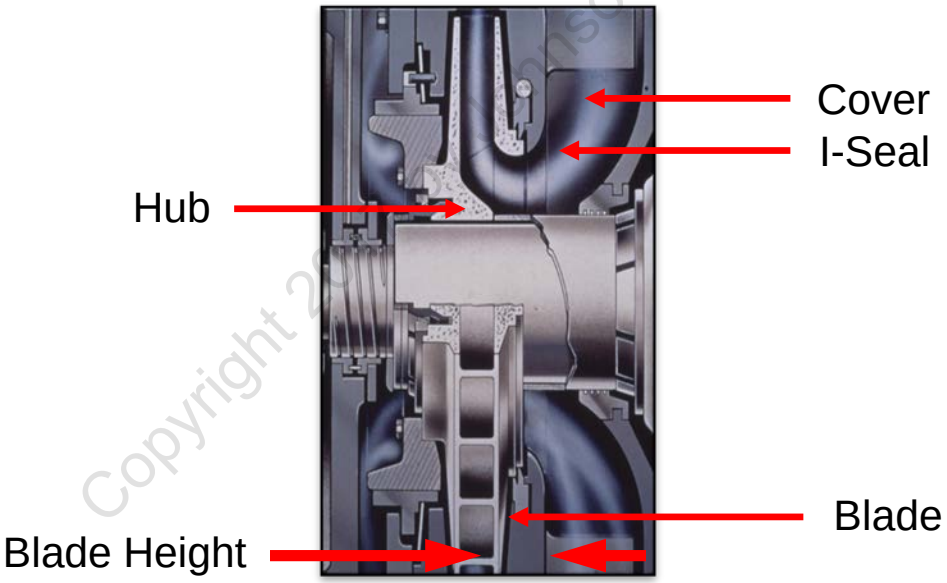

Copyright 2014 Johnson Controls, Inc

Impellers (Cont'd.)

Features

- Made of aluminum or steel
- Lighter shaft weight
- Lower energy
- No stress concentration on the shaft from key ways

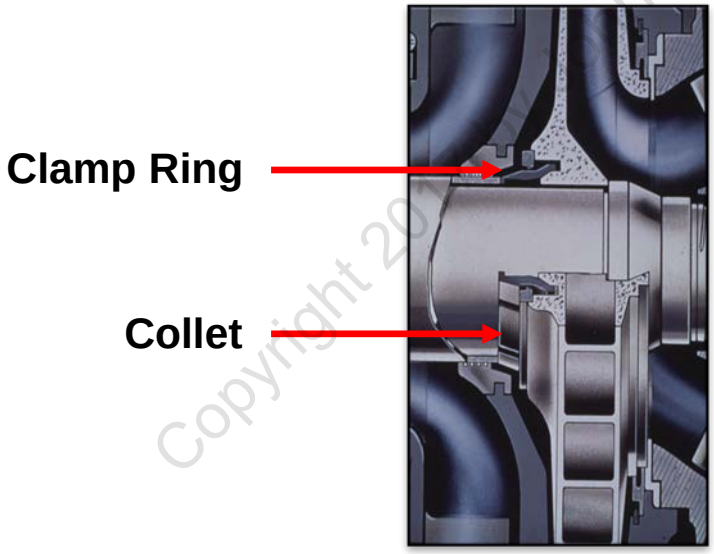

Copyright 2014 Johnson Controls, Inc

Impeller Models

20 Blades
5x4 Groups
Diameter = A or B
Height = 8 to 07

Model	B	A
25 (in)	8.25	10.00
26	12.20	14.80
38	18.00	21.90
55	26.70	31.50

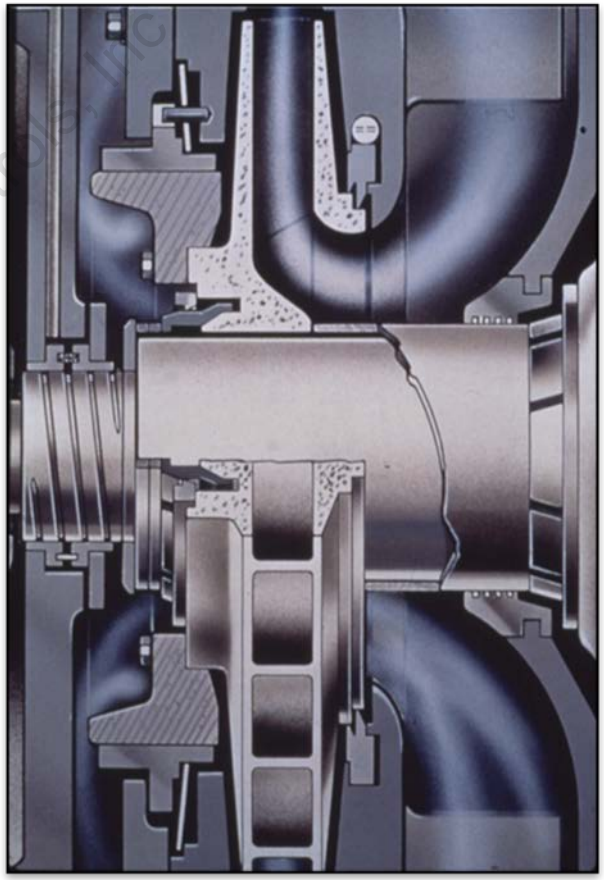

Copyright 2017 by Johnson Controls, Inc.

Impellers—How Do They Work?

Producing Head (Refer to Instructor and workbook notes)

Accelerate Flow (Kinetic Energy)

Kinetic Energy → Pressure Energy

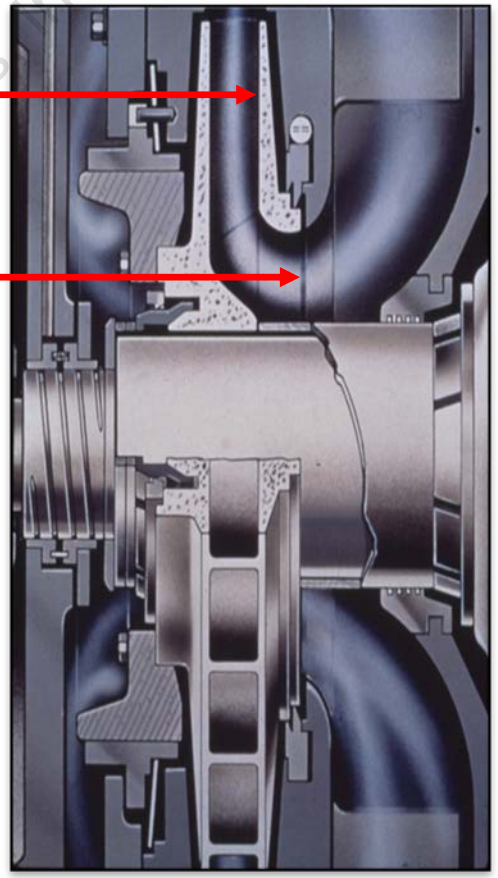

Copyright 2017 by Johnson Controls, Inc

Labyrinth Seal

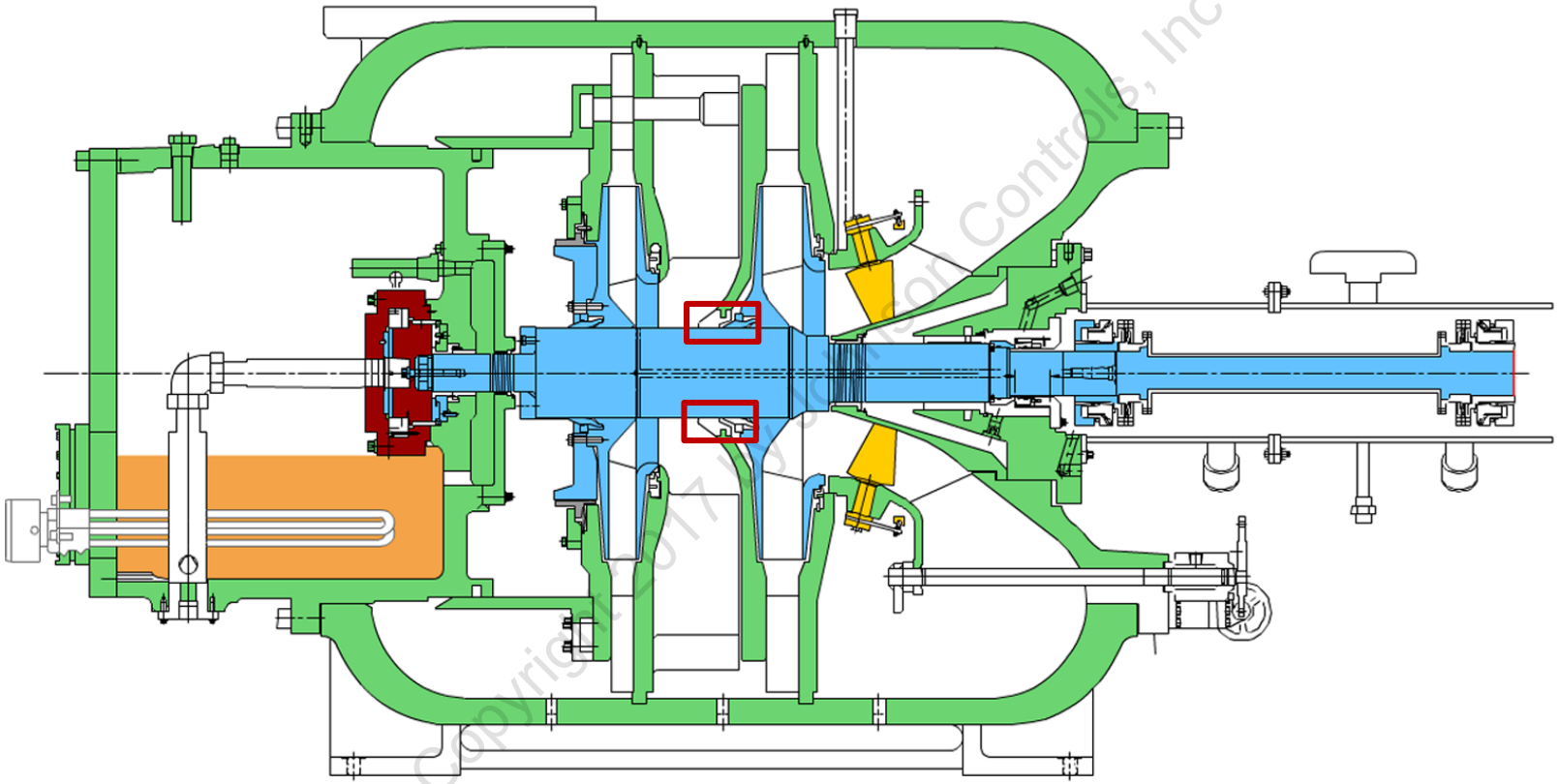

Copyright 2017 Johnson Controls, Inc

Interstage Labyrinth Seal

In a multistage compressor, what stops the high pressure refrigerant vapor from leaking into the low pressure 1st stage impeller?

Purpose: To prevent the high-pressure gas from leaking across the seal face and re-entering the suction

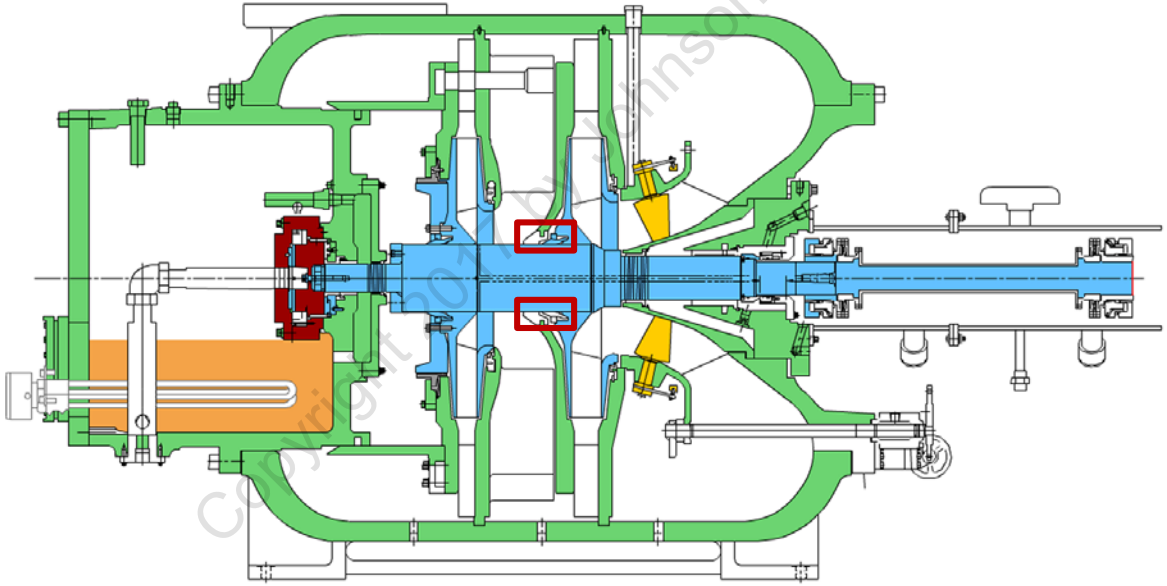

Copyright 2017 by Johnson Controls, Inc

Interstage Labyrinth Seal (Cont'd.)

In a multistage compressor, what stops the high pressure refrigerant vapor from leaking into the low pressure 1st stage impeller?

Purpose: To prevent the high-pressure gas from leaking across the seal face and re-entering the suction

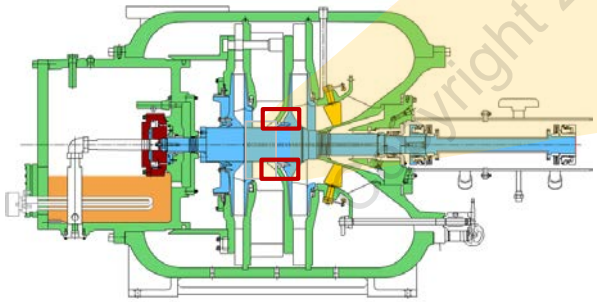

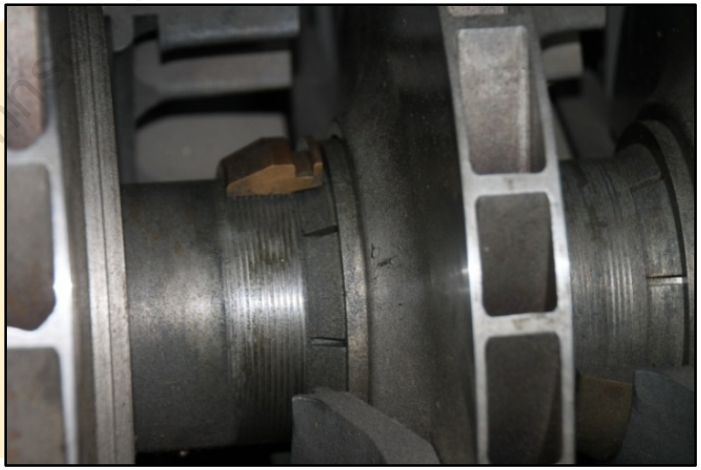

Copyright 2017 by Johnson Controls, Inc

Interstage Labyrinth Seal (Cont'd.)

Features

- Floating and self-centering
- Non-contacting
- Utilizes a hurdle-type flow path between stationary and rotating components
- Maintains balance of axial loading
- Reduces internal bypass of refrigerant gas

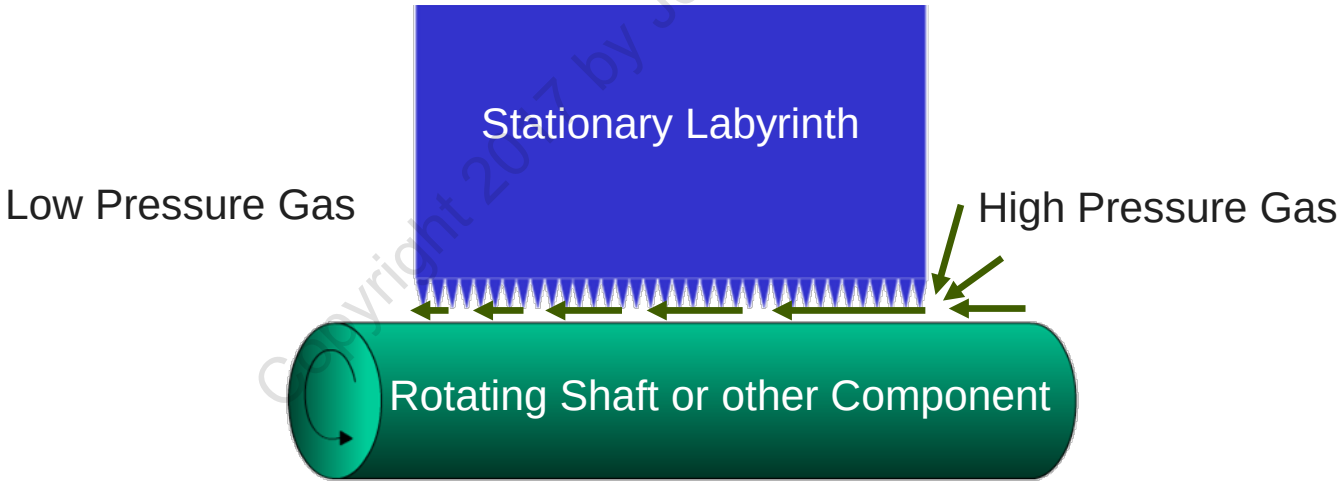

Copyright 2017 by Johnson Controls, Inc

Interstage Labyrinth Seal (Cont'd.)



Shaft Labyrinth Behind Impeller 1



Shaft Labyrinth Behind Impeller 2

Copyright 2017 by Johnson Controls Inc

Check Your Understanding—1

Which of the following pressures and axial forces act on the impeller and impeller assembly?

- ☐ Low pressure at the eye of the impeller generates axial force in the direction of the suction line.
- ☐ Pressure on the back-side of the impeller is in the direction of suction.
- ☐ Force is generated by the discharge gas on the front of the impeller shroud.
- ☑ All of the above.

Copyright 2017 by Johnson Controls, Inc



Discussion—Lab Seal Failure

Discuss the reasons for Lab seal wear or seal failure.

Copyright 2017 by Johnson Controls, Inc



Journal Bearings

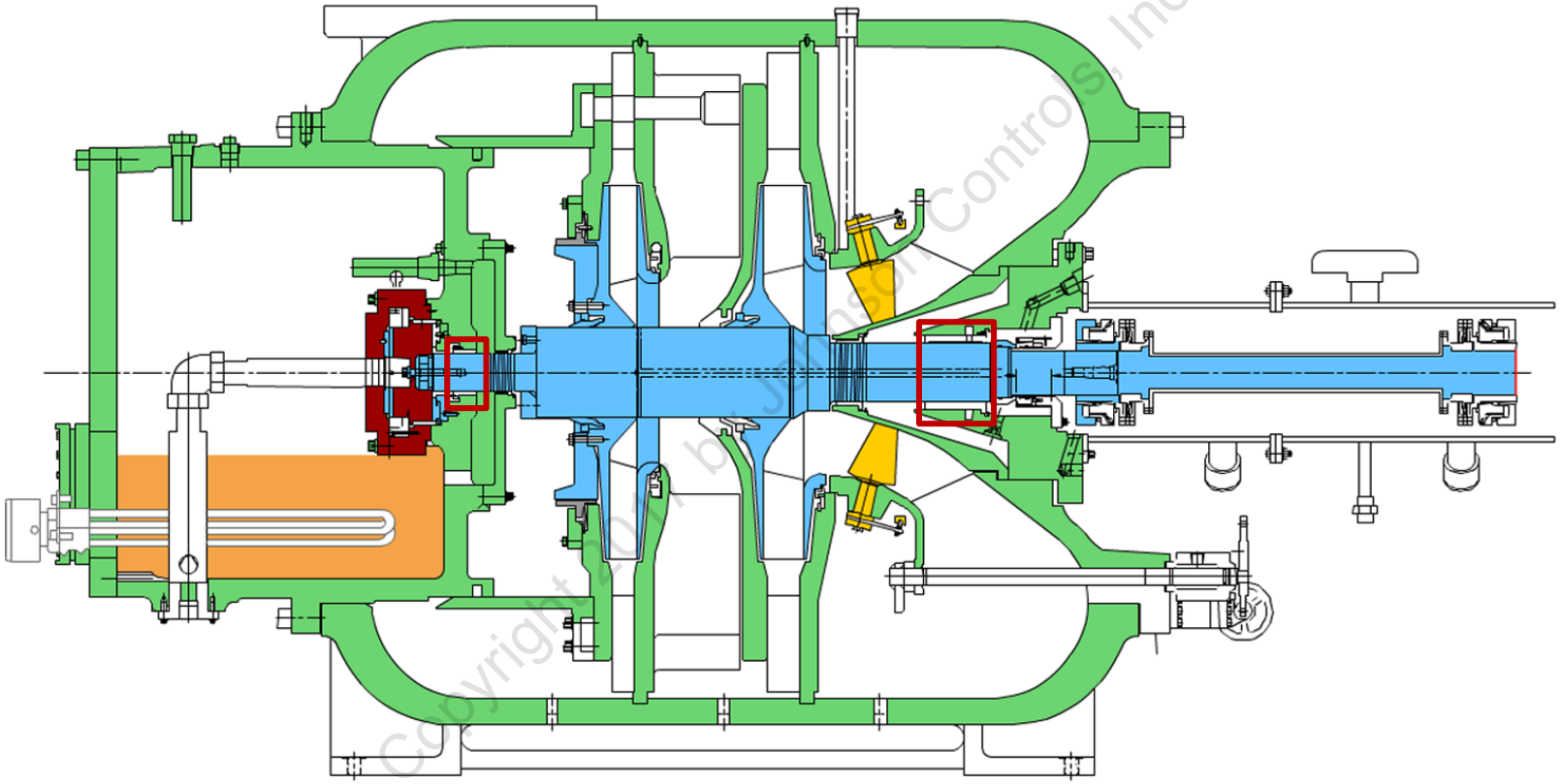

Copyright 2007 by Johnson Controls, Inc

Journal Bearings (Cont'd.)

Purpose: To maintain the lift of the shaft and support the radial loads.

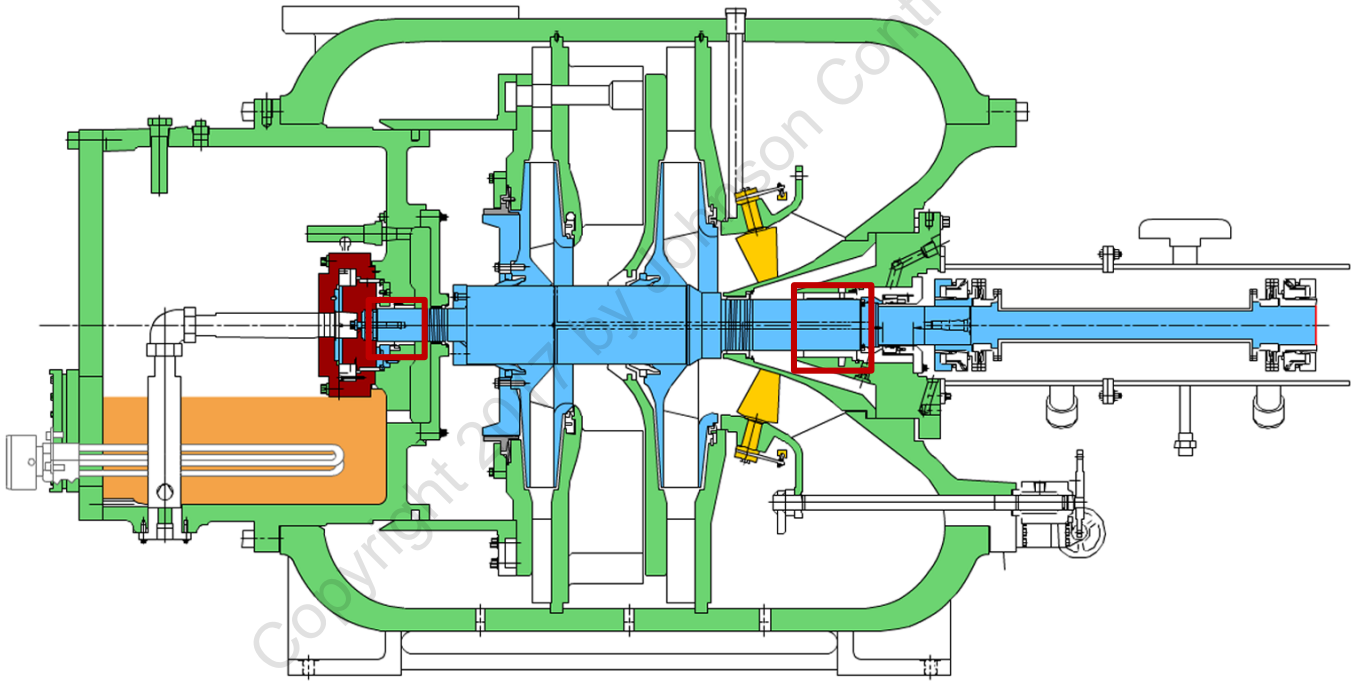

Copyright 2017 by Johnson Controls, Inc

Journal Bearings (Cont'd.)

Purpose: To maintain the lift of the shaft and support the radial loads.

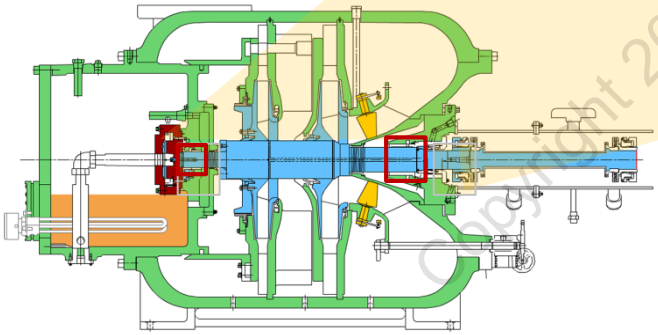



Copyright 2017 by Johnson Controls, Inc

Journal Bearings (Cont'd.)

Structure

- Sleeve bearing manufactured using an aluminum alloy

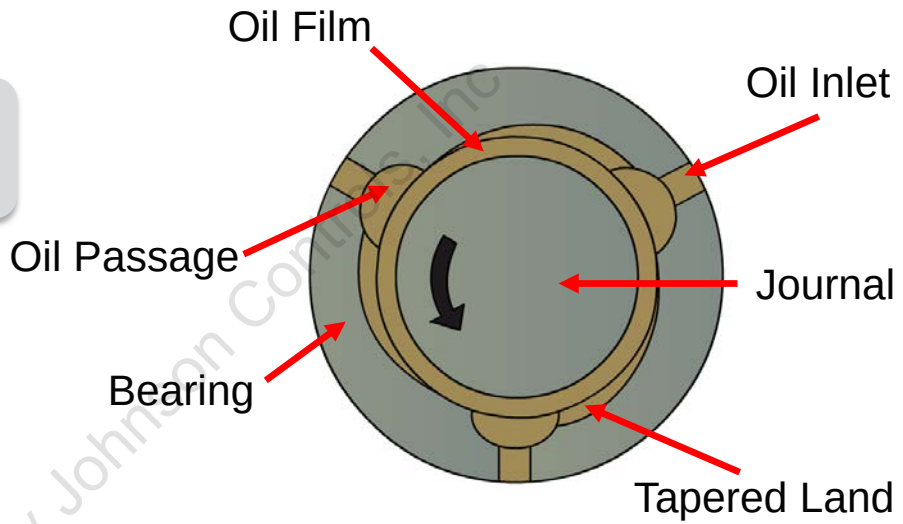

Copyright 2017 by Johnson Controls, Inc.

Features

- Also called hydro-dynamic or fluid film journal bearing
- Goes only one way

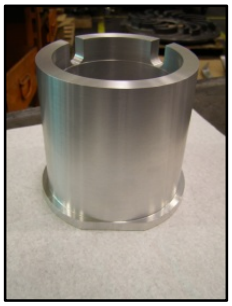

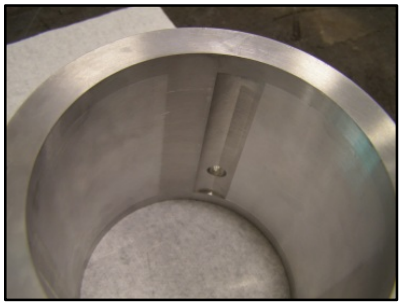

Journal Bearings (Cont'd.)

Taper Land

- Bearing Inside Diameter machined
- Majority of bearing area is tapered to form three dams offset at 120°
- Pressure dam areas in the inboard and outboard ends hold oil within the bearing

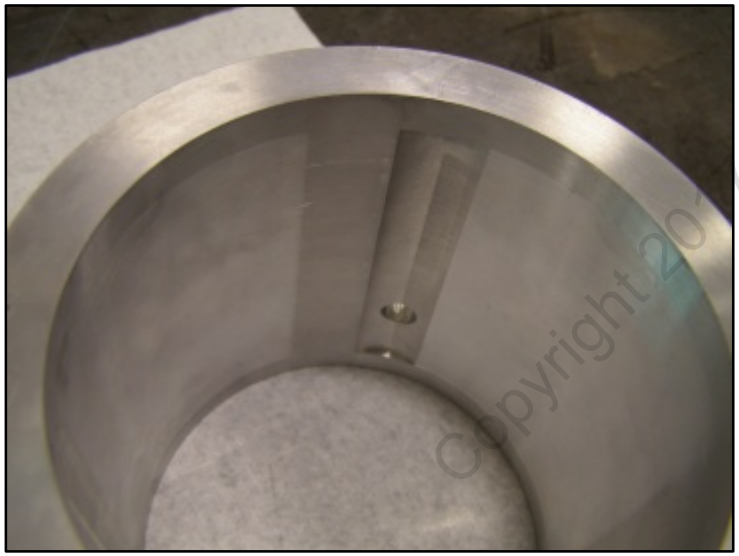

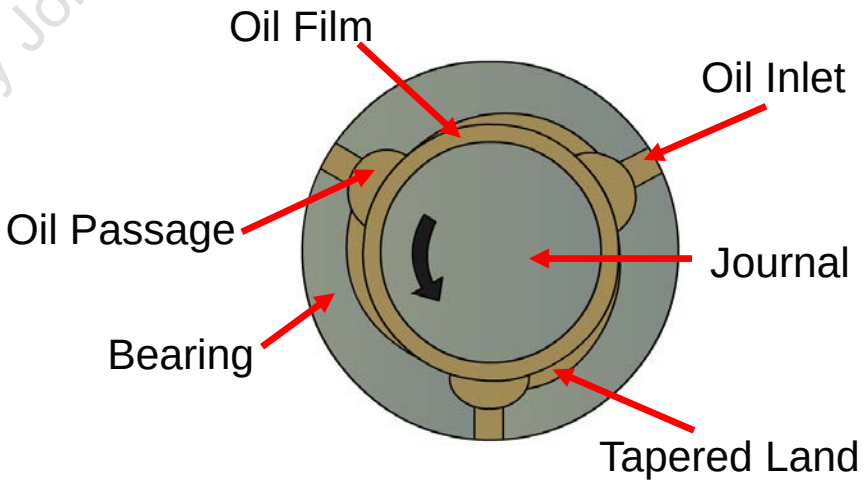

Copyright 2017 by Johnson Controls, Inc

Journal Bearings (Cont'd.)



Copyright 2017 by Johnson Controls, Inc

Diffusers

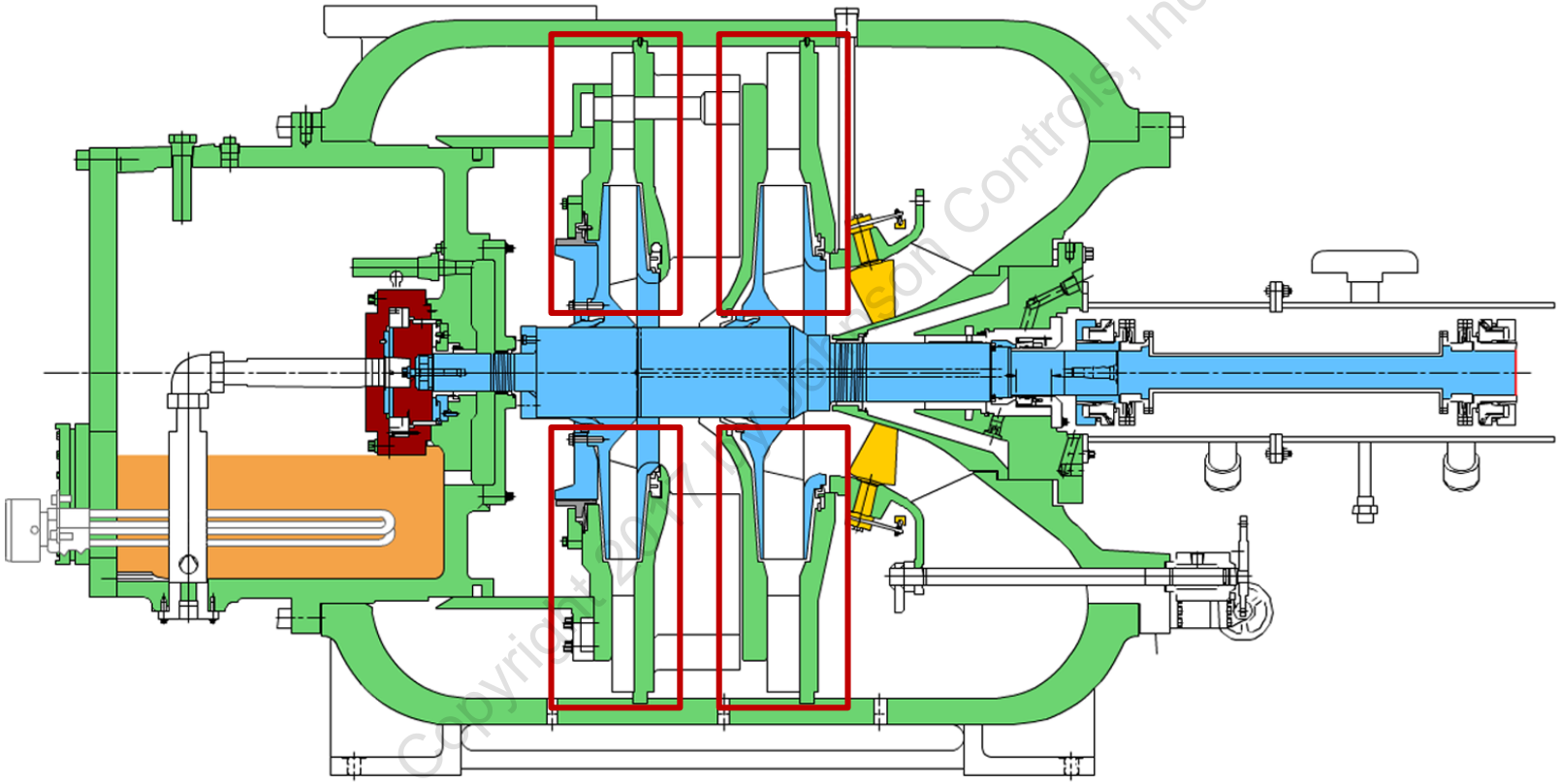

Diffusers (Cont'd.)

Purpose: To create an expansion space for the vapor exiting the tip of the impeller and to direct the gas into the next stage.

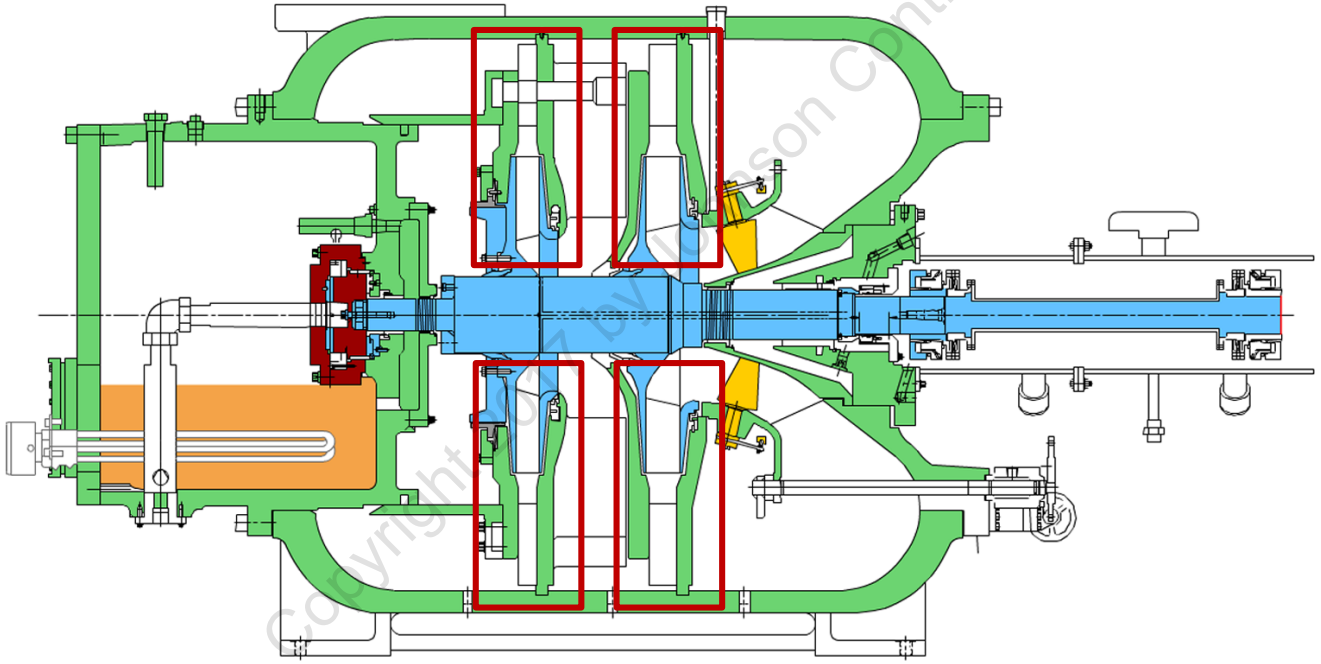

Copyright 2007 by Johnson Controls, Inc

Diffusers (Cont'd.)

Purpose: To create an expansion space for the vapor exiting the tip of the impeller and to direct the gas into the next stage.

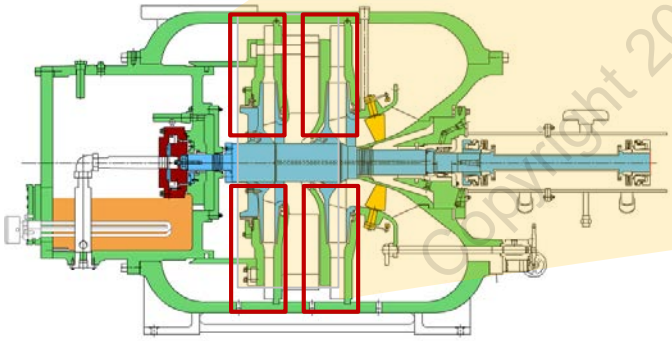



Copyright 2017 by Johnson Controls, Inc

Diffusers (Cont'd.)

Structure

- Vaned diffuser
- Consists of hub and shroud

Diffuser Plate
(diffuser hub)

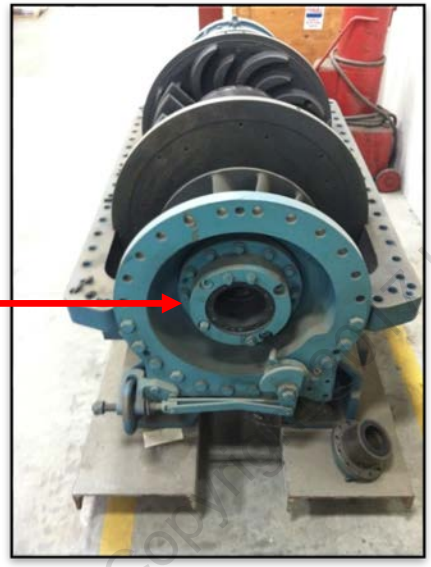

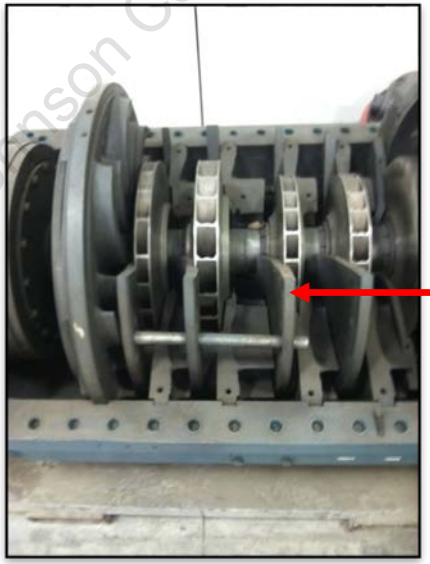

Nozzle Base
Plate
(diffuser shroud)

The first stage vane entrance diffuser disk and impeller labyrinth seal are solid pieces.

Copyright © by Johnson Controls, Inc

Diffusers—Energy Transformation

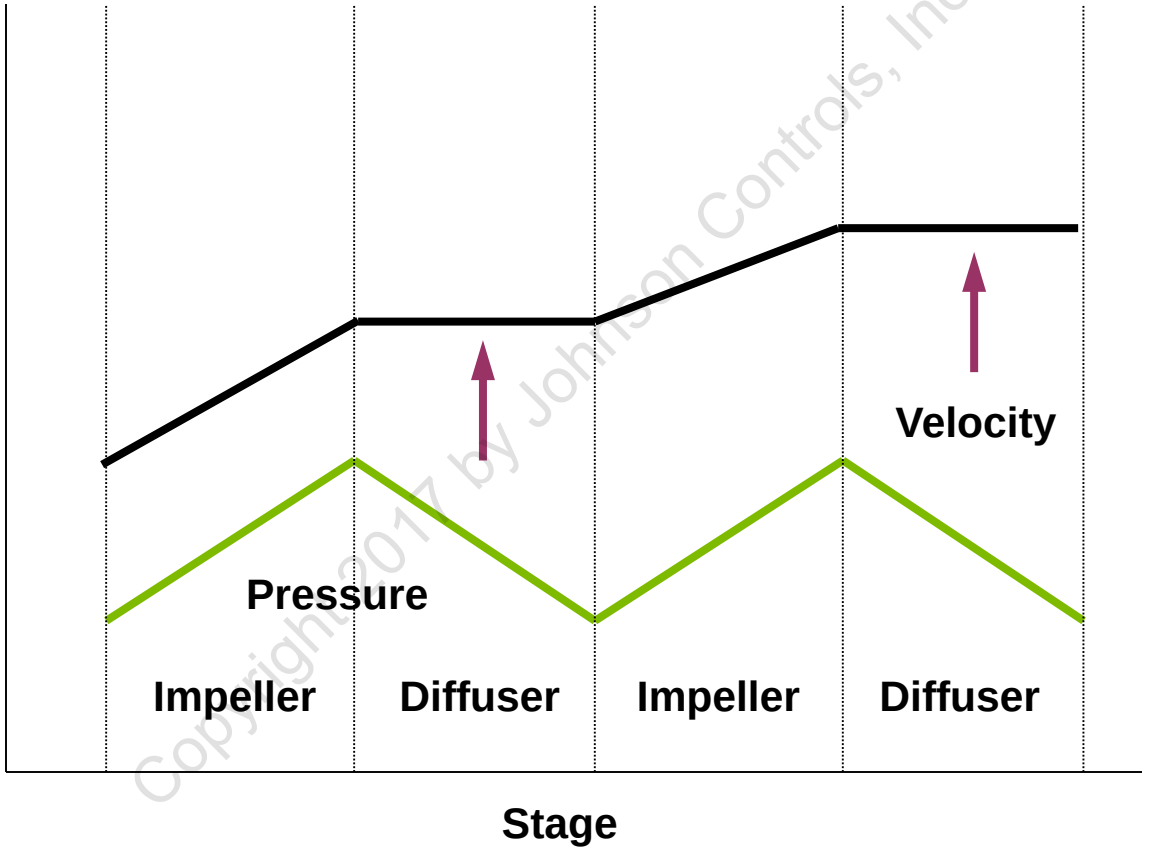

Copyright 2017 by Johnson Controls, Inc

Thrust Bearings

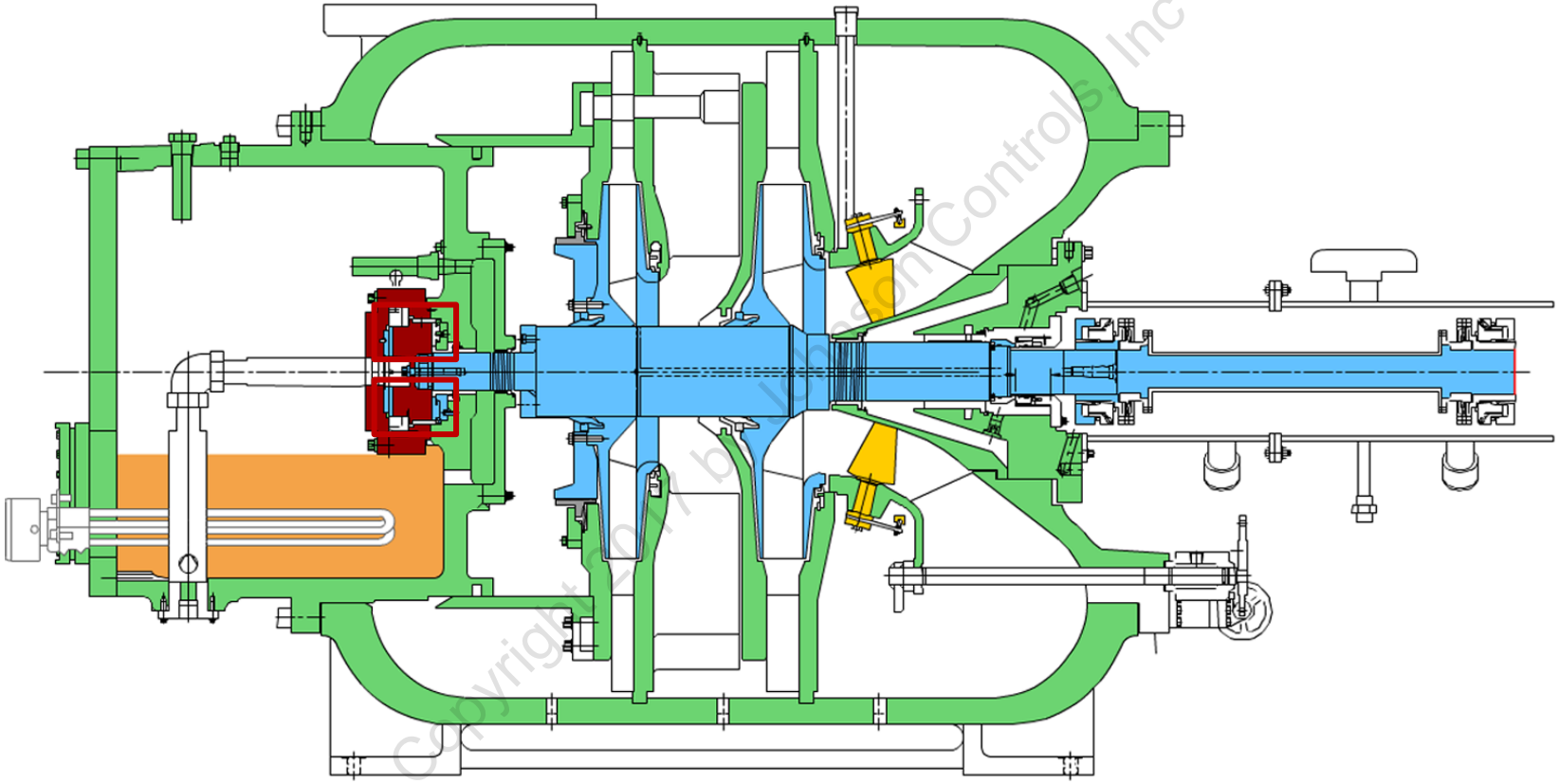

Thrust Bearings (Cont'd.)

Purpose: To contain the axial forces generated by the impeller.

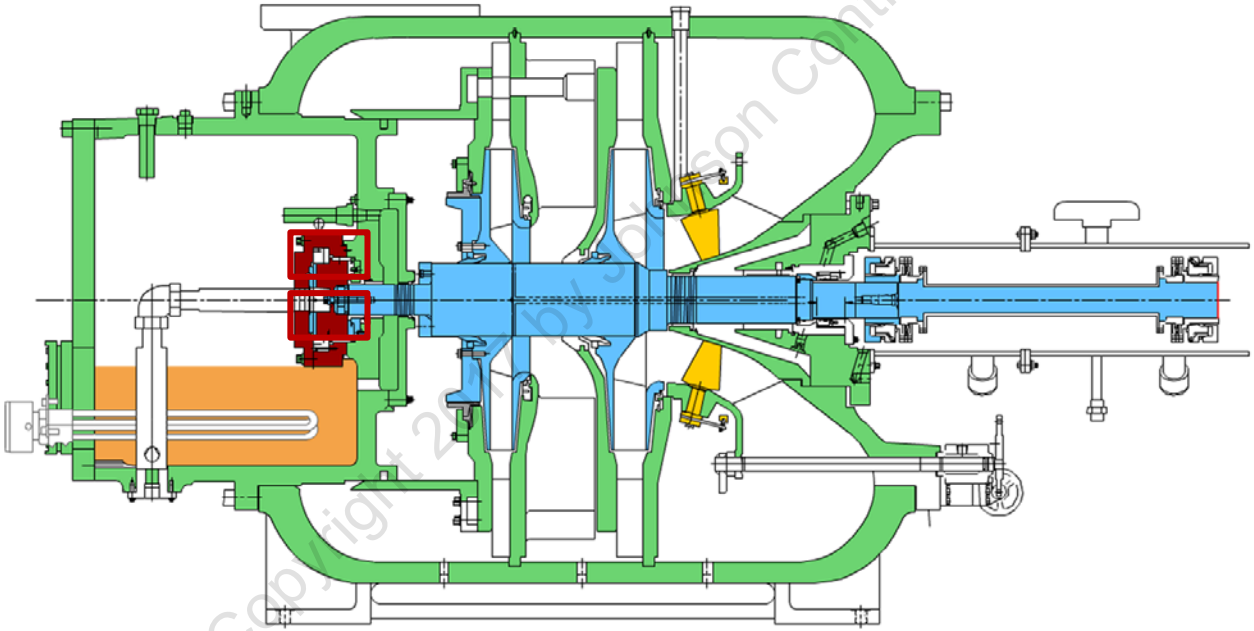

Copyright 2007 by Johnson Controls, Inc

Thrust Bearings (Cont'd.)

Purpose: To contain the axial forces generated by the impeller.

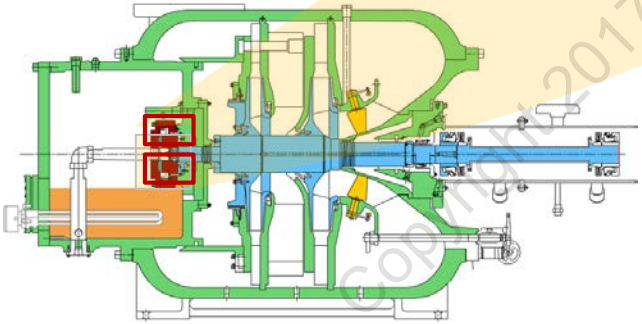

Forward Thrust





Reverse Thrust and Oil Pump

Copyright 2017 by Johnson Controls, Inc

Thrust Bearings (Cont'd.)

Features

- Made of babbit material
- Fixed wedge design or tapered-land wedge bearing design
- Has a pivotless design
- Used with the oil pump
- Available in two styles—separate unit or as a single unit (incorporated with the discharge end shaft bearing)

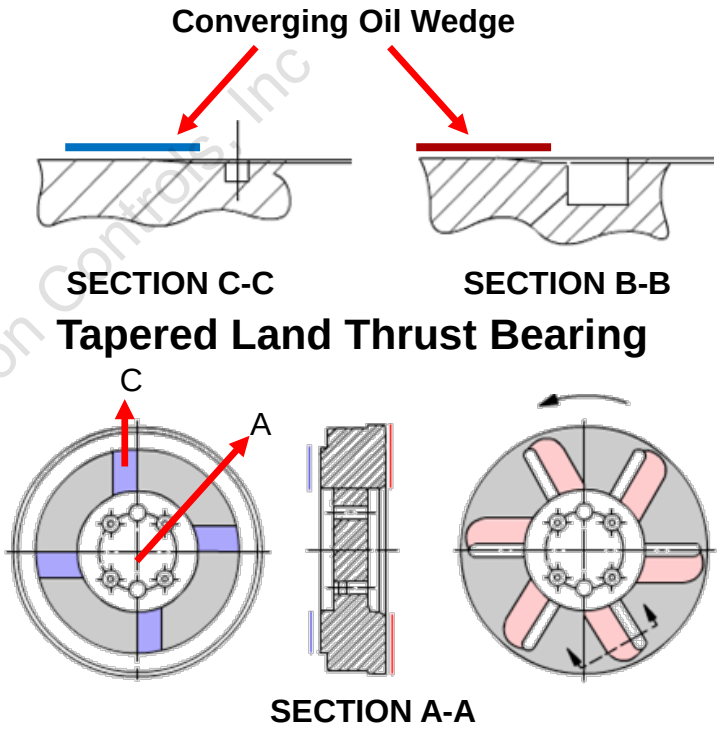

Copyright 2017 by Johnson Controls, Inc

What is the advantage of the tapered-land wedge bearing design?

The wedge assures no metal-to-metal contact eliminating the need for periodic replacements.

Separate Thrust Bearing Styles

- Separate thrust bearings come in two styles —hydrostatic flat aluminum and tilting pad with babbit metal shoes
- Both styles of aluminum thrust bearings are used with an oil pump that has pockets on the forward thrust face
- Pockets act as oil pumps, circulating oil across the thrust face and out through small holes
- Tilting pad thrust bearing is used with an oil pump that has a flat forward thrust face and is not designed to pump oil
- Aluminum thrust bearing/ tilting pad thrust bearing, oil pump, and jet pump assembly must be built as an assembly
- Reverse thrust bearing — a flat aluminum disk, or tilting pad type bearing — don't contact the oil pump reverse face during normal operation and acts to limit rotor end float





Copyright 2017 by Johnson Controls Inc

Thrust Bearing

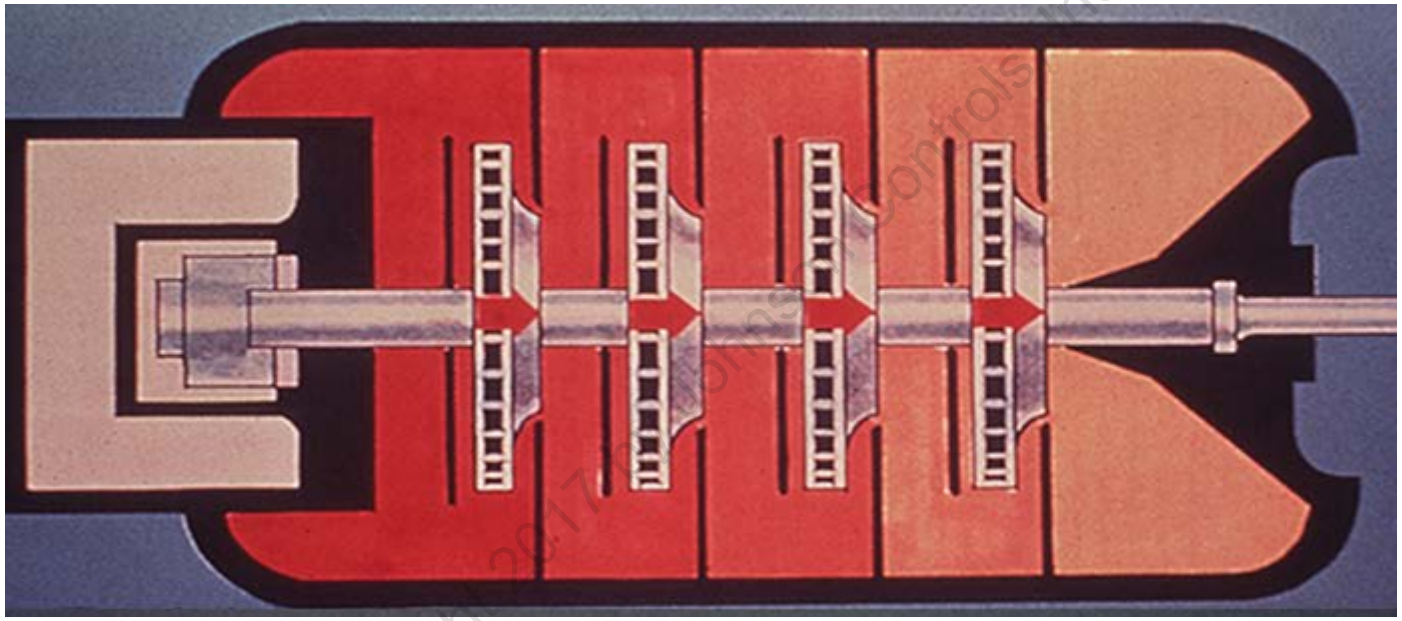

Each impeller pulls towards the suction

Total Thrust →

Copyright 2017 Johnson Controls Inc

Balance Piston

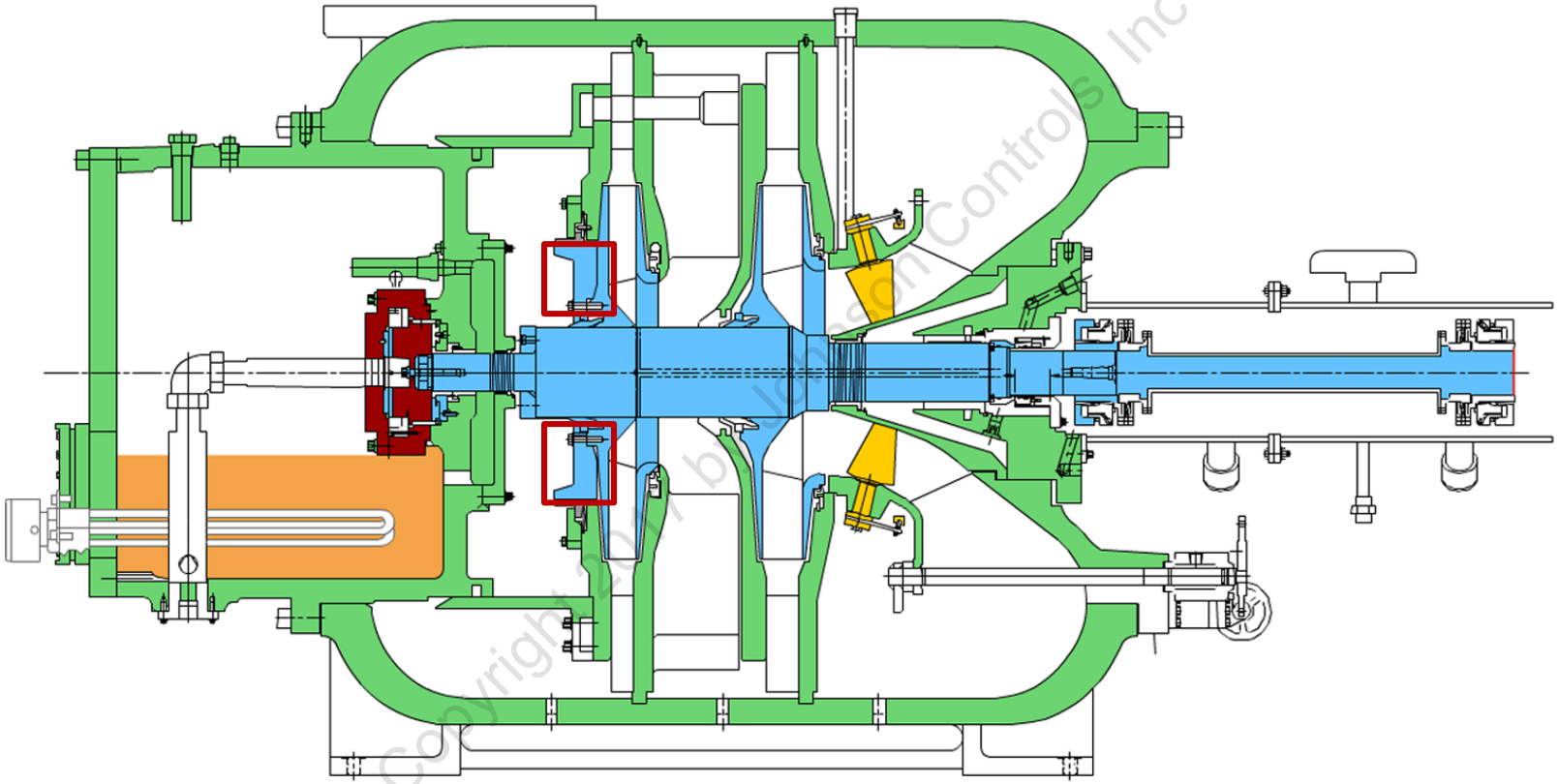

Balance Piston (Cont'd.)

Purpose: To oppose the thrust imposed by the impellers.

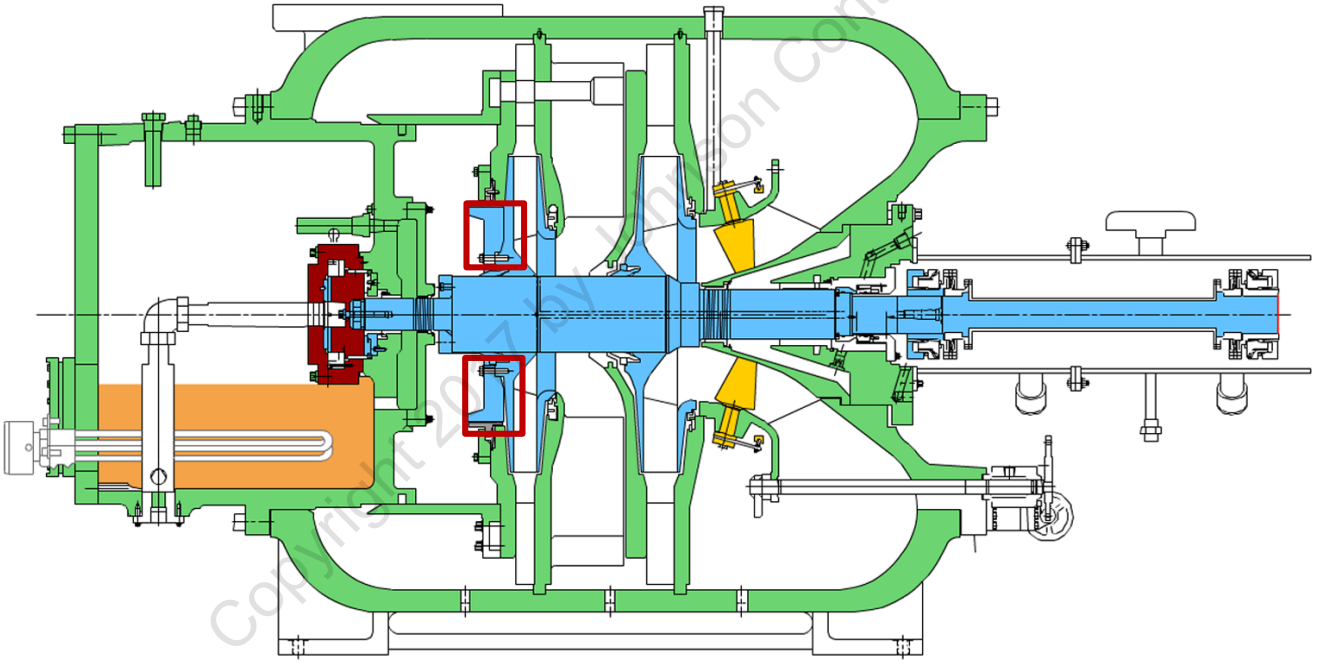

Copyright 2017 by Johnson Controls, Inc

Balance Piston (Cont'd.)

Purpose: To oppose the thrust imposed by the impellers.

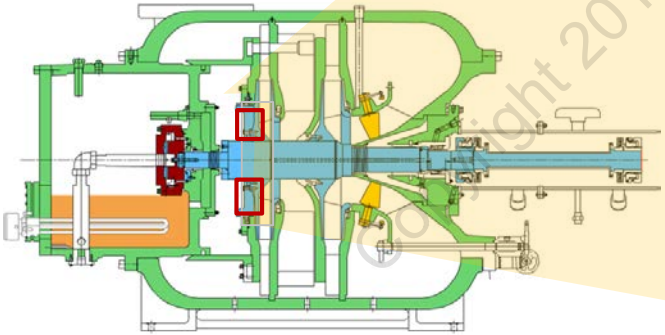

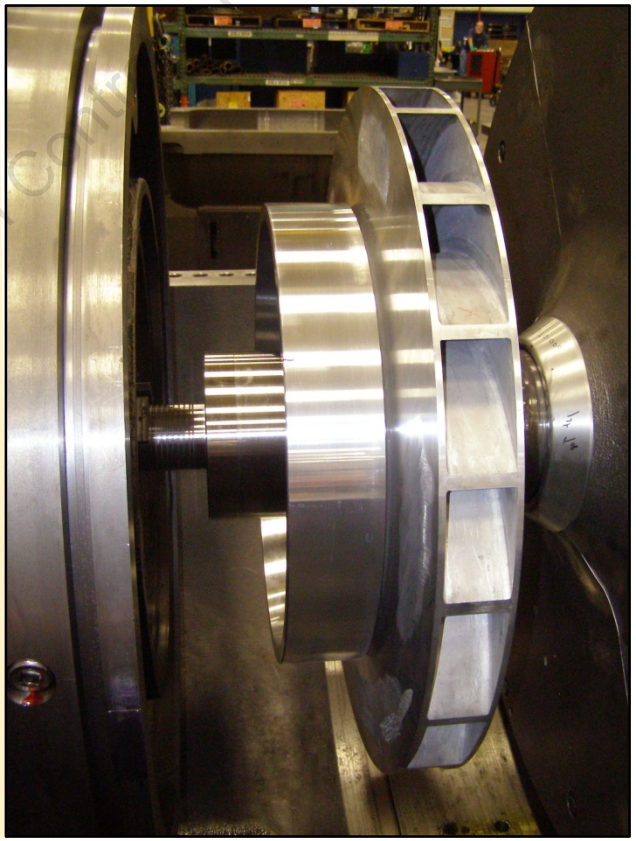

©Copyright 2017 by Johnson Controls Inc

Balance Piston (Cont'd.)

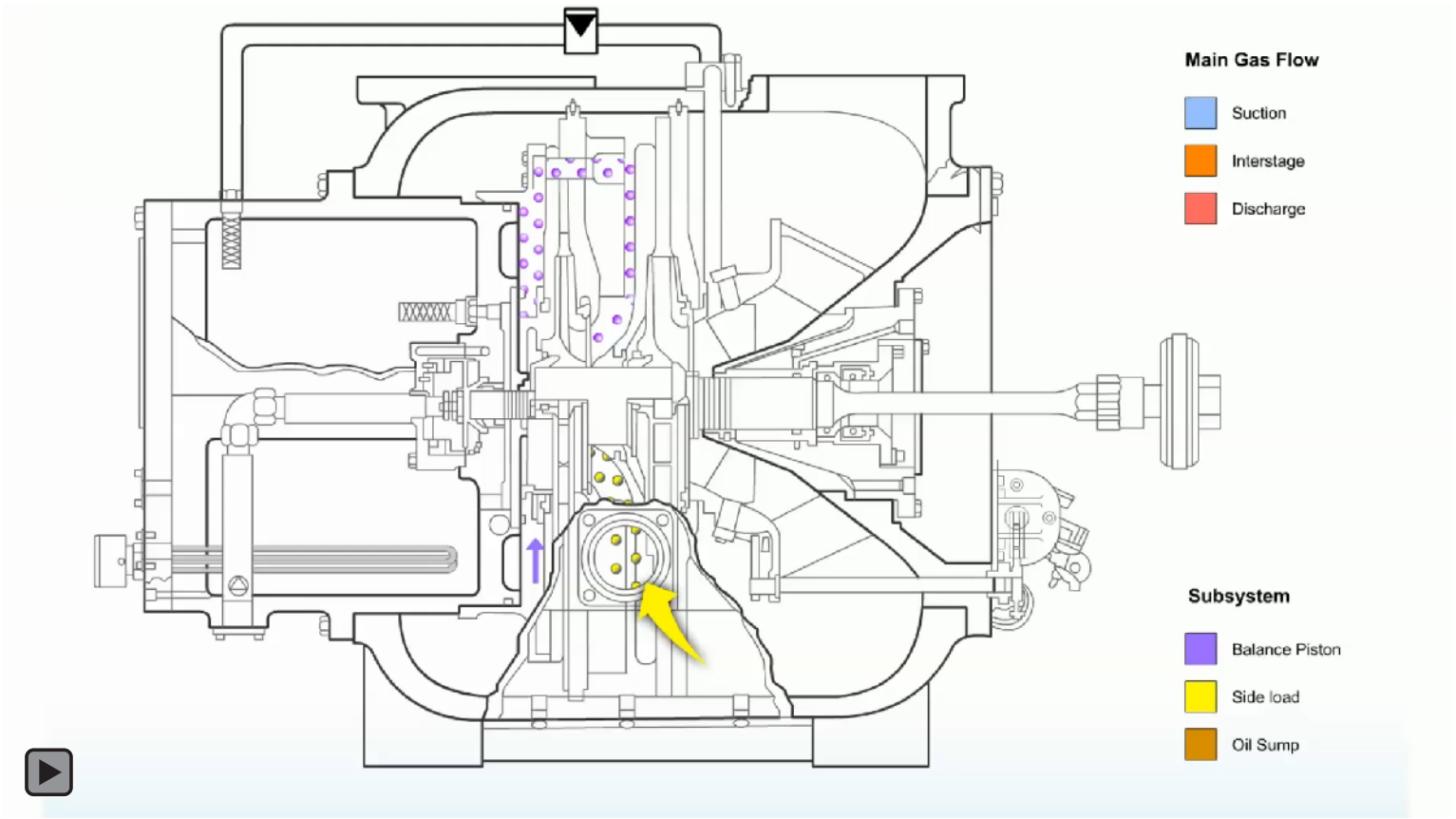

Our Policy prohibits printing. Save GREEN.

Thrust Load

Offset thrust load with a balance piston

Reverse thrust load

Resultant load reduced

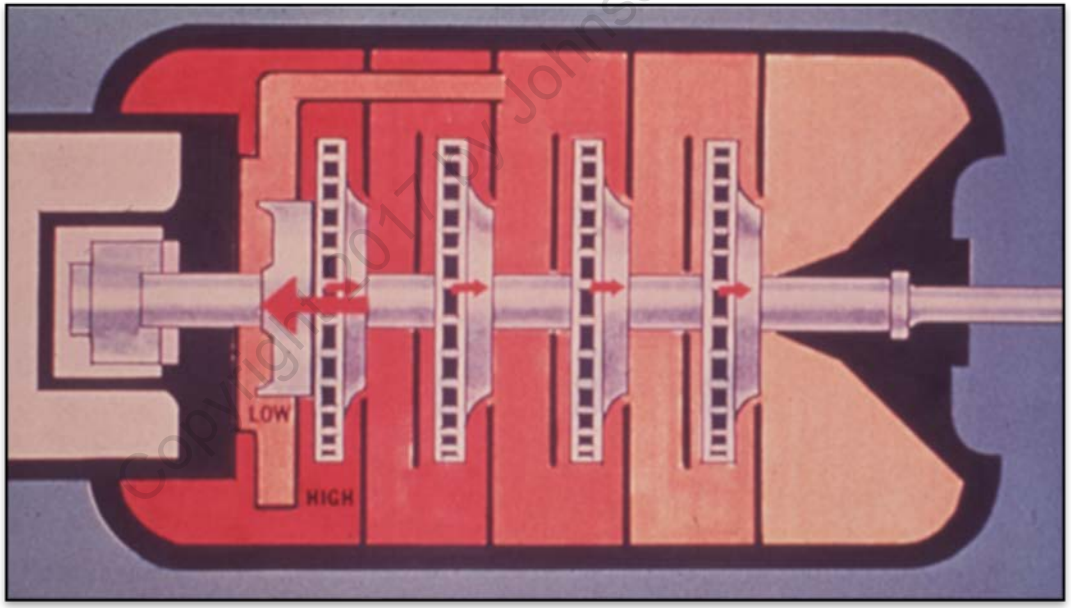

Copyright 2017 by Johnson Controls, Inc

Balance Piston—Features

Features

- Machined and fitted to the backside of the impeller
- Fitted with a balance piston seal

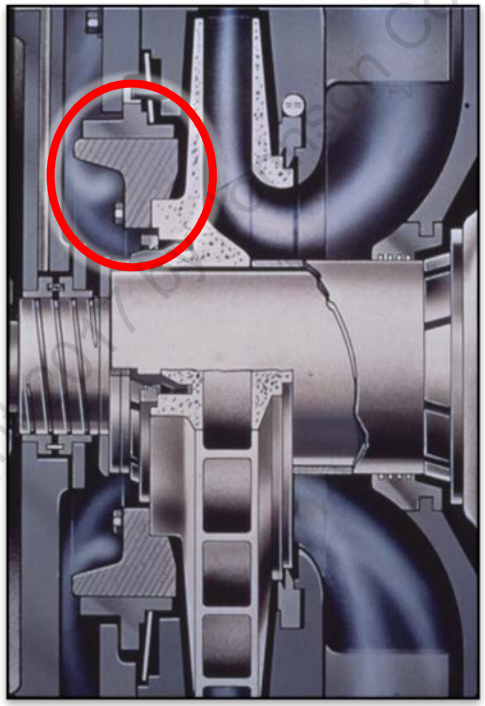

Copyright 2007 by Johnson Controls, Inc

Balance Piston Seal

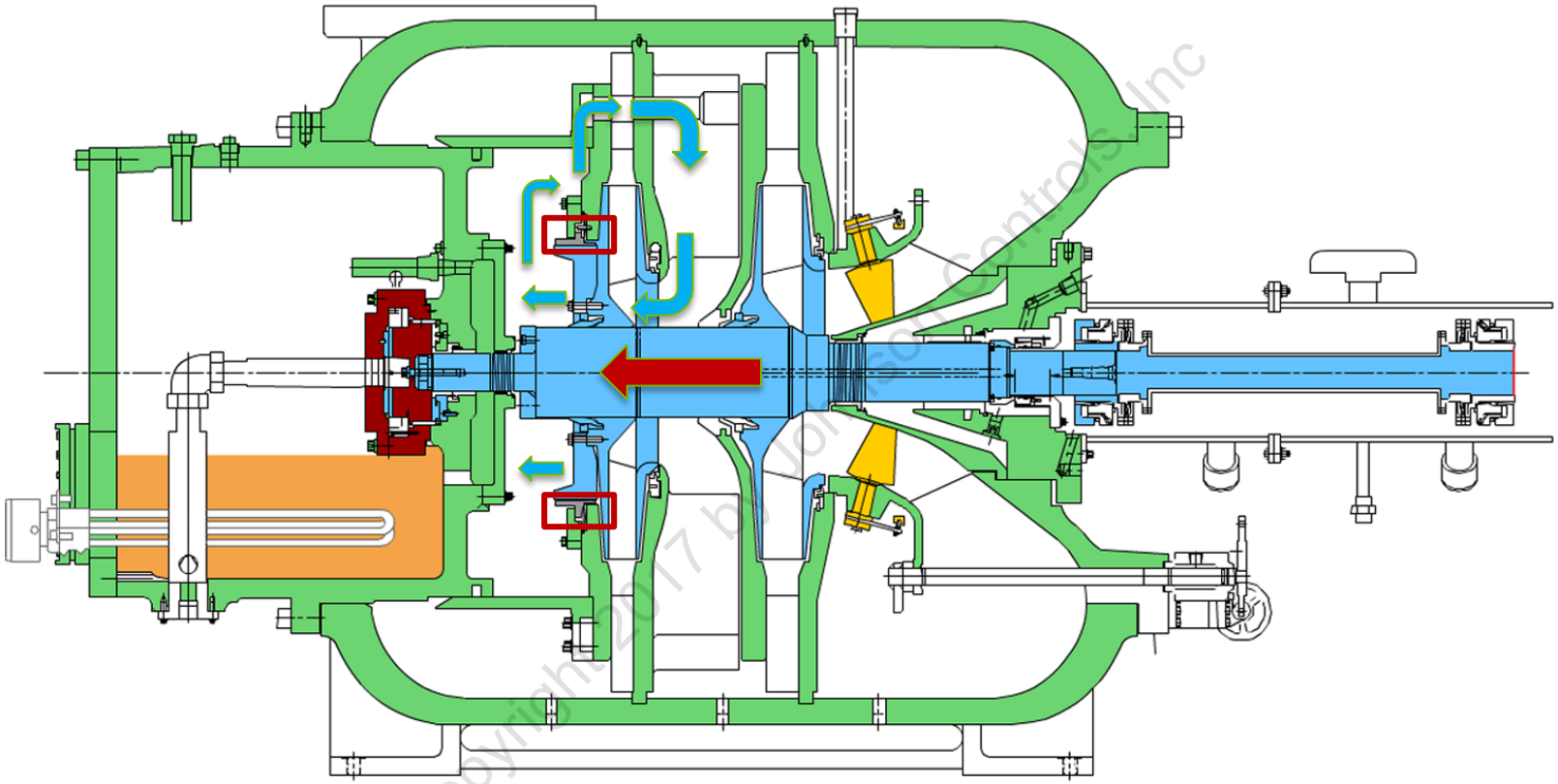

The balance piston acts like a pneumatic piston in its action.

Balance Piston Seal (Cont'd.)

Purpose: To seal the lower pressure side of the piston from the second stage pressure at the root of the impeller.

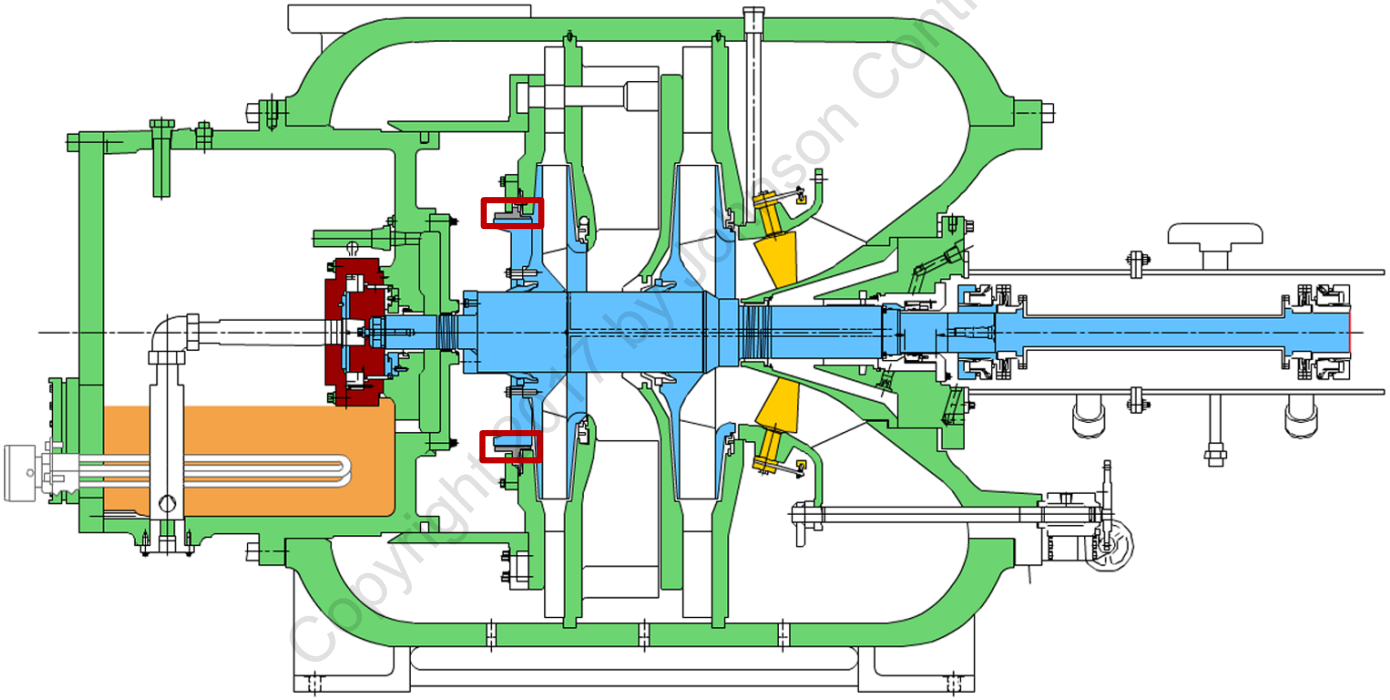

Copyright 2017 by Johnson Controls, Inc

Balance Piston Seal (Cont'd.)

Purpose: To seal the lower pressure side of the piston from the second stage pressure at the root of the impeller.

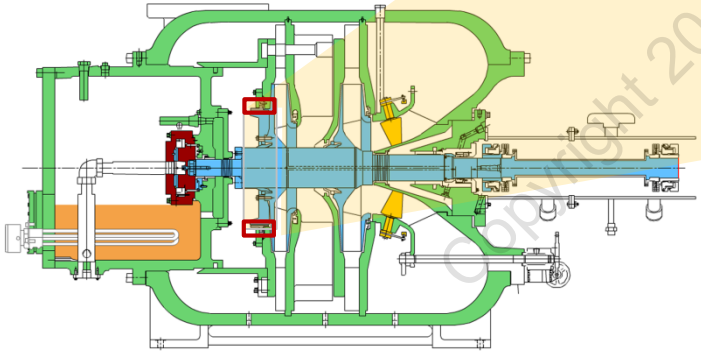

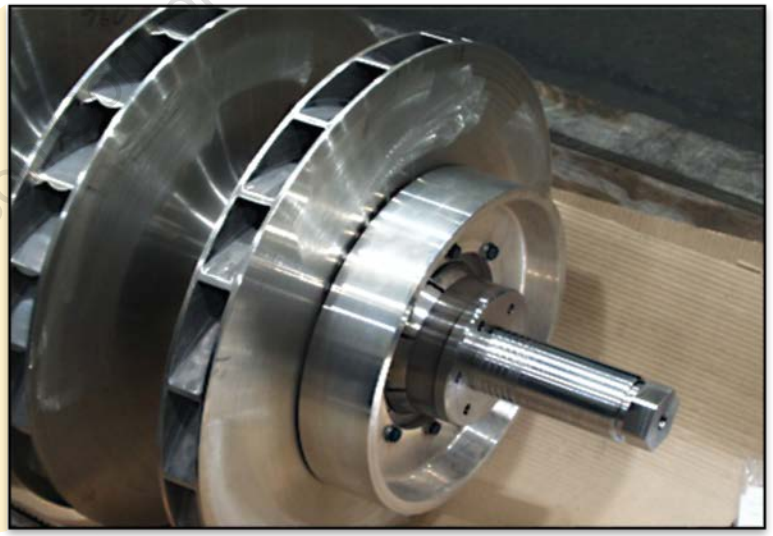

Copyright 2017 by Johnson Controls, Inc

Any Questions?



Copyright 2017 by Johnson Controls, Inc

Key Takeaways

In this topic, you learned that:

- M Compressors are designed to compress various refrigerants and are used in open multi-stage (OM) chillers
- Each compressor is identified by nomenclature
- The refrigerant vapor goes through changes in pressure and velocity as it passes through the compressor
- Each M Compressor component has a specialized structure and function
- M Compressors use the YorkFlex coupling, which is now replaced by the RiverHawk coupling
- The PRVs are lubricated when originally assembled
- The width of the impeller decreases when moving from suction to discharge
- M Compressor has a vaned diffuser



Copyright 2017 by Johnson Controls, Inc

M Compressor_Lubrication System

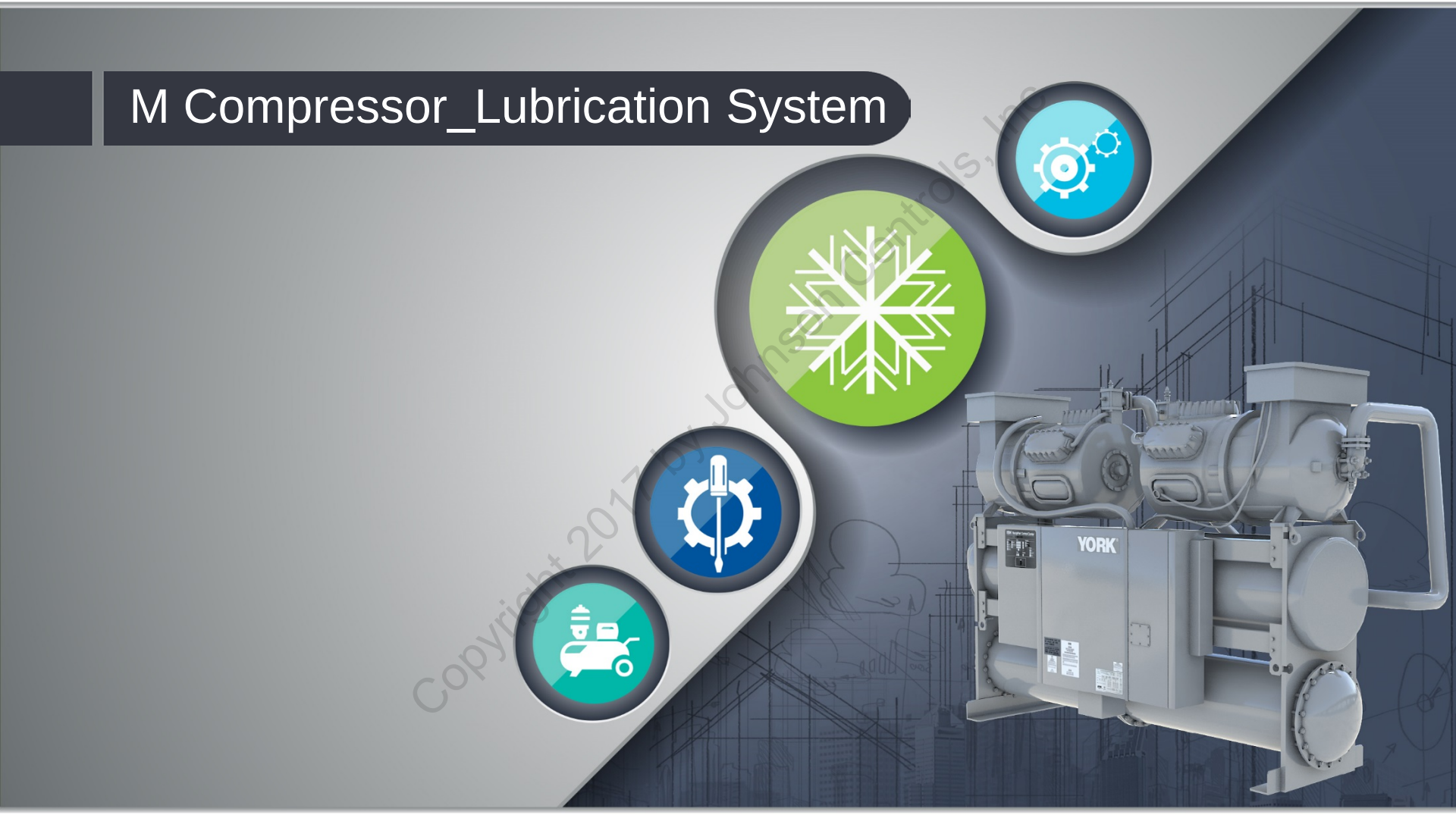

Copyright 2017 by Johnson Controls, Inc.

Topic Objectives

M Compressor Basics

1. Introduction
2. Components
3. Lubrication System
4. Operation and Controls

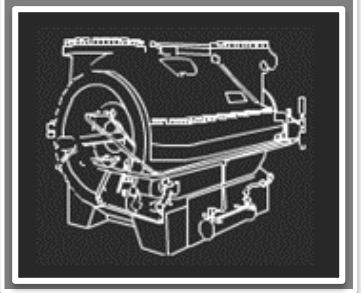

At the end of this topic, you will be able to:

- Describe the function and working of the components in the M Compressor lubrication system
- Explain the flow of oil in M Compressor

Copyright 2017 by Johnson Controls, Inc

Functions of the Lubrication System

What is the function of the lubrication system in the M Compressor?

- Provides lubrication, cooling, and lift for the bearings
- Protects the machine from friction between the parts
- Cools the machine and takes the heat away from the bearings

Copyright 2017 by Johnson Controls, Inc

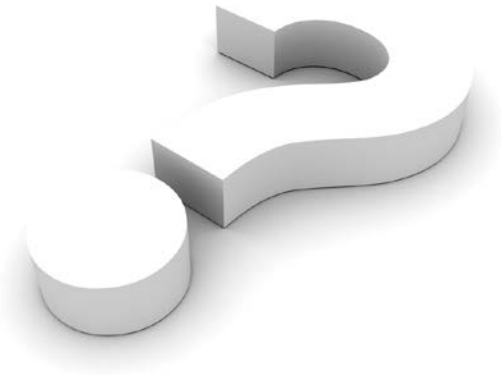

Discussion: Characteristics of Oil

For the lubrication system to function, what should be the quality of the oil flowing through the system?

- Clean
- Warm, which can be cooled and returned to the oil sump

Copyright 2017 by Johnson Controls, Inc



Internal Parts of the Lubrication System

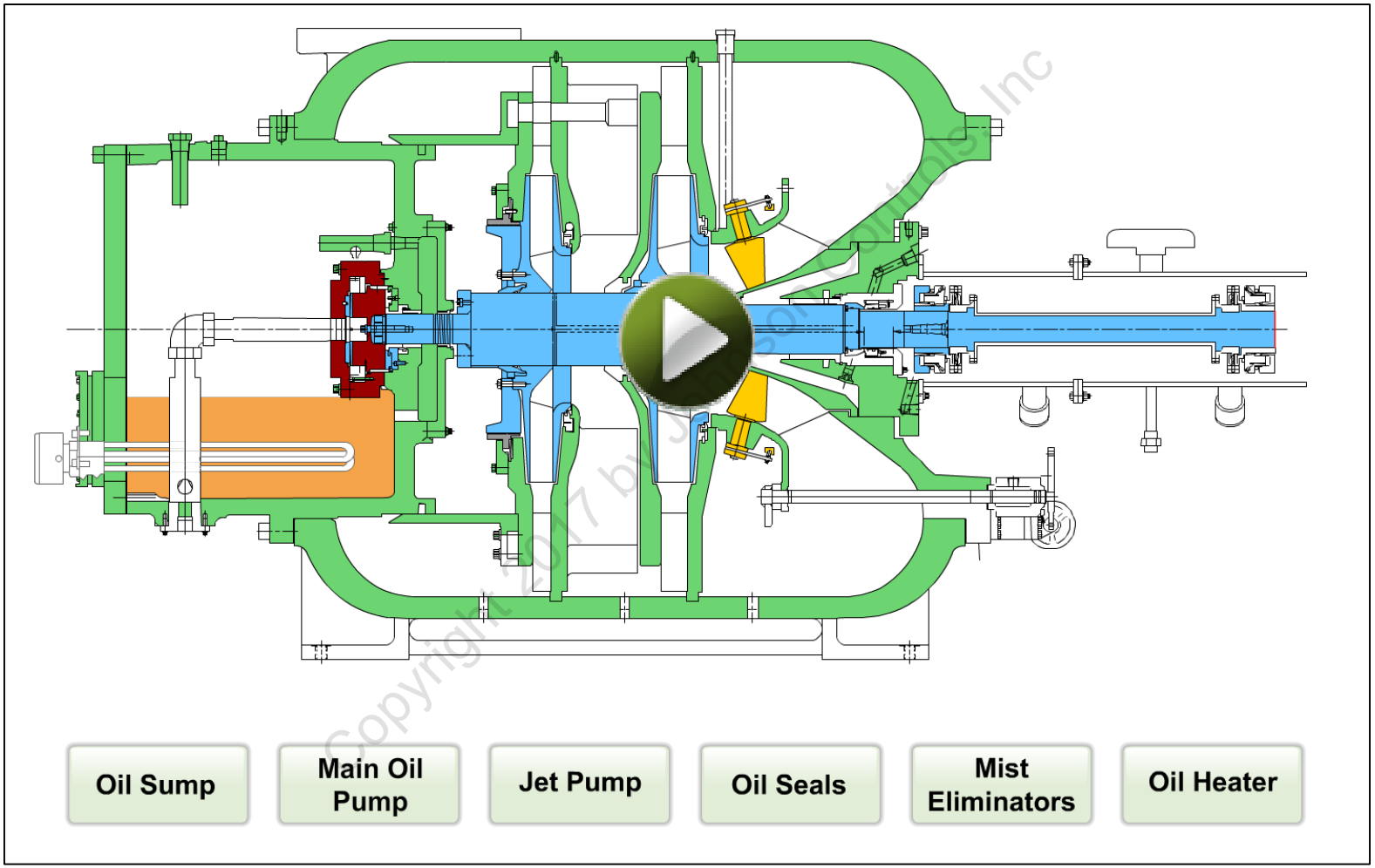

Copyright 2017 by Johnson Controls Inc

External Parts of the Lubrication System

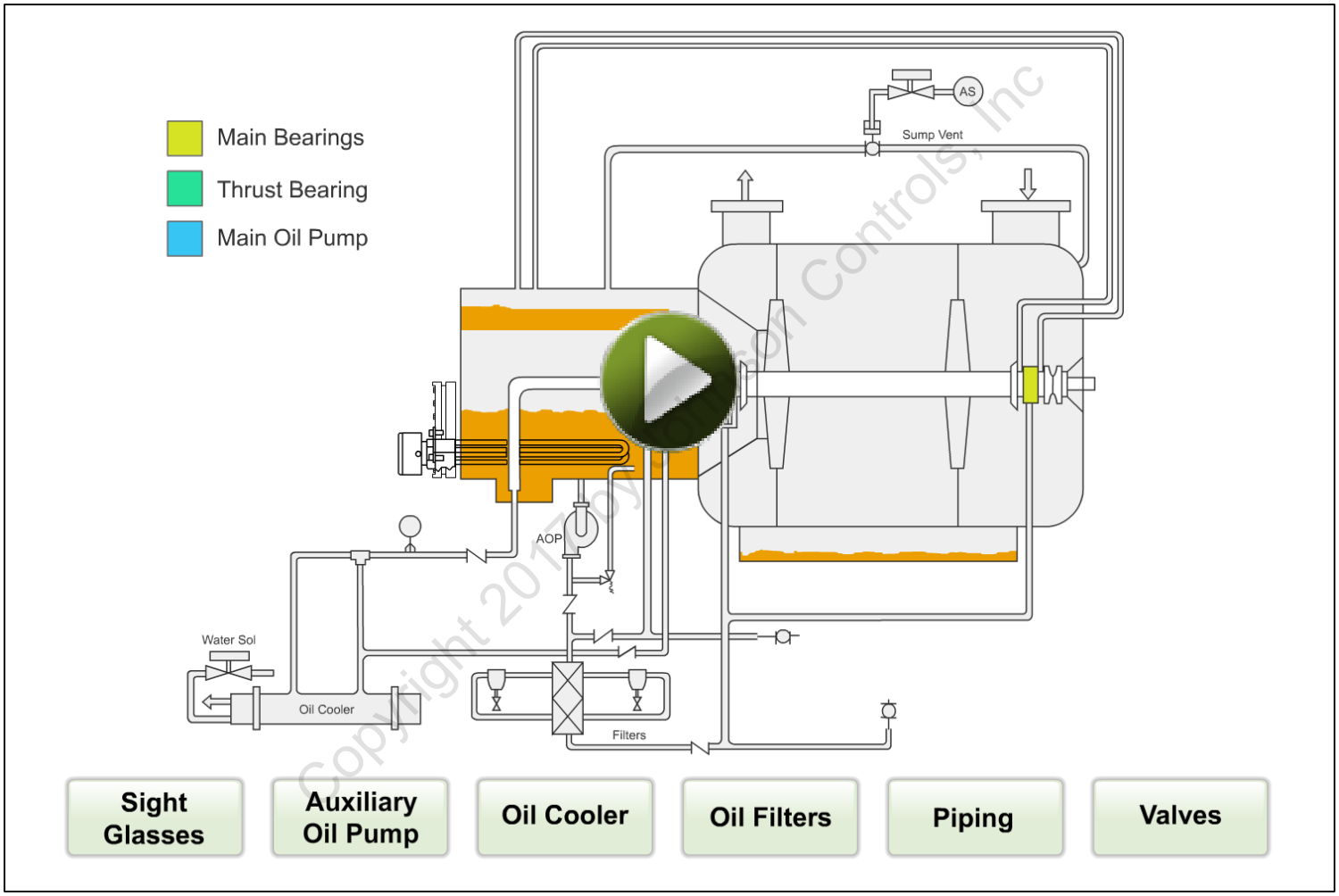

Copyright 2017 Johnson Controls, Inc

Oil Sump

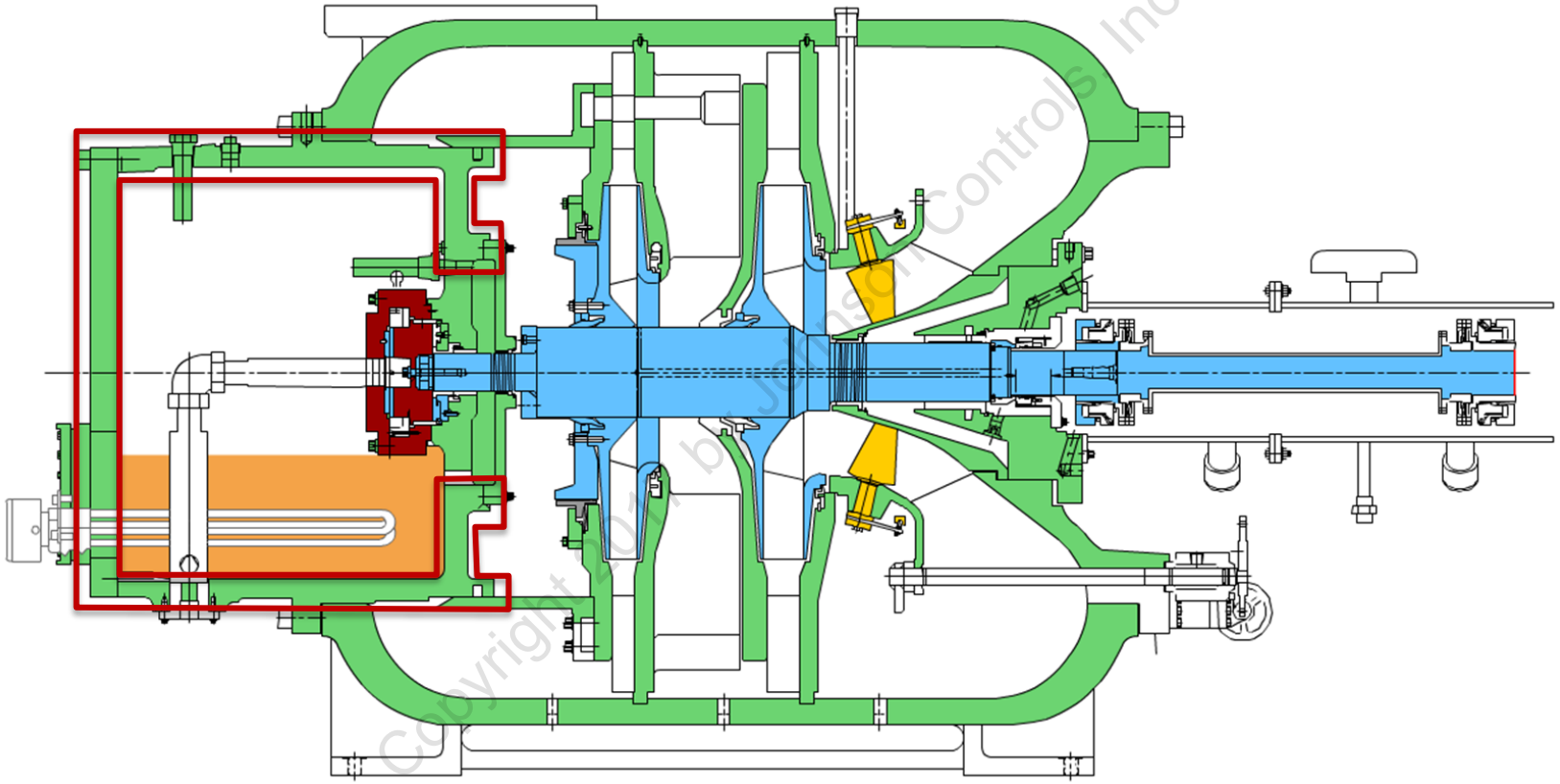

Oil Sump (Cont'd.)

Function: Main oil reservoir external to the compressor

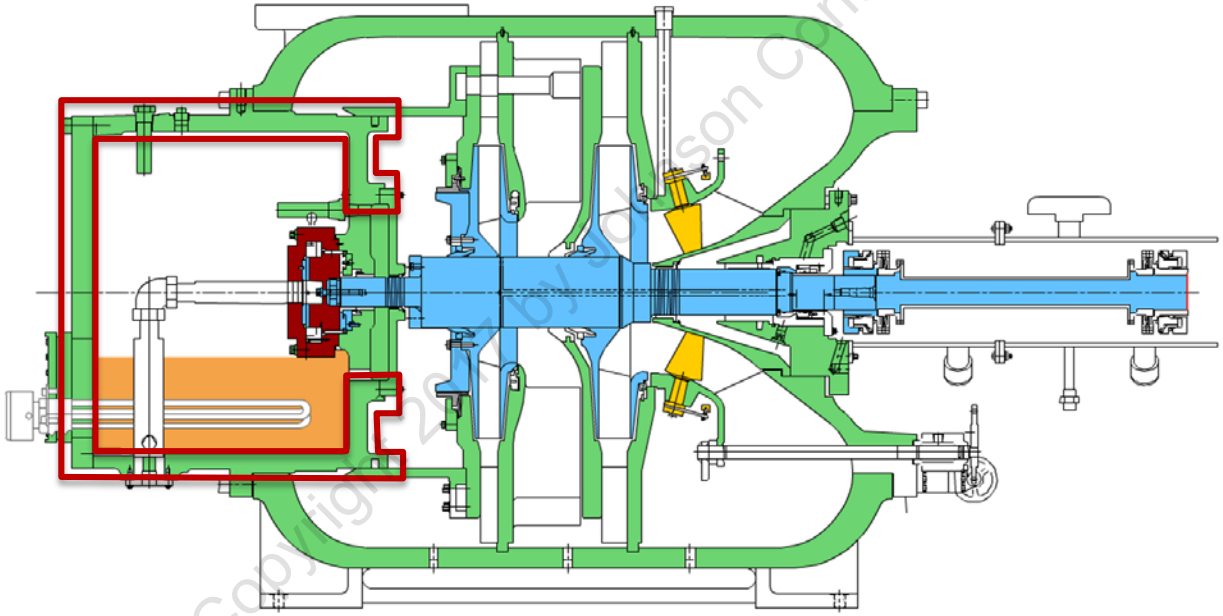

Copyright 2011 by Johnson Controls, Inc

Our Policy prohibits printing. Save GREEN.

Oil Sump (Cont'd.)

Function: Main oil reservoir external to the compressor

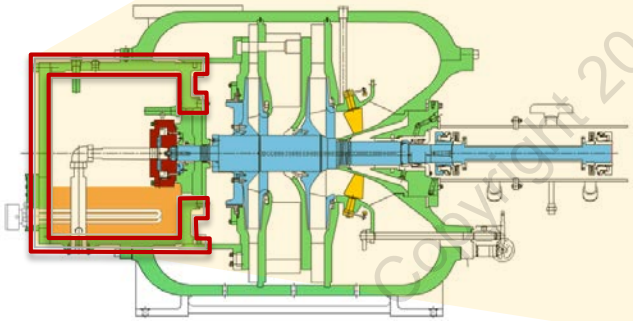

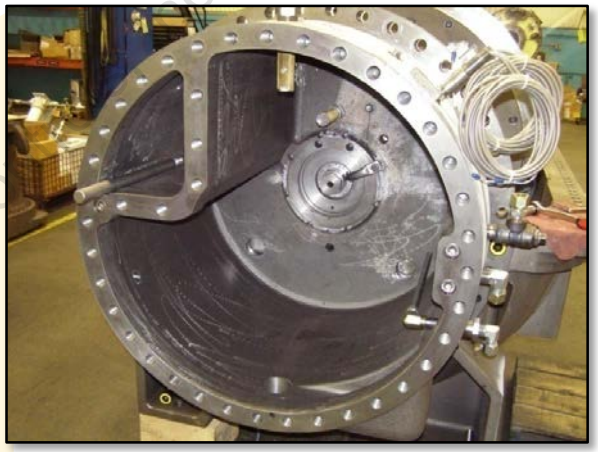

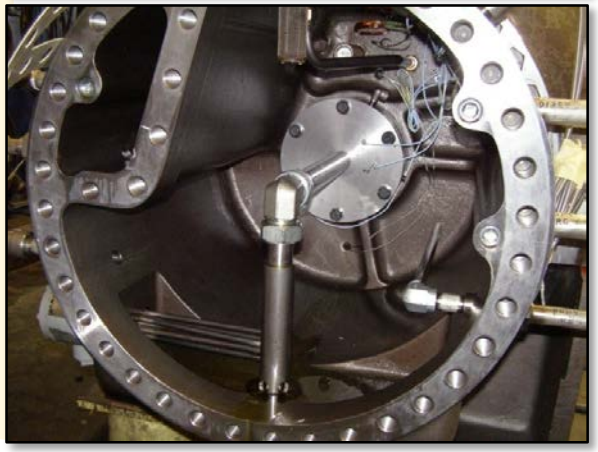

Copyright 2017 by Johnson Controls Inc

Oil Sump (Cont'd.)

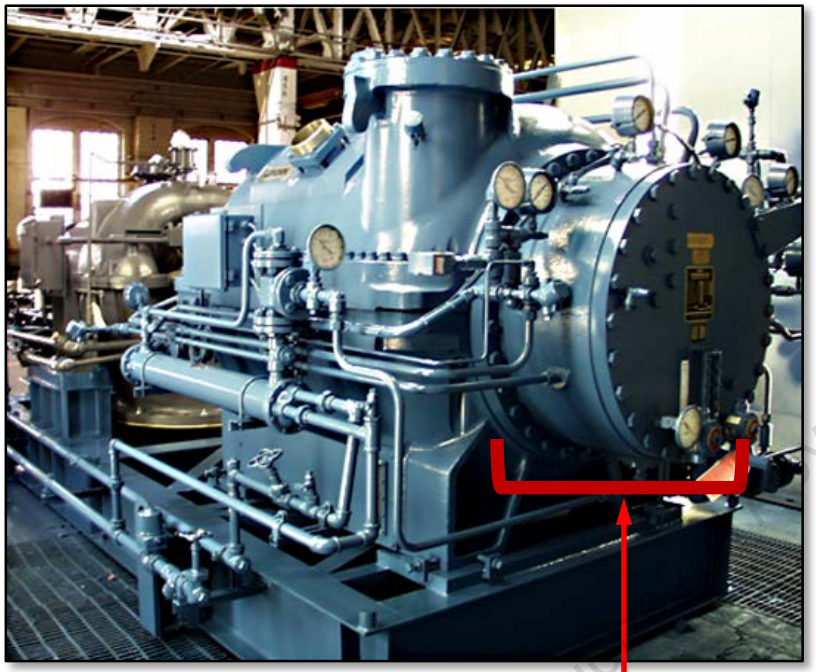

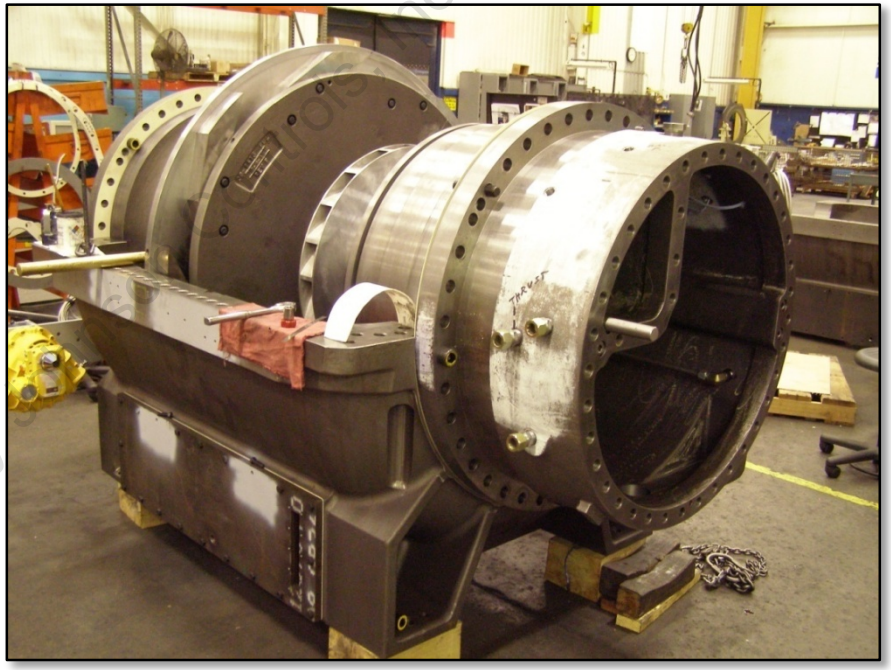

Copyright © Johnson Controls Inc

Auxiliary Oil Pump

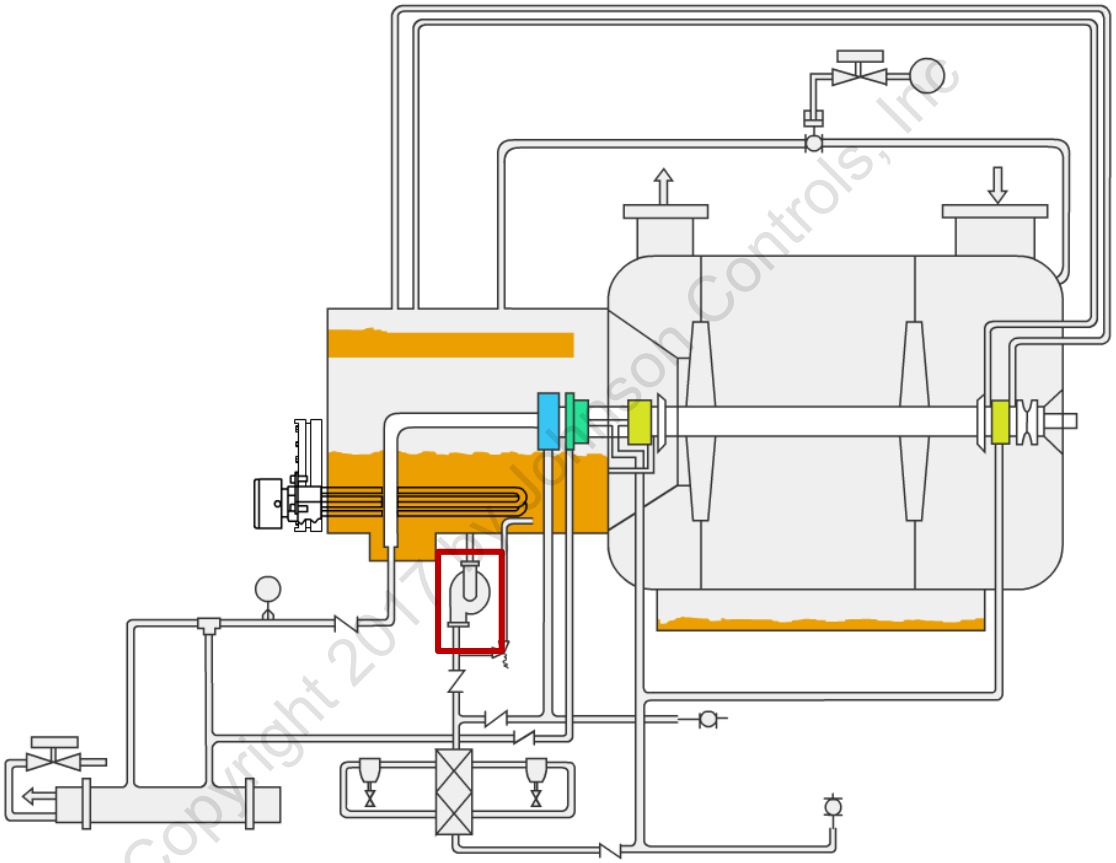

Why do you need an Auxiliary Oil Pump on the machine?

Auxiliary Oil Pump (Cont'd.)

Function: Assures pressure lubrication prior to the startup, during the normal shutdown, and at any time when the main oil pump does not maintain the required pressure

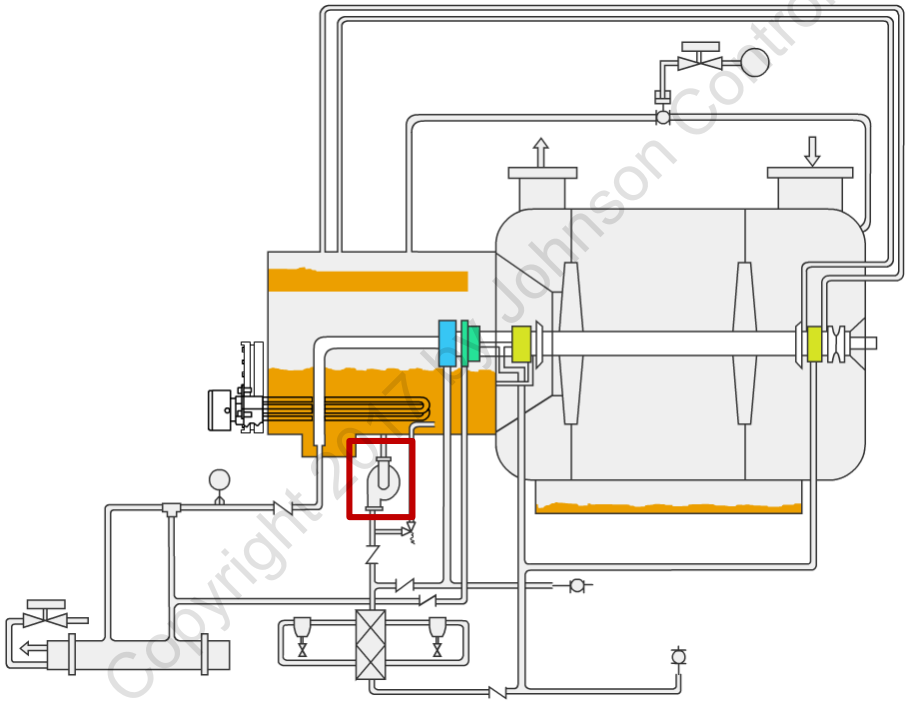

Copyright 2017 Johnson Controls, Inc.

Auxiliary Oil Pump (Cont'd.)

Function: Assures pressure lubrication prior to the startup, during the normal shutdown, and at any time when the main oil pump does not maintain the required pressure

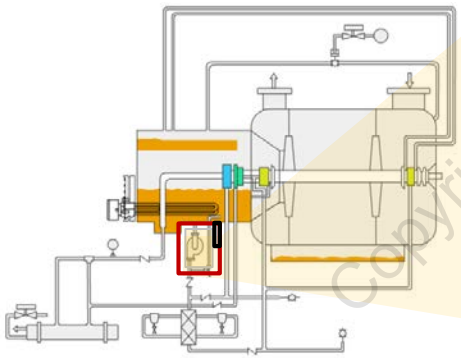





Copyright 2017 by Johnson Controls, Inc.

Auxiliary Oil Pump (Cont'd.)

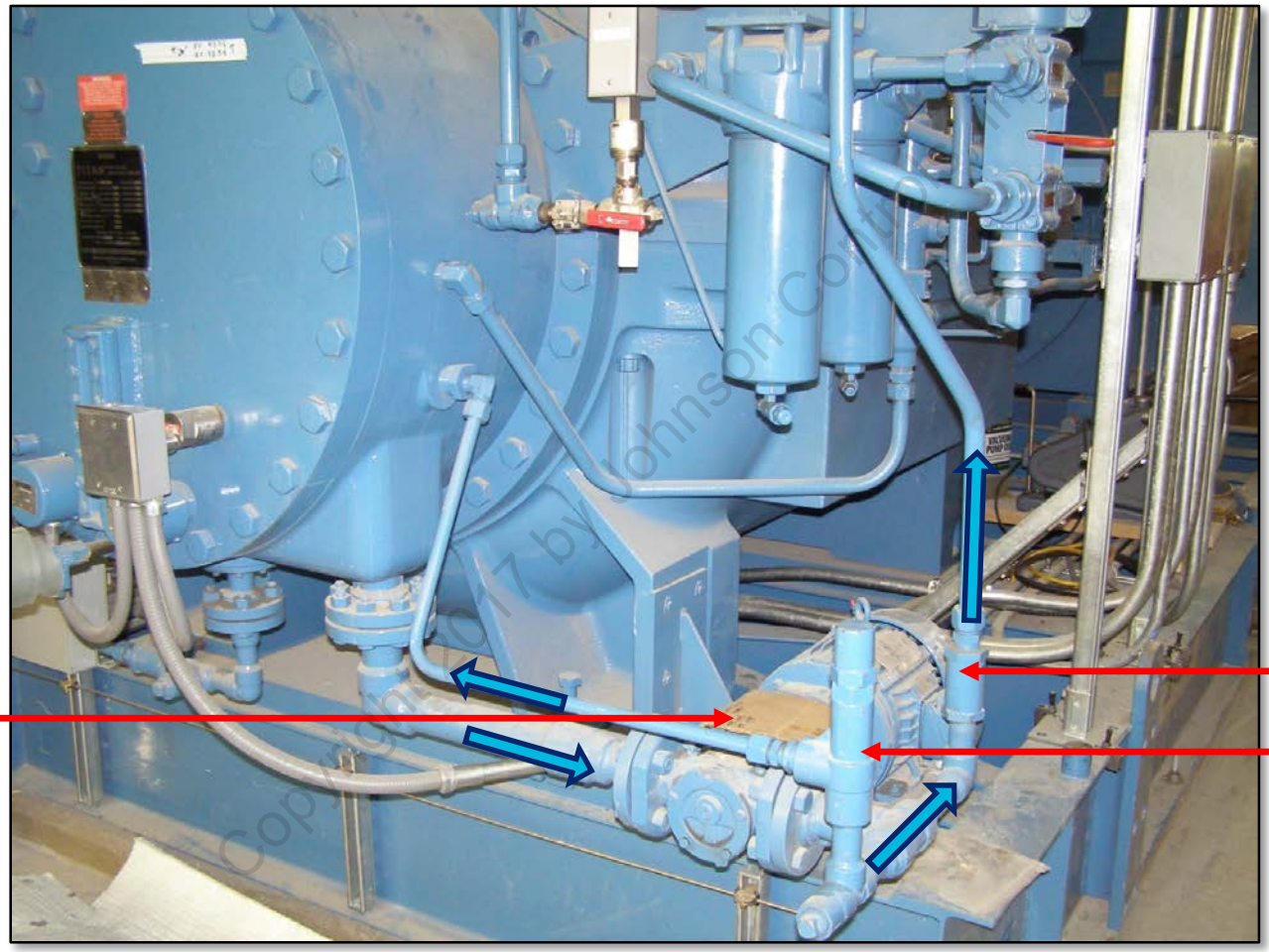

Copyright 2017 by Johnson Controls

Auxiliary Oil Pump—How Does It Work?

1. The Auxiliary Oil Pump takes oil from the oil sump.
2. The oil goes through a pressure regulating valve. Excess oil is vented back to the sump.
3. The oil flows to the main bearings through the oil filters.
4. The oil returns to the main sump.

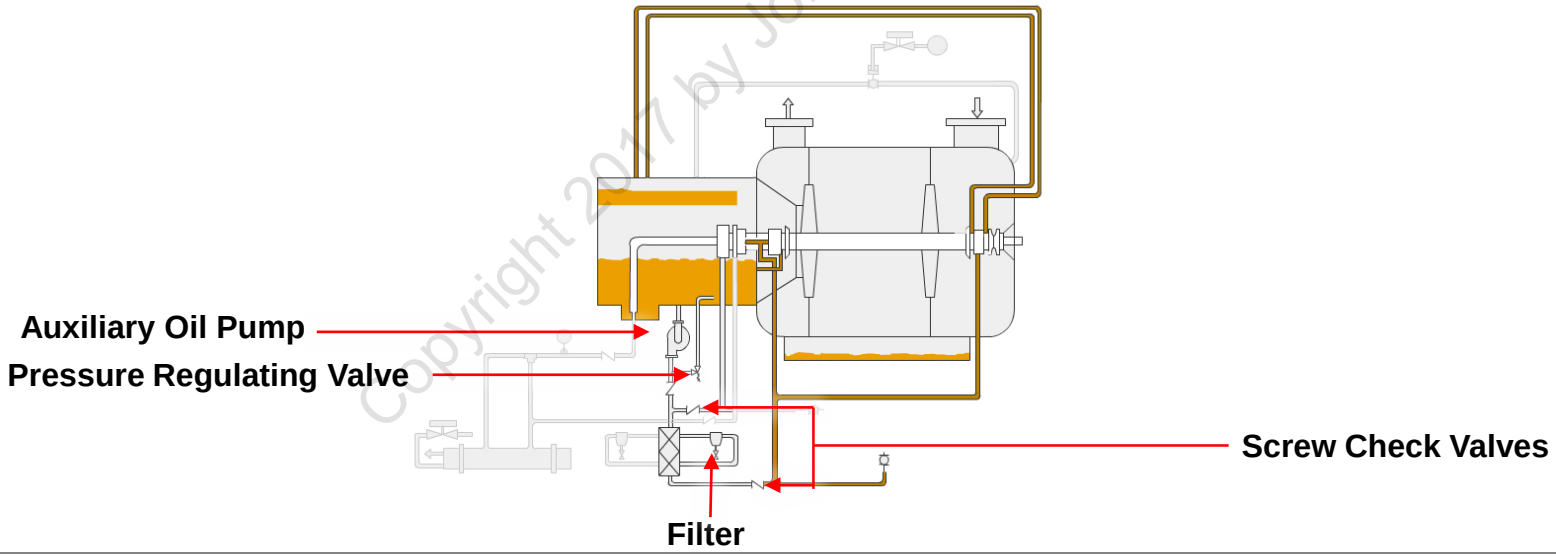

Copyright 2017 by Johnson Controls Inc

Main Oil Pump

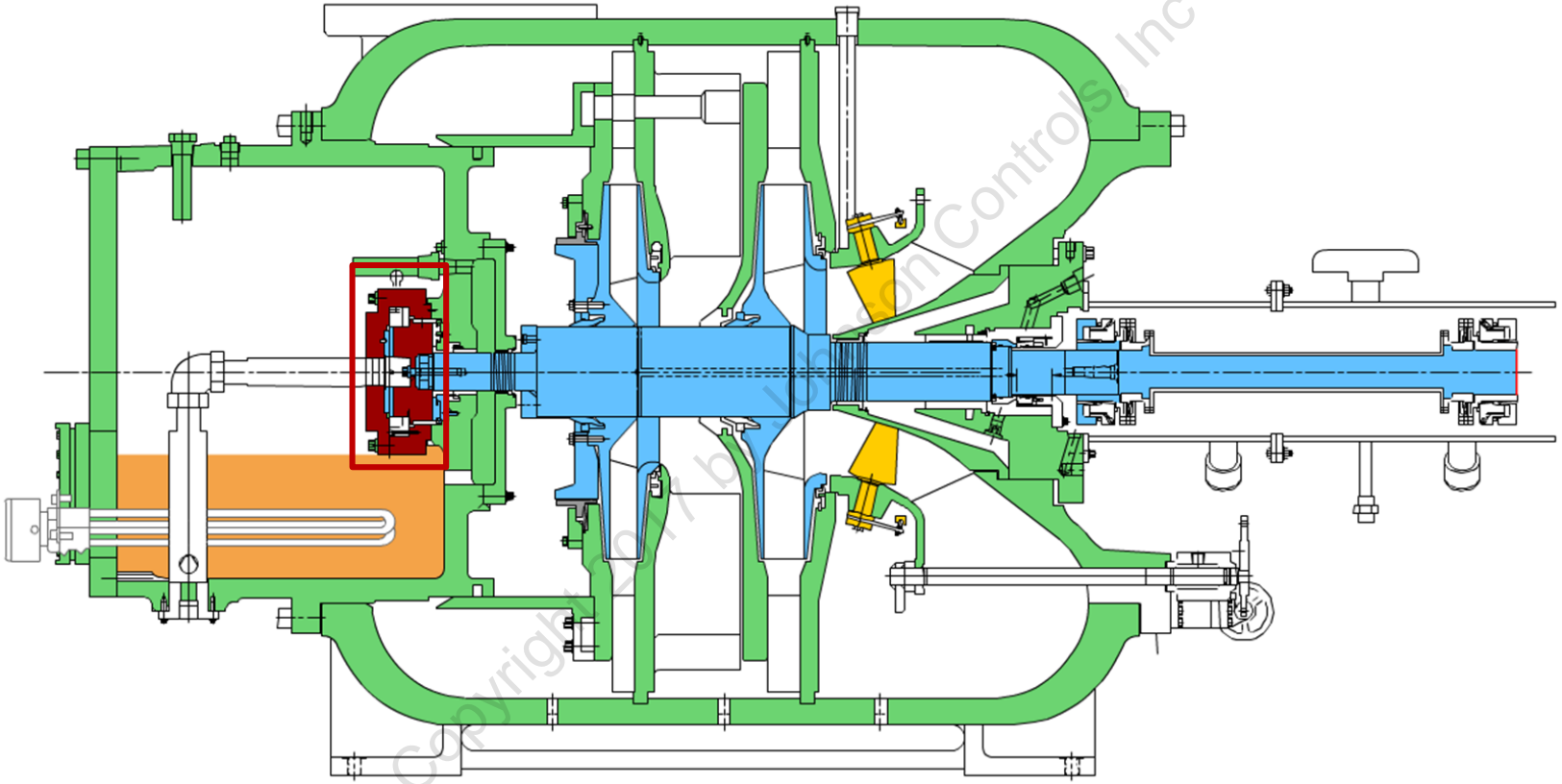

Copyright 2017 by Johnson Controls, Inc

Main Oil Pump (Cont'd.)

Function: Pumps oil continually to the compressor's rotating components

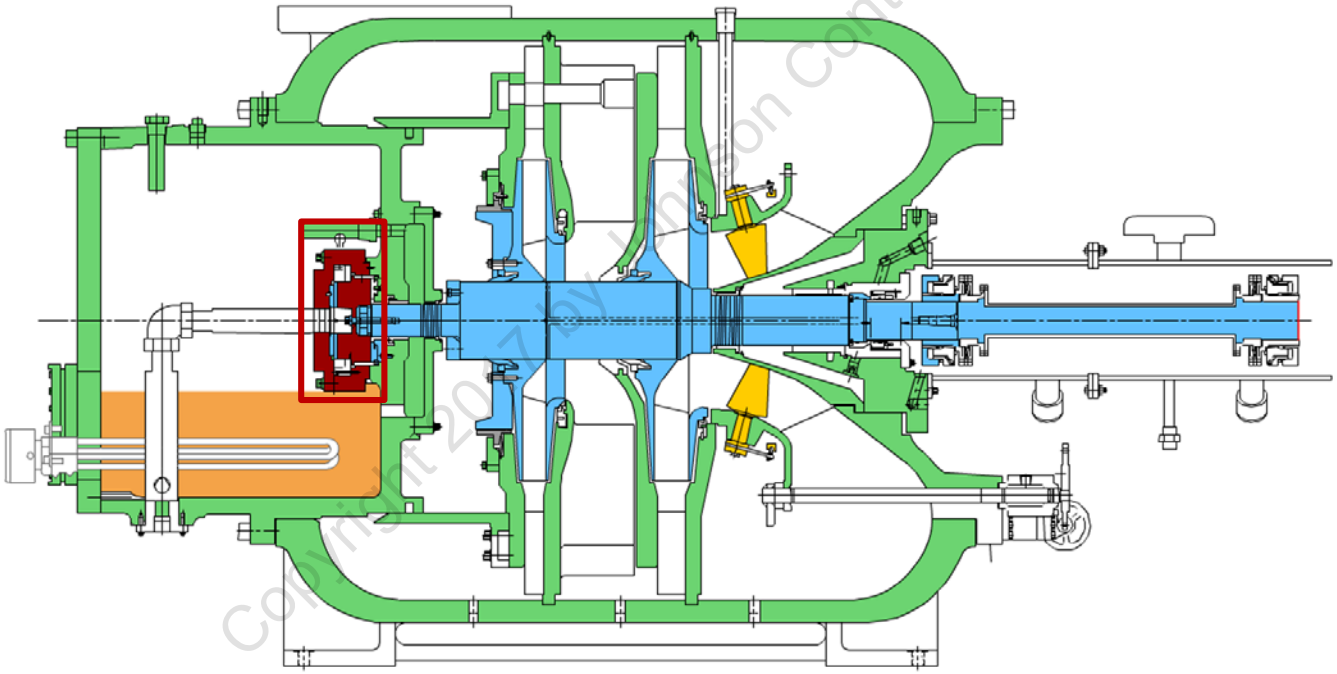

Copyright 2017 by Johnson Controls, Inc.

Main Oil Pump (Cont'd.)

Function: Pumps oil continually to the compressor's rotating components

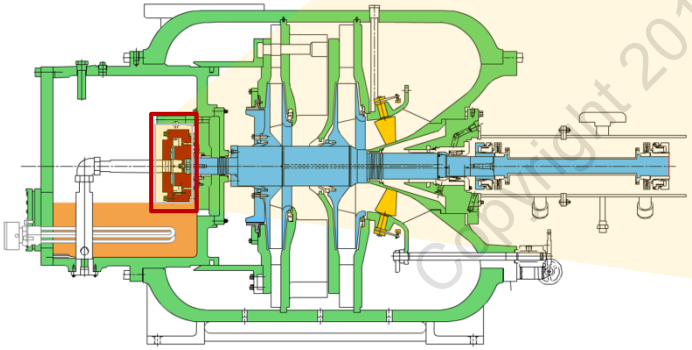

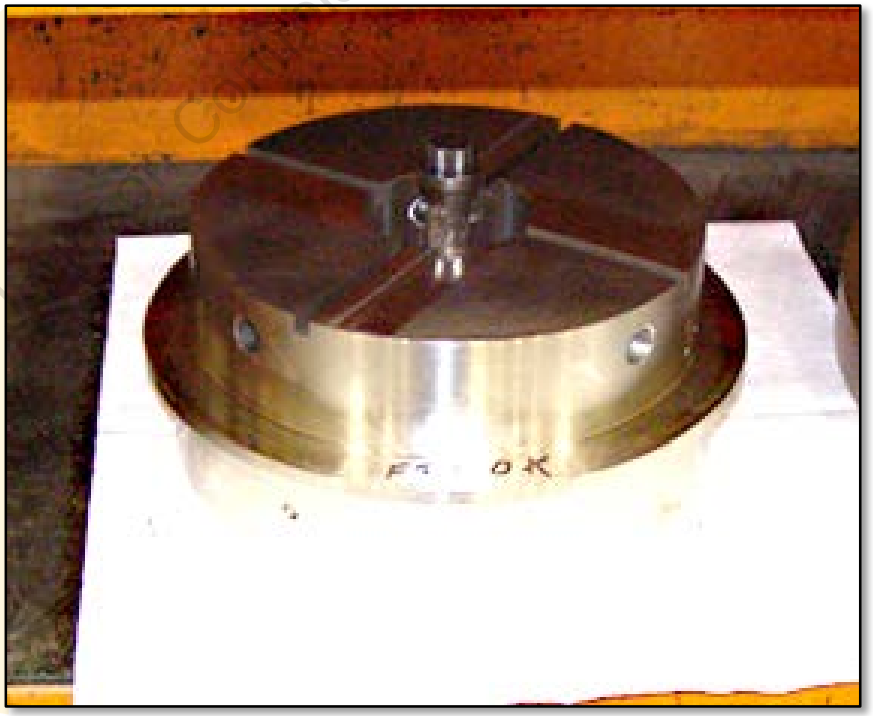

Copyright 2017 by Johnson Controls, Inc

Main Oil Pump Inside the Oil Sump

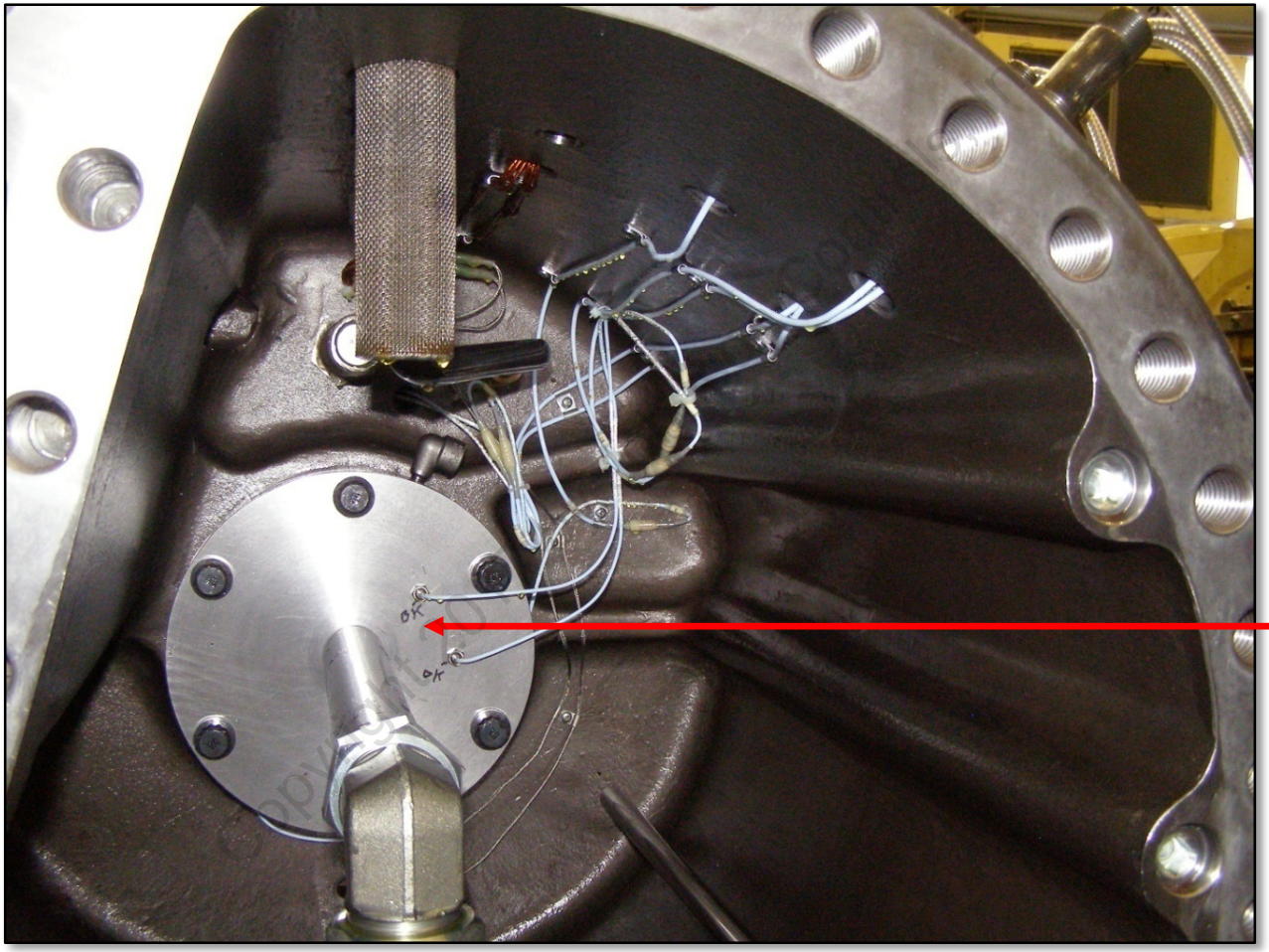

Oil Pump is behind this cover

Our Policy prohibits printing. Save GREEN.

Main Oil Pump—How Does It Work?



Copyright 2017 by Johnson Controls, Inc.

- Provides a continuous flow of oil
- Gets the oil through the jet pump

Jet Pump

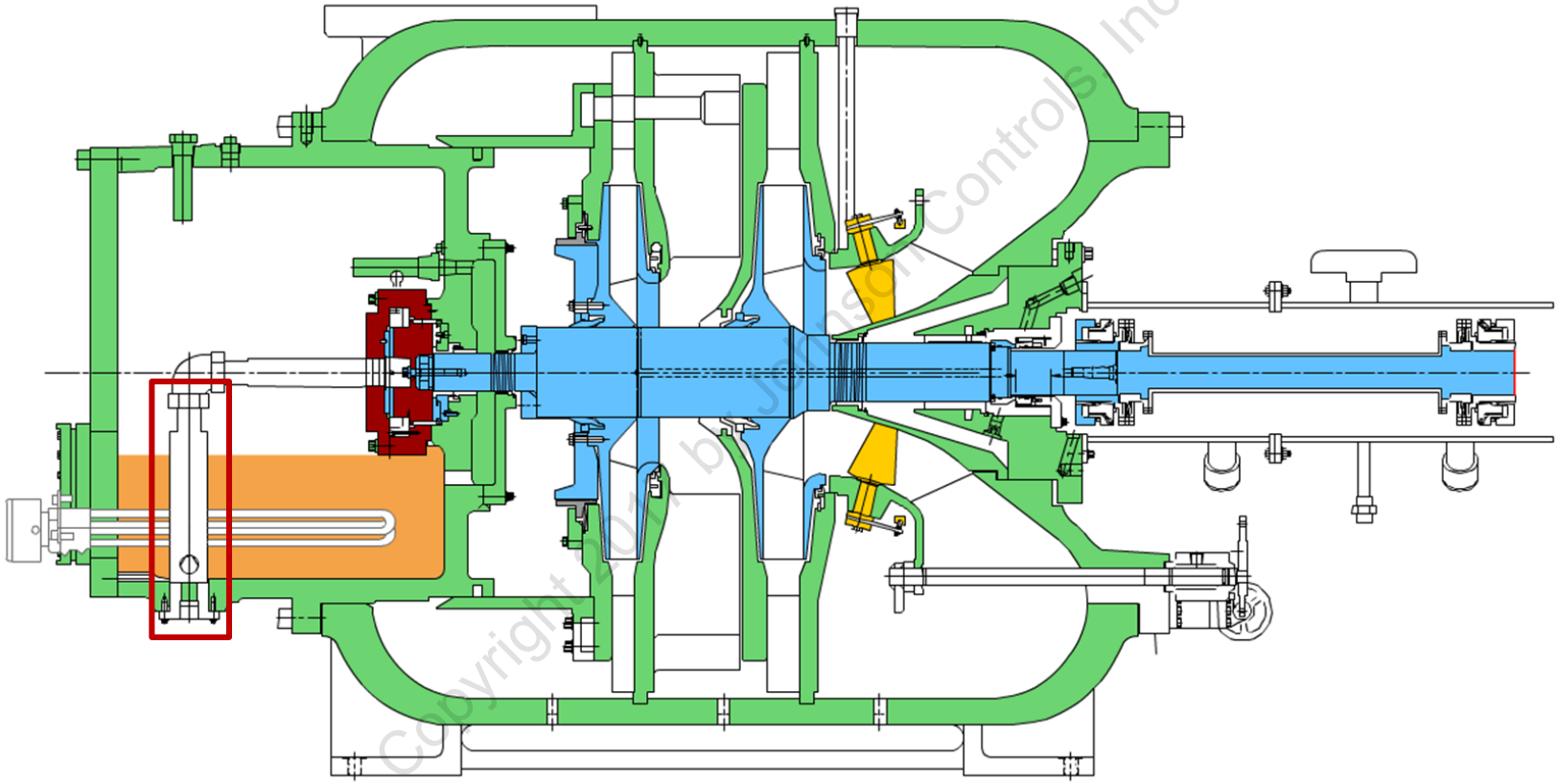

Jet Pump (Cont'd.)

Function: Returns the oil lubricating the thrust surface to the oil pump.
Part of the oil pump provides oil to the bottom entrance of the jet pump.
The small nozzle makes a low pressure area directly in front of the jet pump.
This low pressure area draws oil from the sump and pushes it to the inlet of the main oil pump.

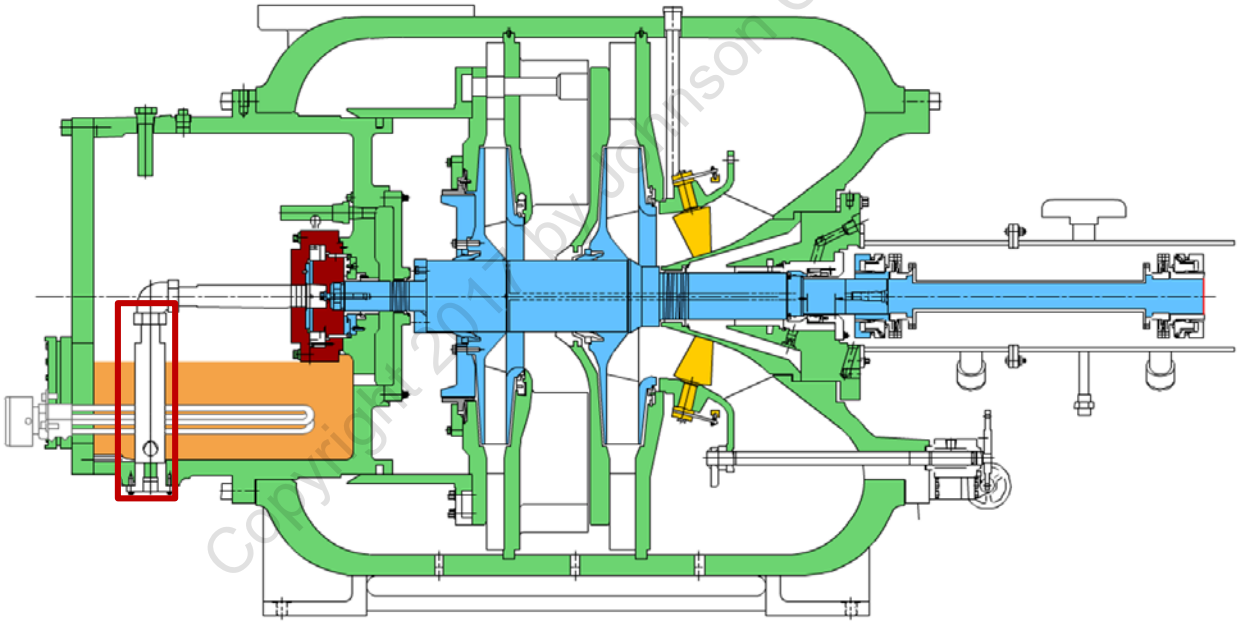

Copyright 2011 by Johnson Controls Inc

Jet Pump (Cont'd.)

Function: Returns the oil lubricating the thrust surface to the oil pump.
Part of the oil pump provides oil to the bottom entrance of the jet pump.
The small nozzle makes a low pressure area directly in front of the jet pump.
This low pressure area draws oil from the sump and pushes it to the inlet of the main oil pump.

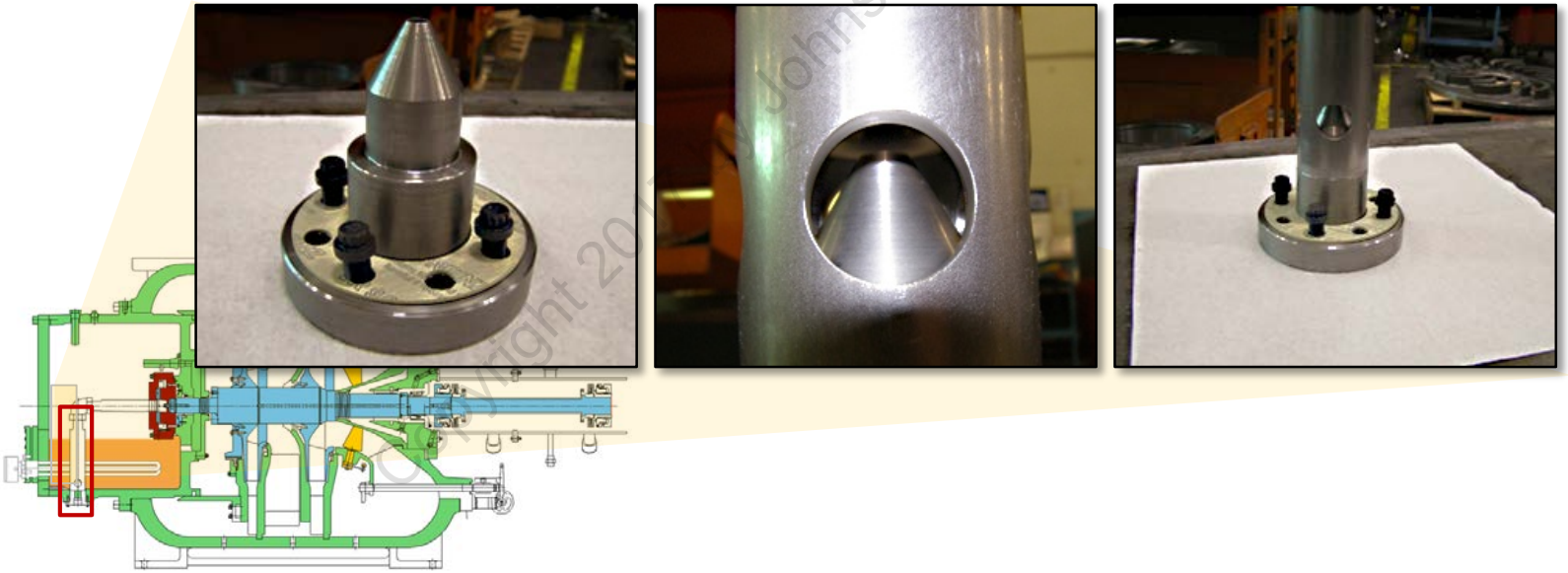

Copyright 2017 Johnson Controls Inc

Jet Pump Inside the Oil Sump

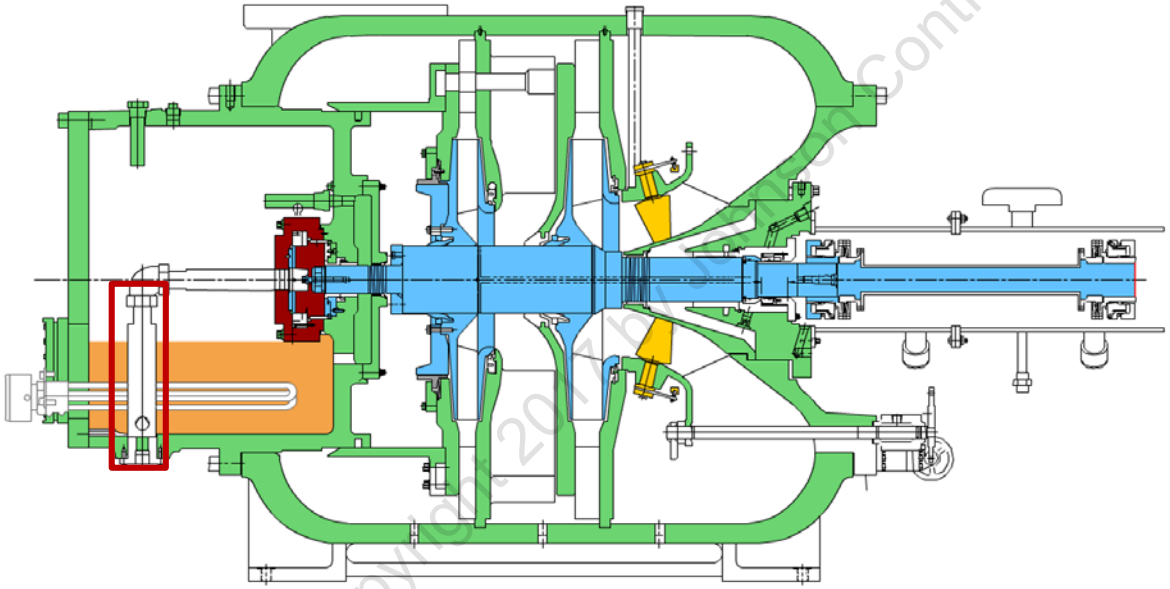

Copyright 2017 by Johnson Controls, Inc

Jet Pump Inside the Oil Sump (Cont'd.)

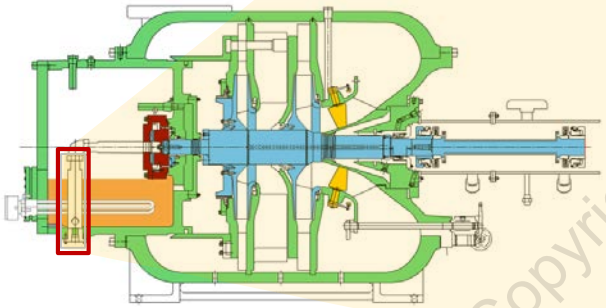

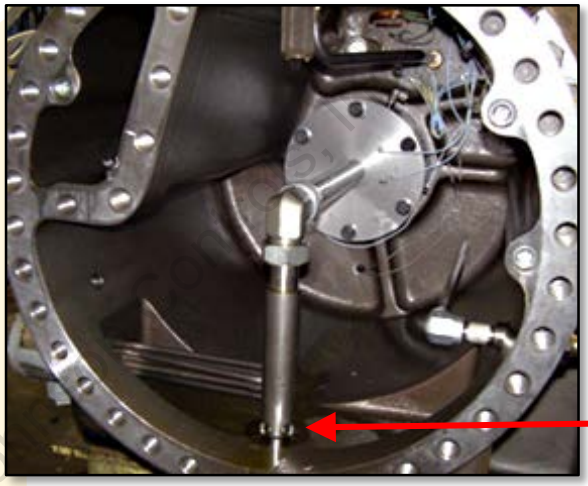

Jet Pump

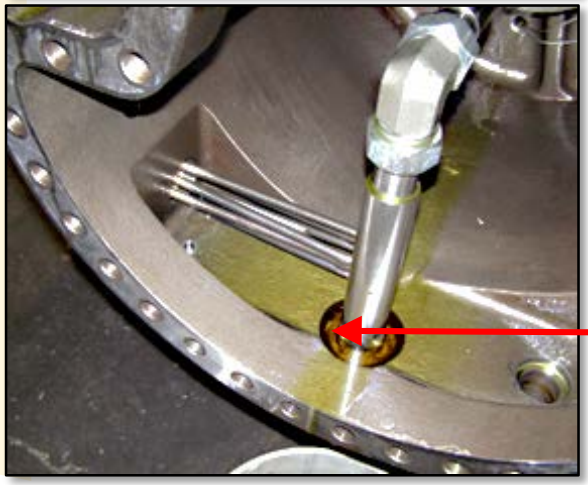

Jet Pump

Copyright 2017 by Jo

Jet Pump—How Does It Work?

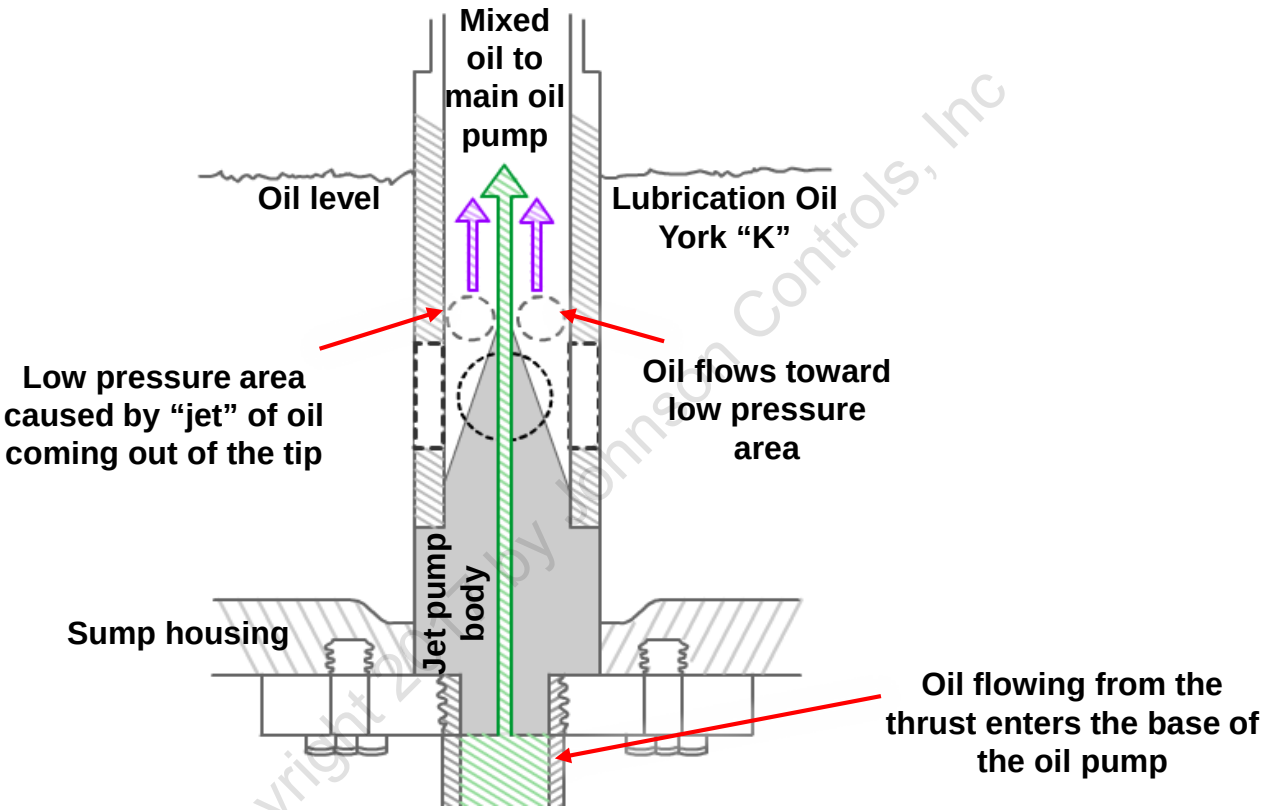

Copyright 2010 by Johnson Controls, Inc

- Oil, off the thrust, is circulated through the oil coolers to the main oil pump
- Additional oil is supplied to the main oil pump

Jet Pump—How Does It Work? (Cont'd.)

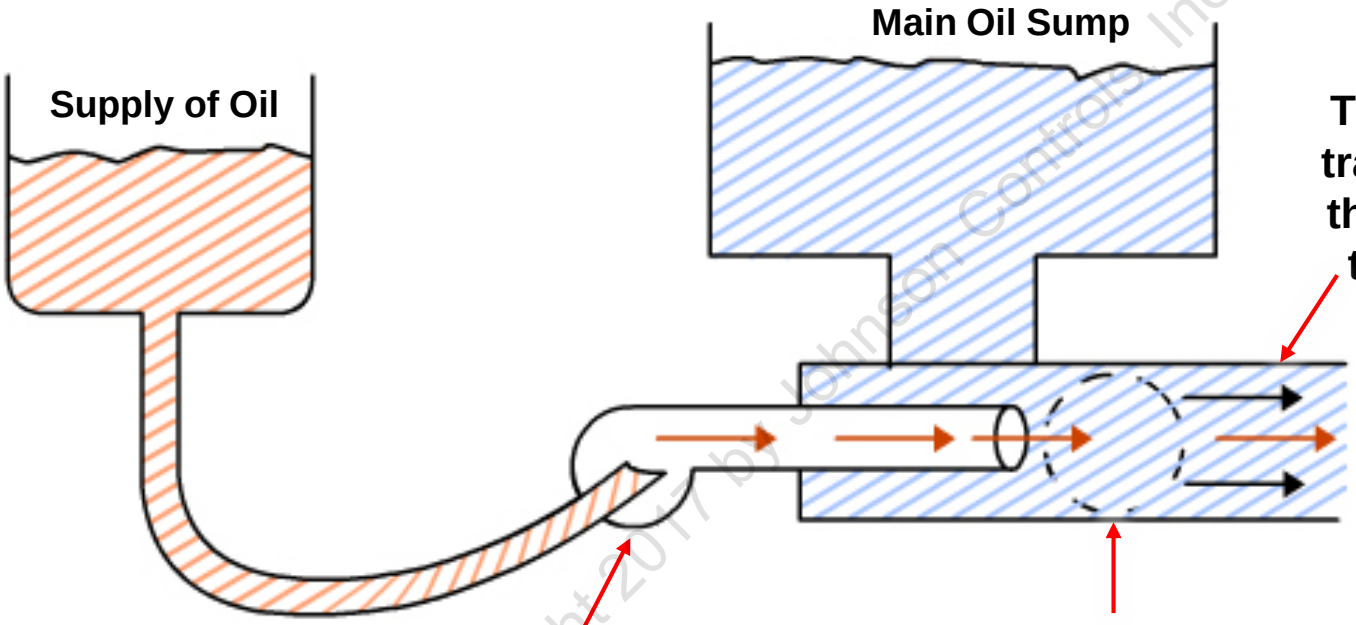

Copyright 2017 by Johnson Controls, Inc

Oil Heater

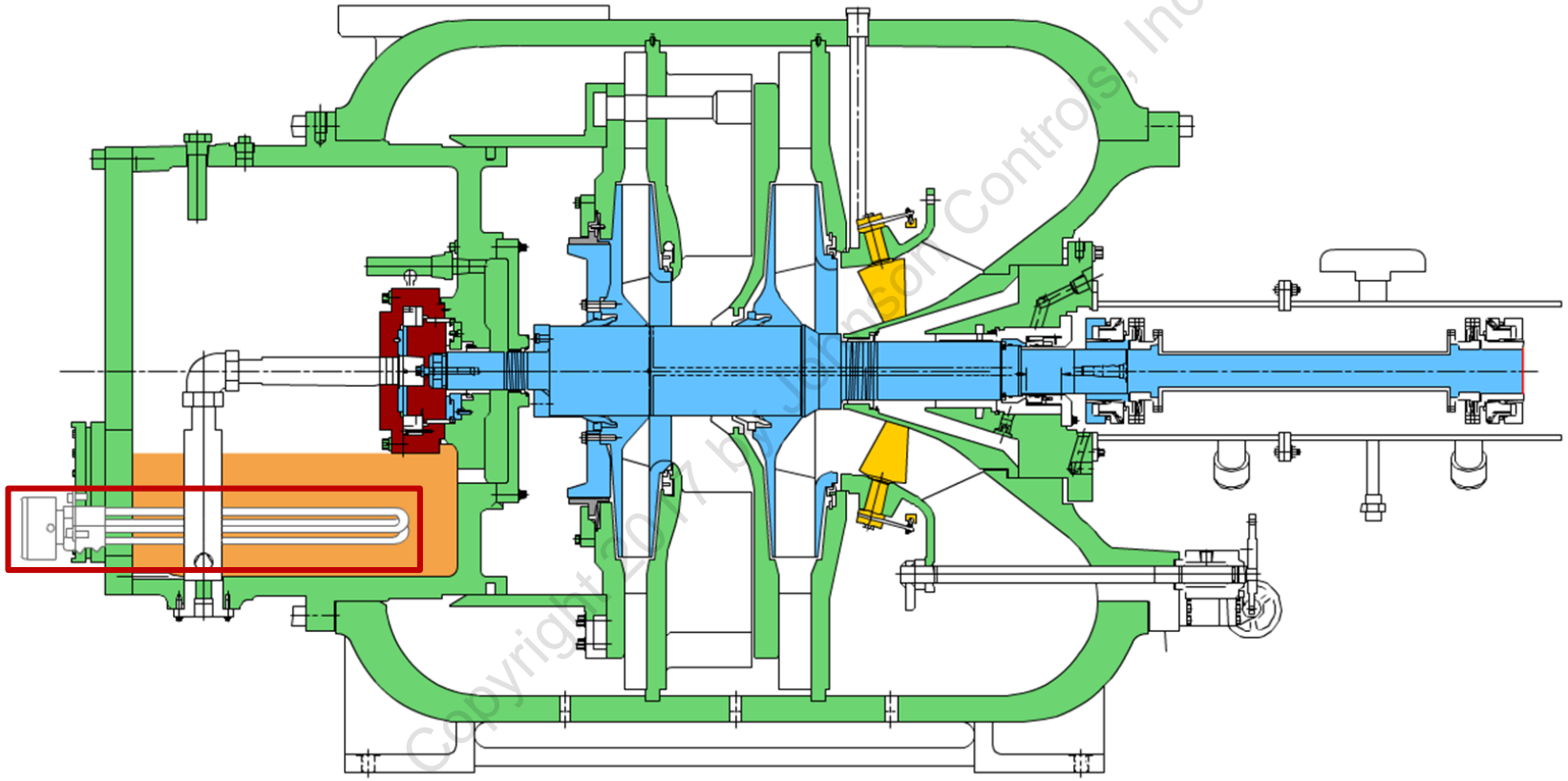

Copyright 2017 by Johnson Controls, Inc

Oil Heater (Cont'd.)

Function: Maintains about 150 °F/65.5 °C sump oil temperature during the shutdown to minimize refrigerant accumulation in oil.

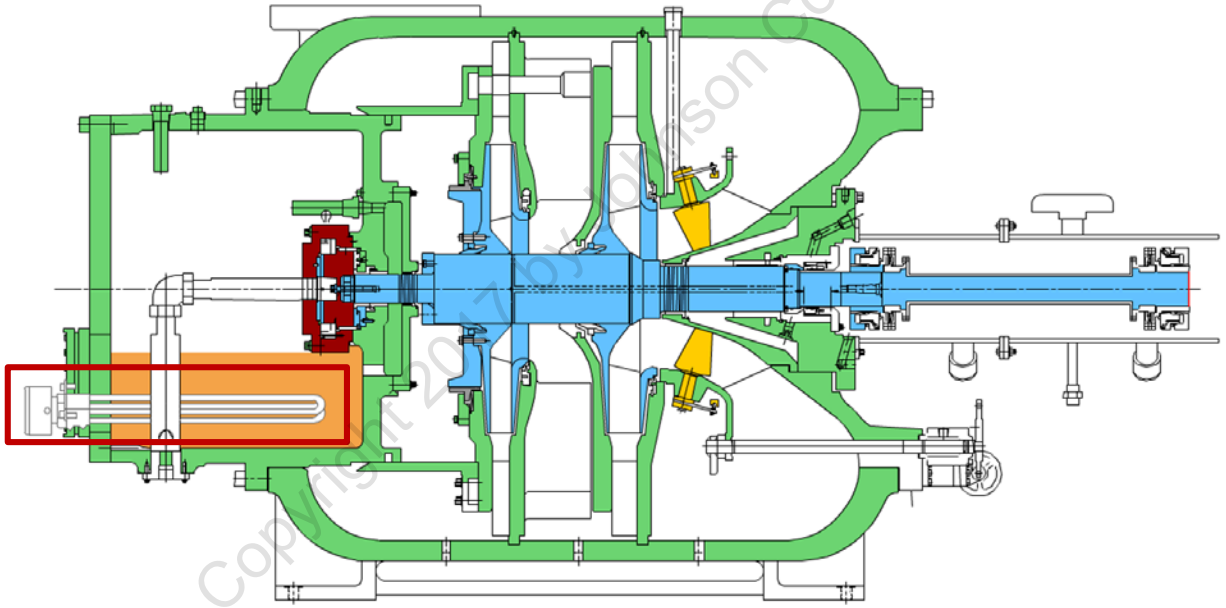

Copyright 2017 by Johnson Controls, Inc

Oil Heater (Cont'd.)

Function: Maintains about 150 °F/65.5 °C sump oil temperature during the shutdown to minimize refrigerant accumulation in oil.

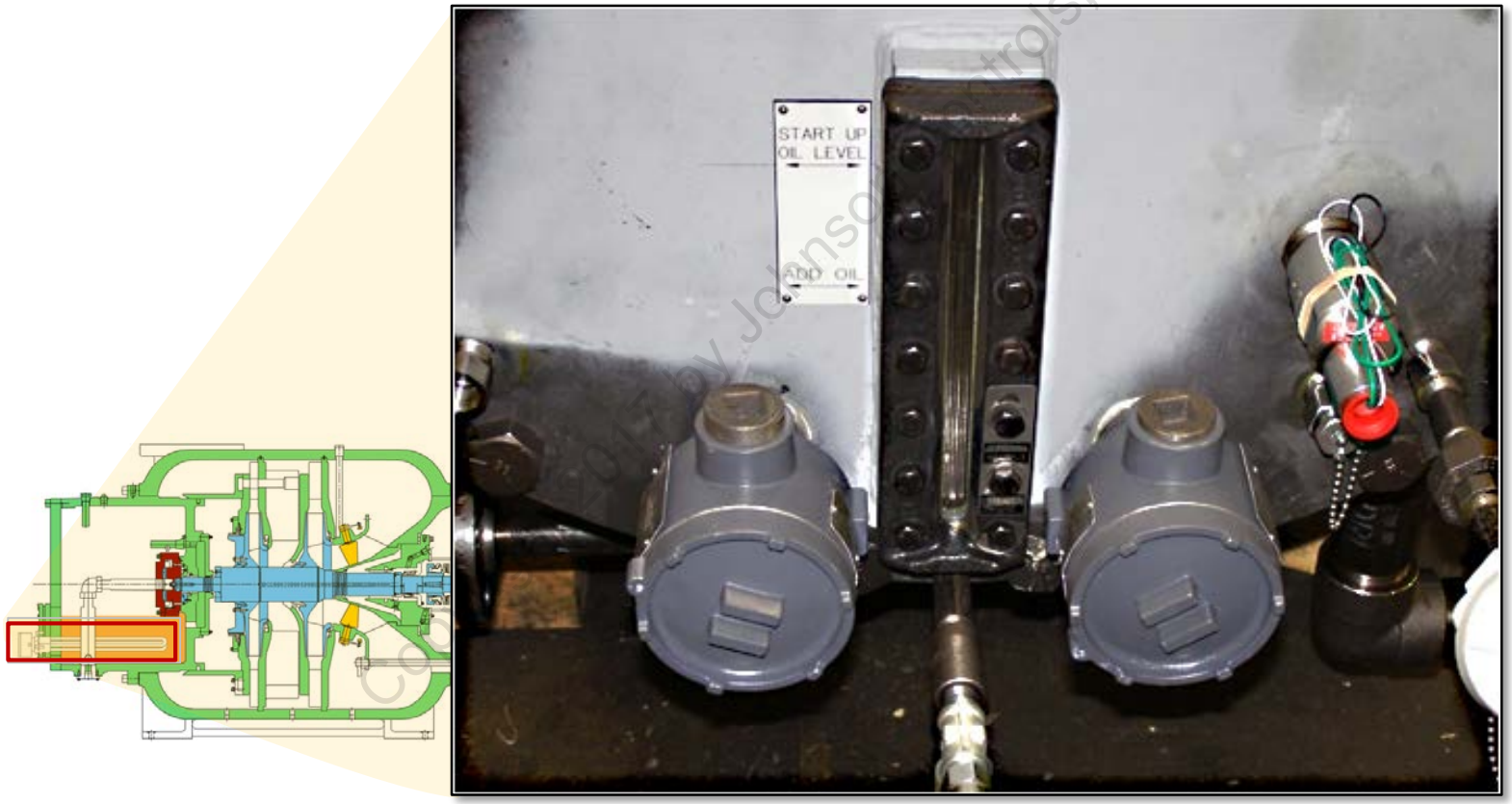

Copyright by Johnson Controls, Inc

Oil Heater (Cont'd.)

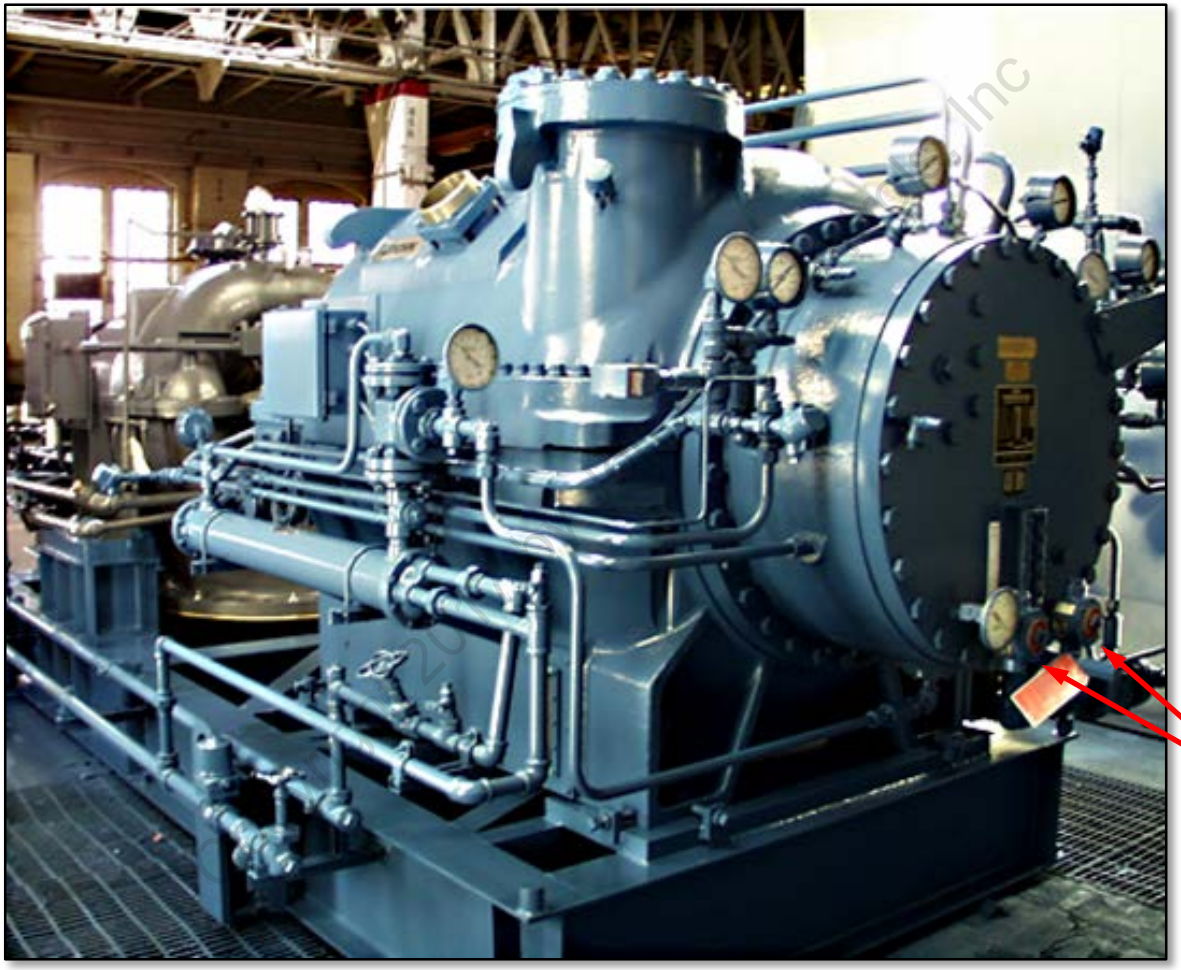

Oil Heater—How Does It Work?

Thermostatically controlled either by the control panel or a hand thermostat.

Electrical heaters set at 150 °F/65.55 °C.

Control panel set to energize the heater upon shutdown and switch off during the operation.

Oil temperature falls to 4 °F/-15.55 °C or more below the target implies that the heater is on.

Oil temperature goes up by 3 °F/-16.11 °C or more above the target implies that the heater is off.

Mechanical thermostat set to (open) to prevent overheating of oil.

Copyright 2017 by Johnson Controls, Inc

Oil Cooler

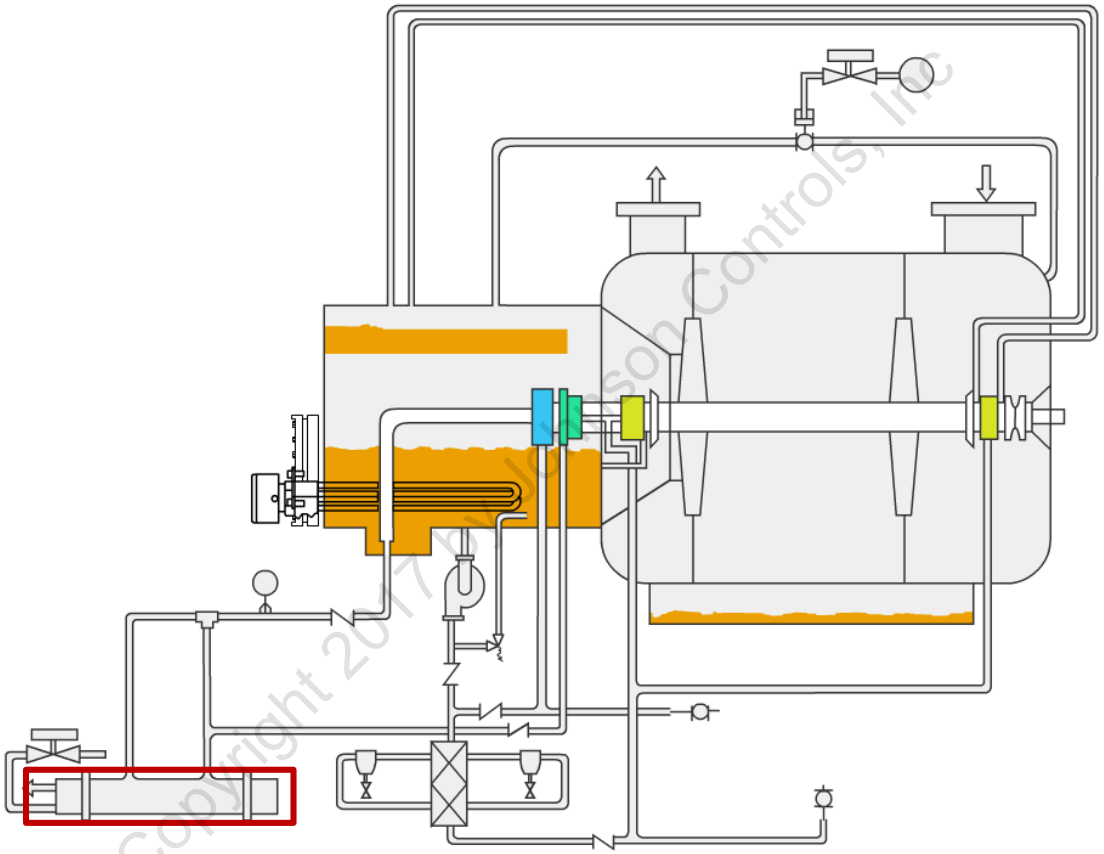

Why do we need an oil cooler?

Oil Cooler (Cont'd.)

Function: Cools the oil that has absorbed heat from the bearings before returning it to the oil sump

This cooler is controlled by a thermostatically controlled (AMOT) valve.

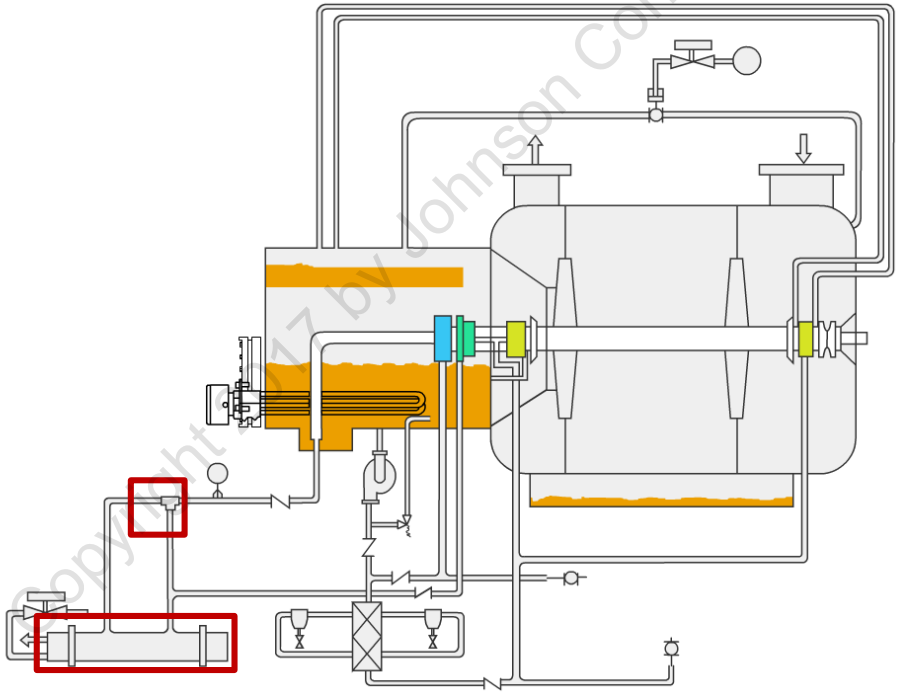

Copyright 2017 by Johnson Controls, Inc

Oil Cooler (Cont'd.)

Function: Cools the oil that has absorbed heat from the bearings before returning it to the oil sump

This cooler is controlled by a thermostatically controlled (AMOT) valve.

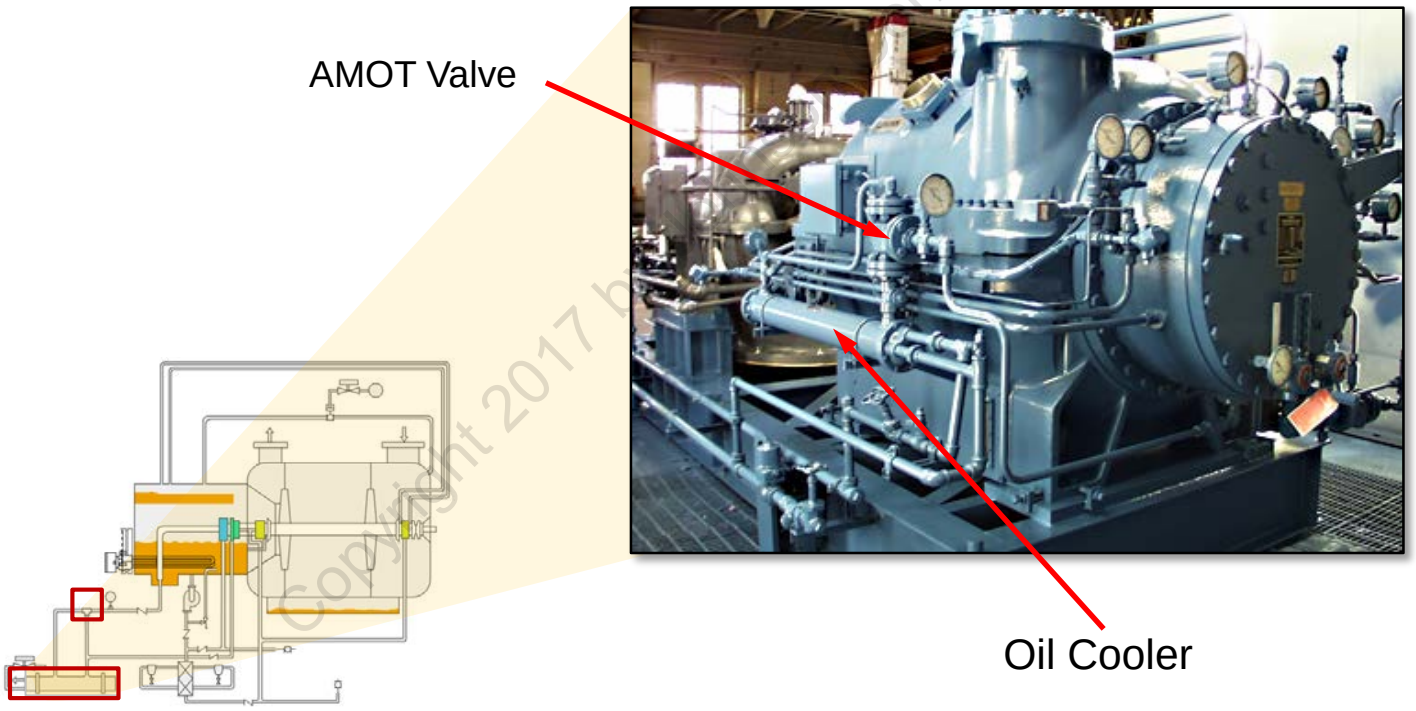

Copyright 2017 by Johnson Controls, Inc

Oil Cooler—How Does it Work?

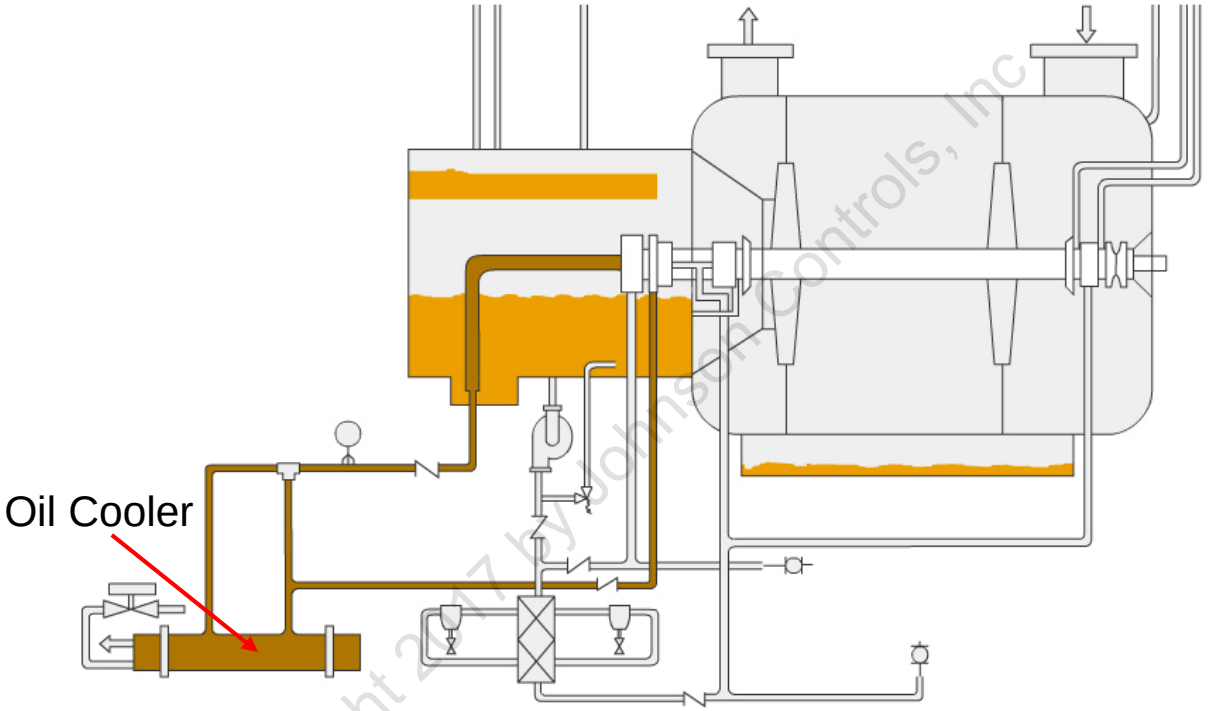

Copyright 2017 by Johnson Controls, Inc.

- Water tube cooler
- Hot oil from the bearings enters the oil cooler and gets cooled by the transfer of heat

Oil Filters

10 micron filters

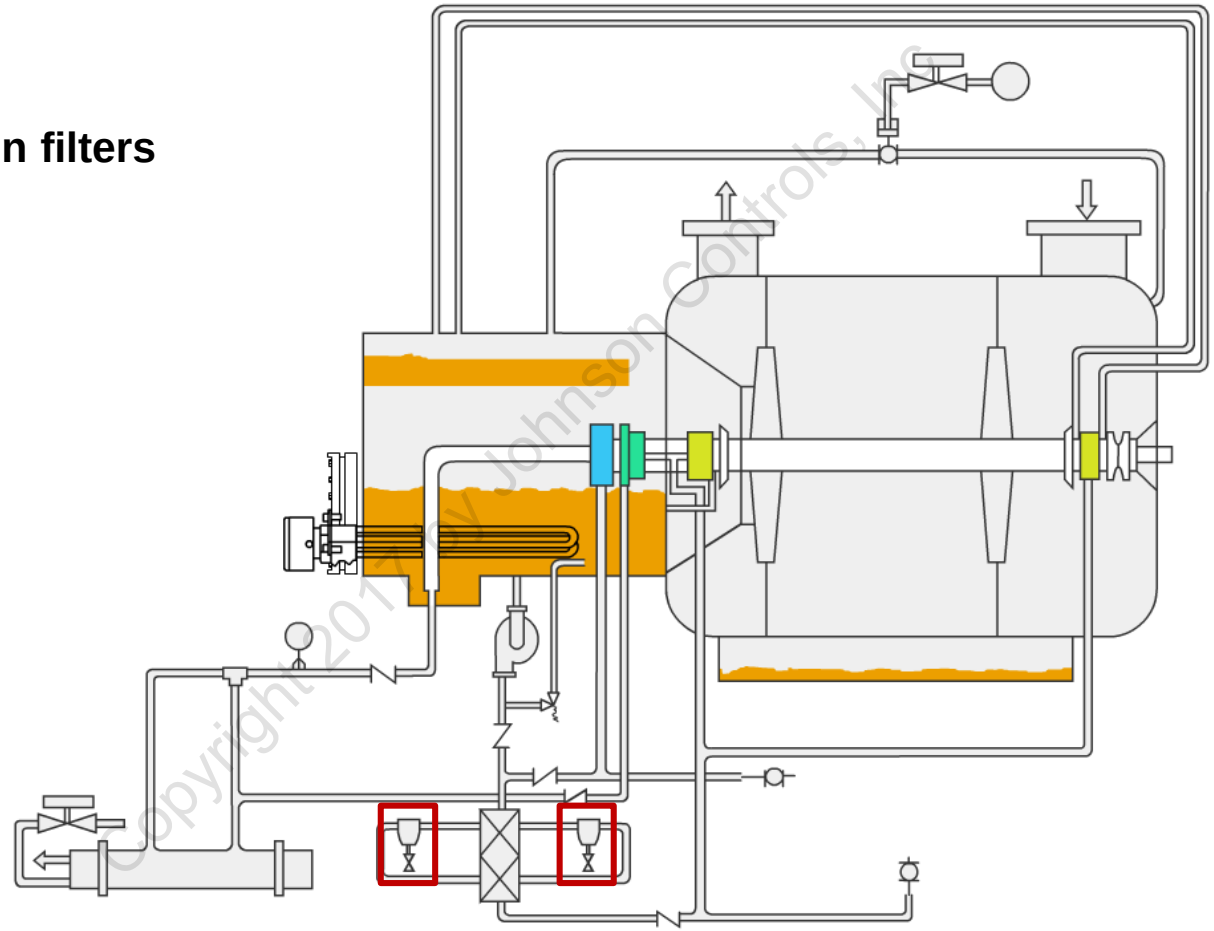

Copyright 2017 by Johnson Controls, Inc.

Oil Filters (Cont'd.)

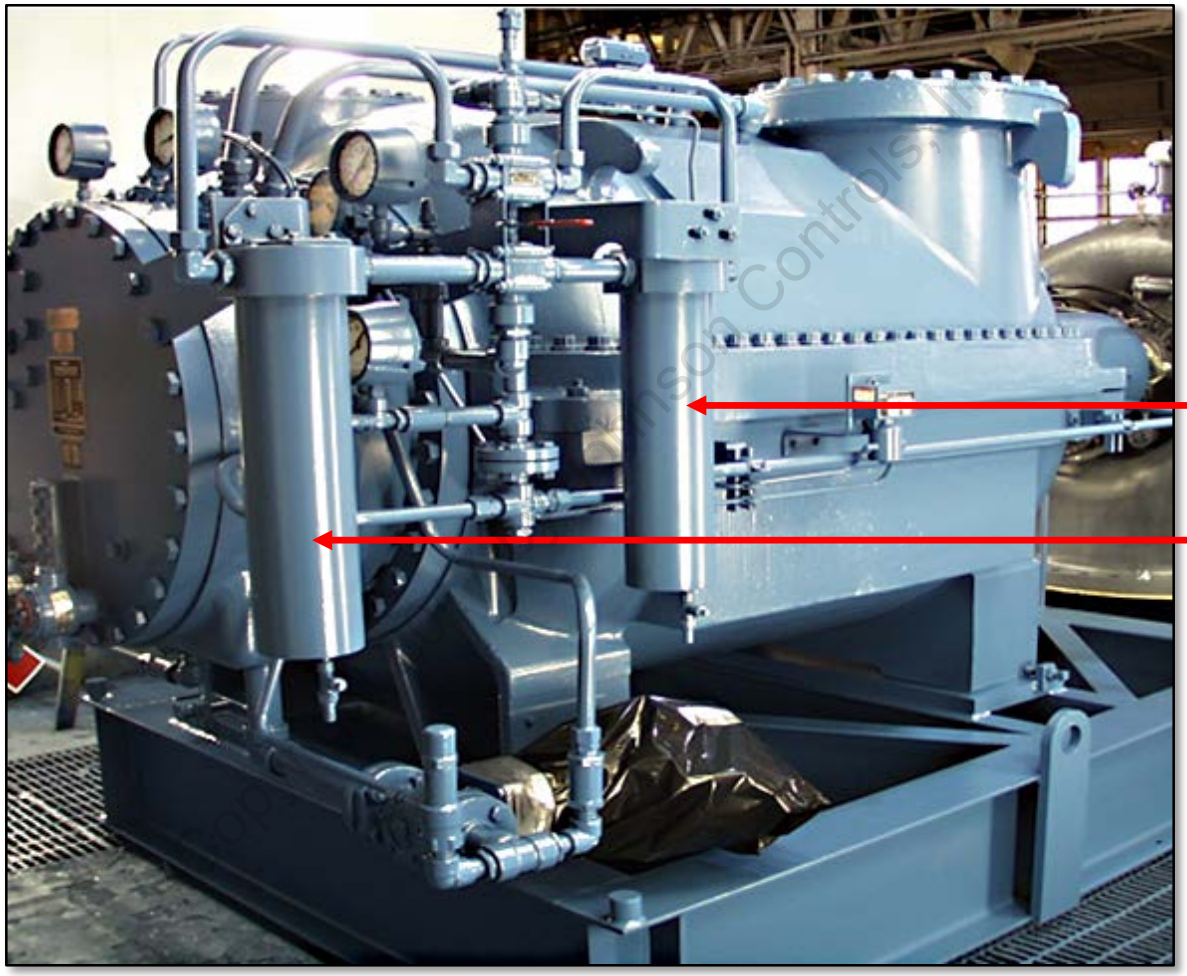

Oil Filters (Cont'd.)

Function: Protects the machine from harmful solid material(s)

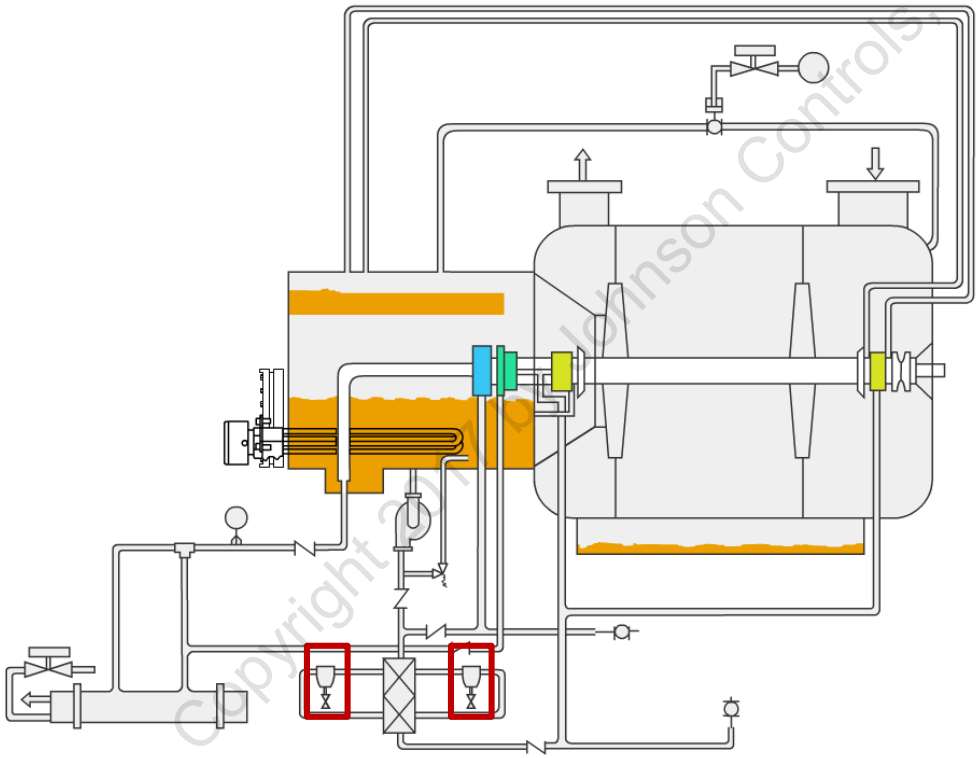

Copyright 2010 Johnson Controls, Inc

Oil Filters (Cont'd.)

Function: Protects the machine from harmful solid material(s)

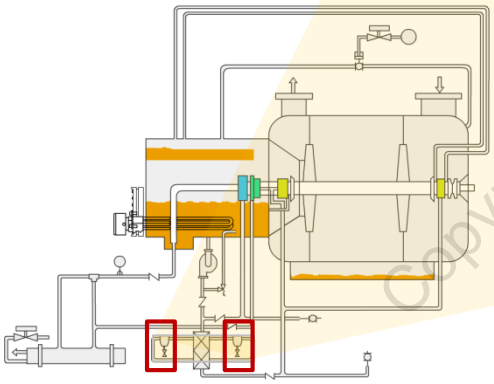

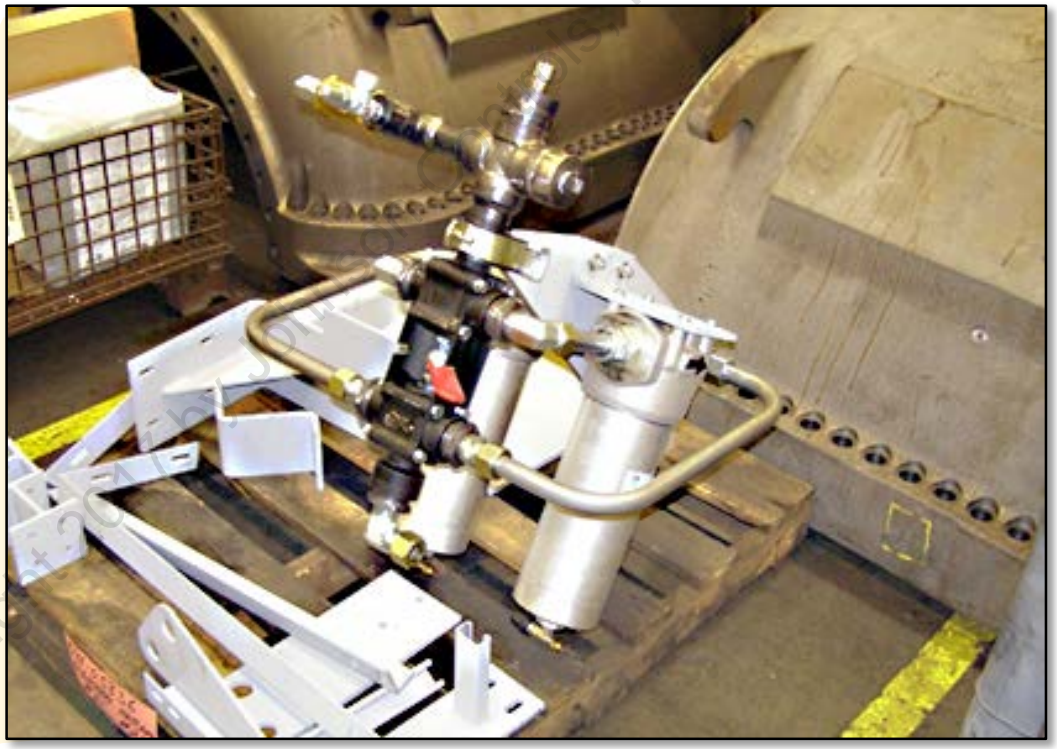

Copyright © 2014 by Johnson Controls Inc

Check Your Understanding—1

What is the purpose of having two filters in the compressor?

- [x] a. If one gets dirty, the other can perform the job of filtering the debris and dirt
- [ ] b. Both are required for smooth operation of the compressor
- [ ] c. Both a and b
- [ ] d. None of the above

Copyright 2017 by Johnson Controls, Inc



Oil Piping

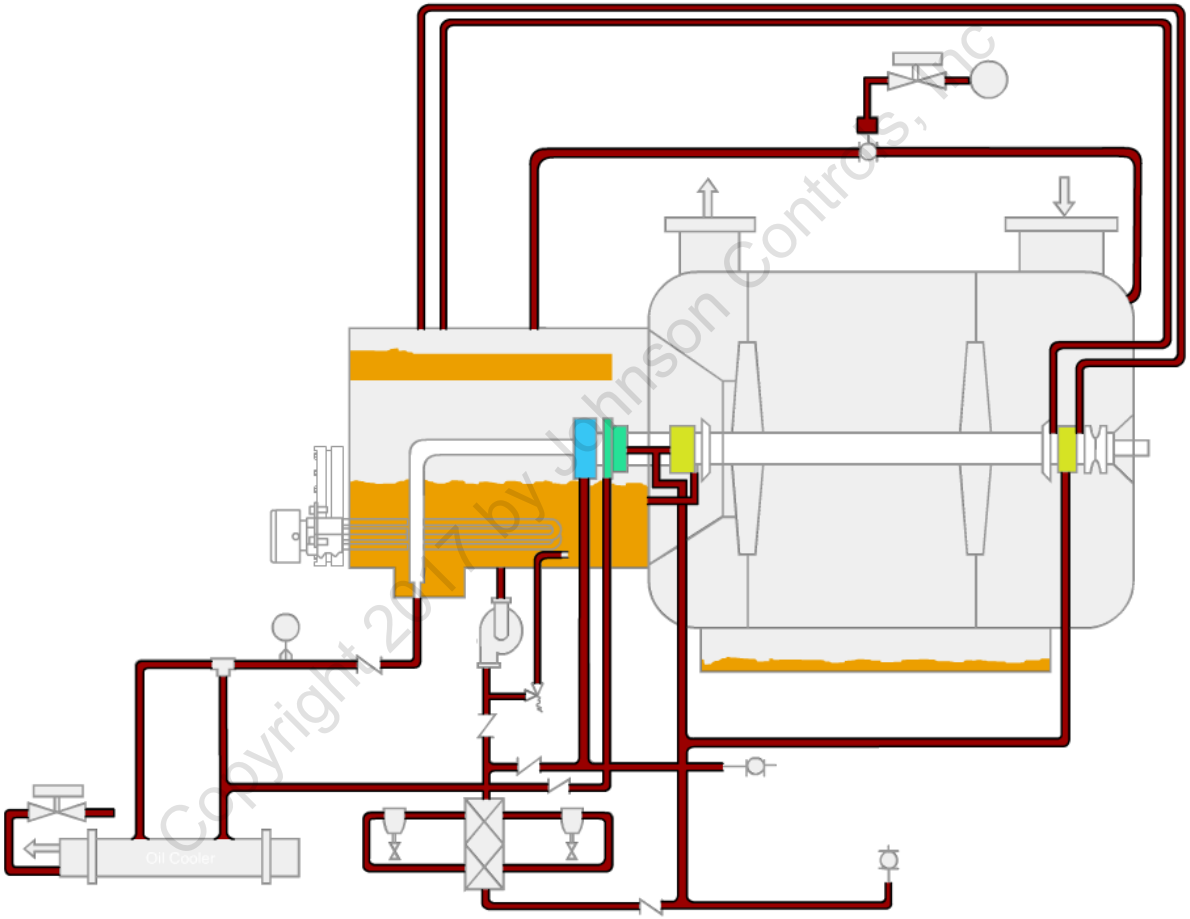

Copyright 2017 by Johnson Controls, Inc

Oil Piping (Cont'd.)

Function: Interconnects the lubrication system components

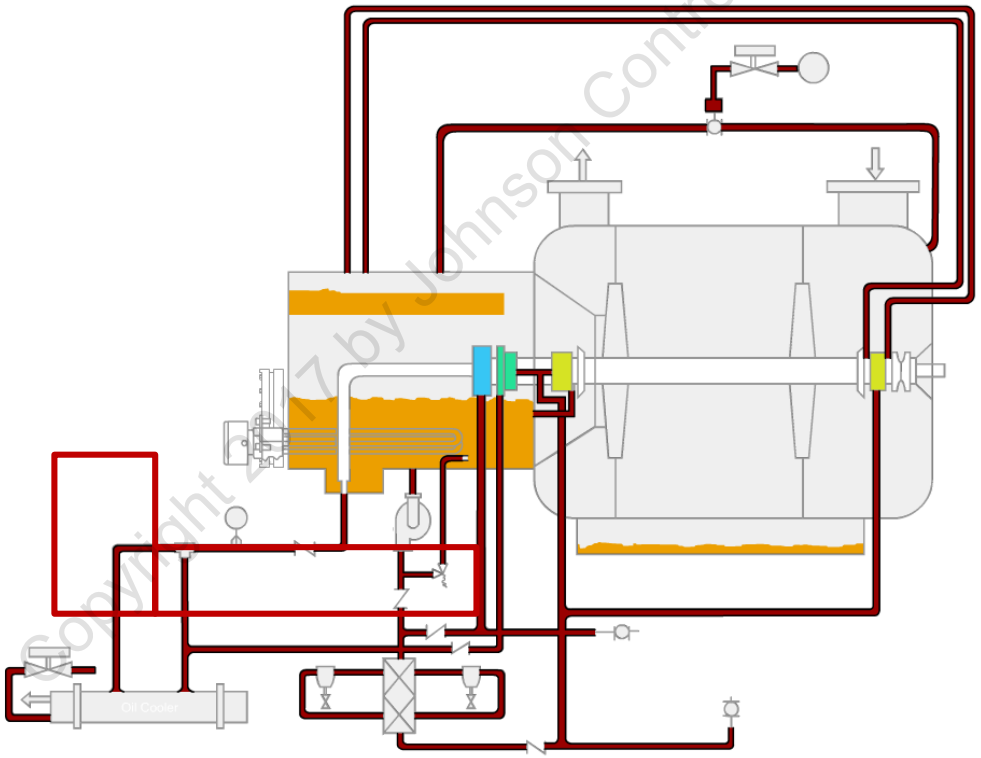

Copyright 2017 by Johnson Controls, Inc

Oil Piping (Cont'd.)

Function: Interconnects the lubrication system components

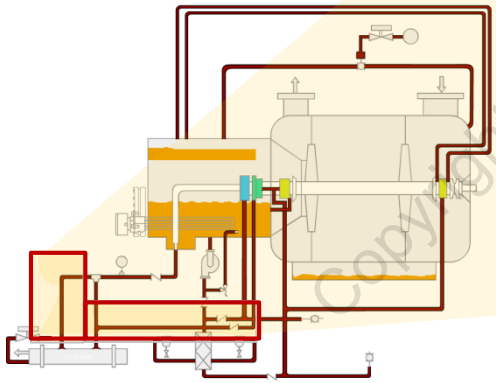



Copyright 2017 by Johnson Controls Inc

Oil Piping (Cont'd.)

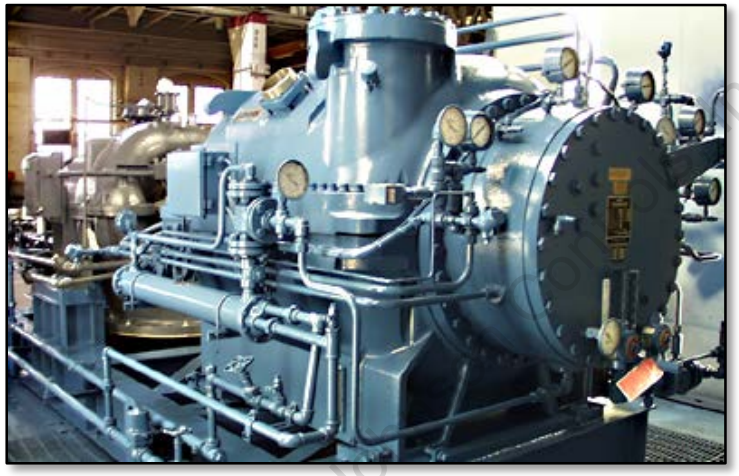

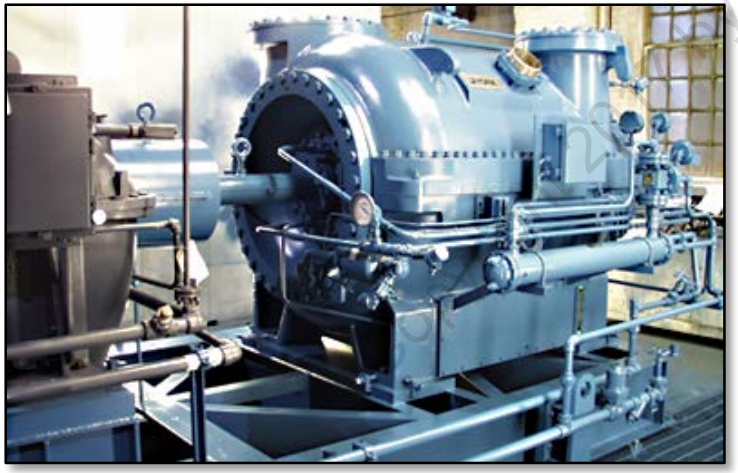

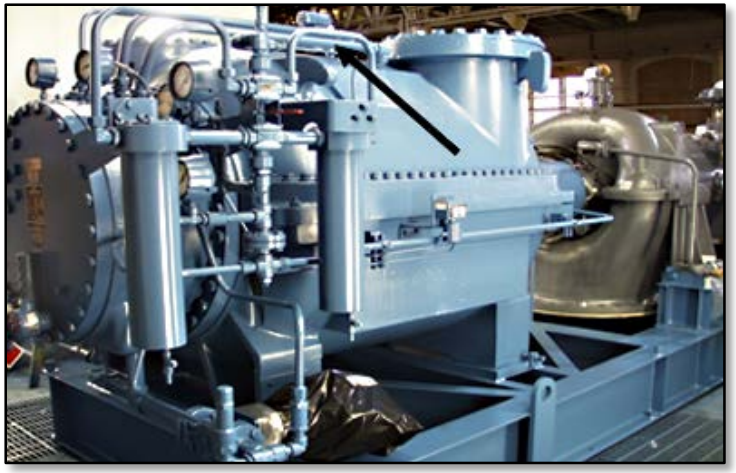

Our Policy prohibits printing. Save GREEN.

Oil Flow—Points of Lubrication

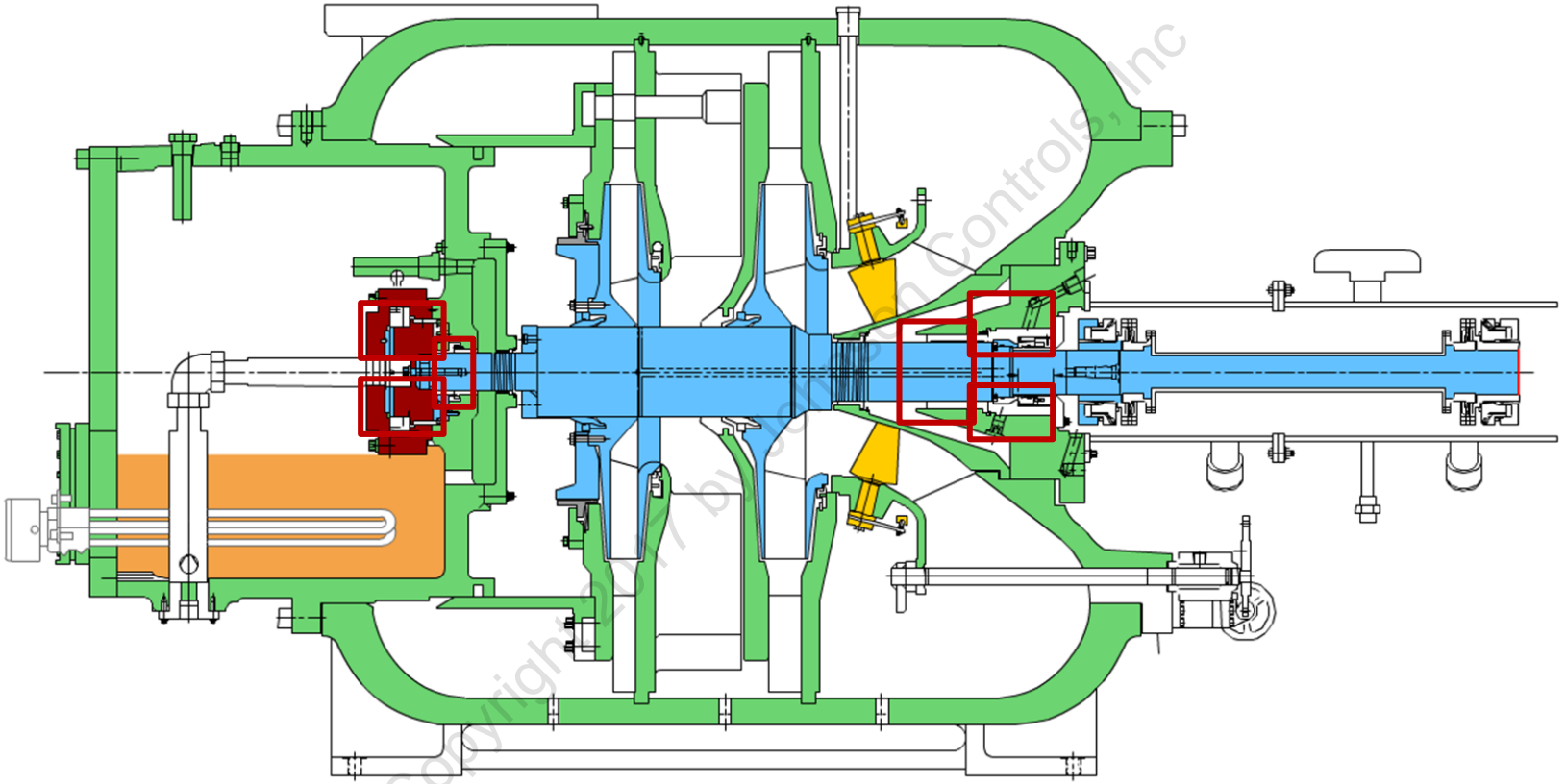

Which parts of the compressor require lubrication?

Stage 1: Pre-lube (Only Auxiliary Oil Pump Running)

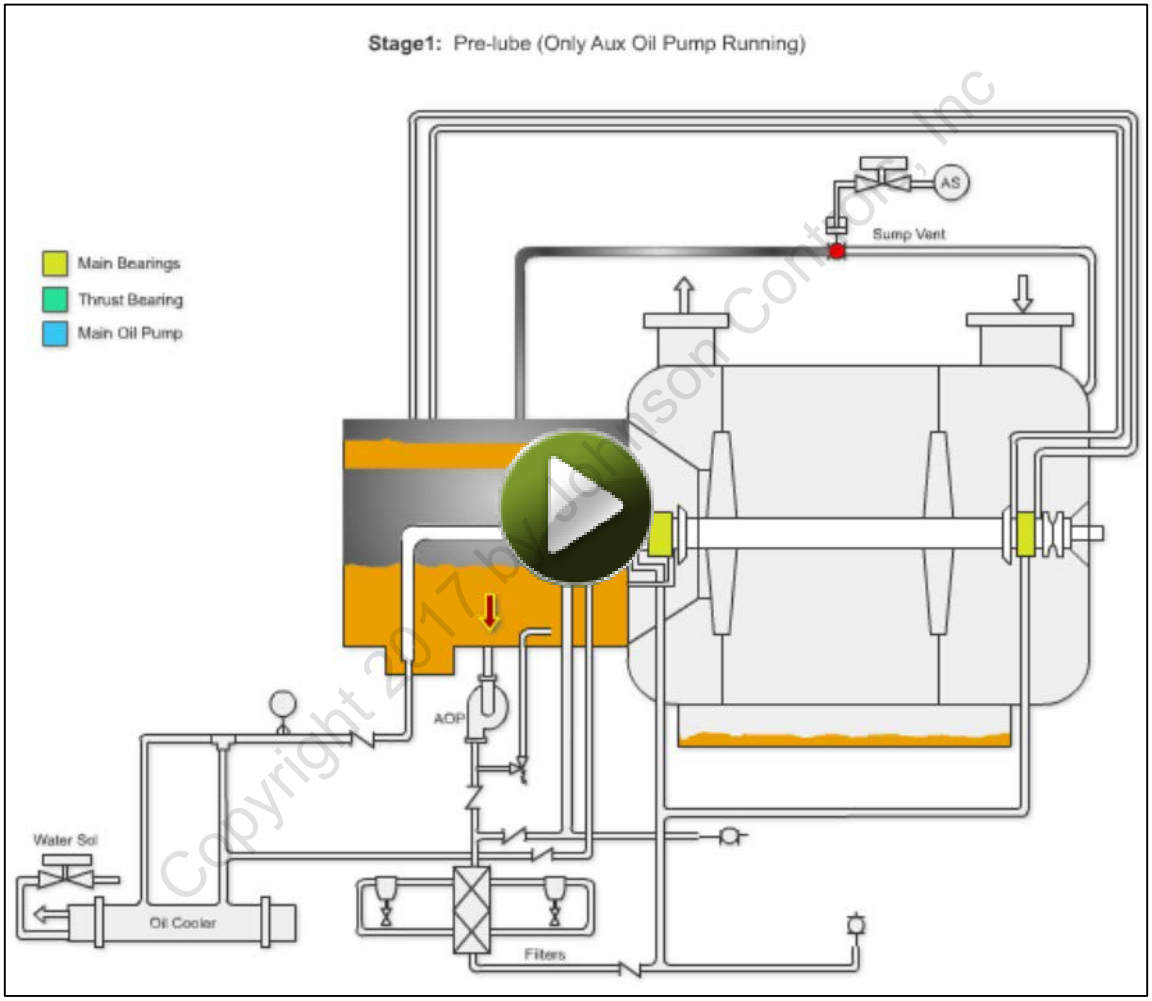

Copyright 2017 by Johnson Controls, Inc

Stage 2: Normal Run (Only Main Oil Pumps Running and ~ 30 Minutes After Main Oil Pump Has been Running)

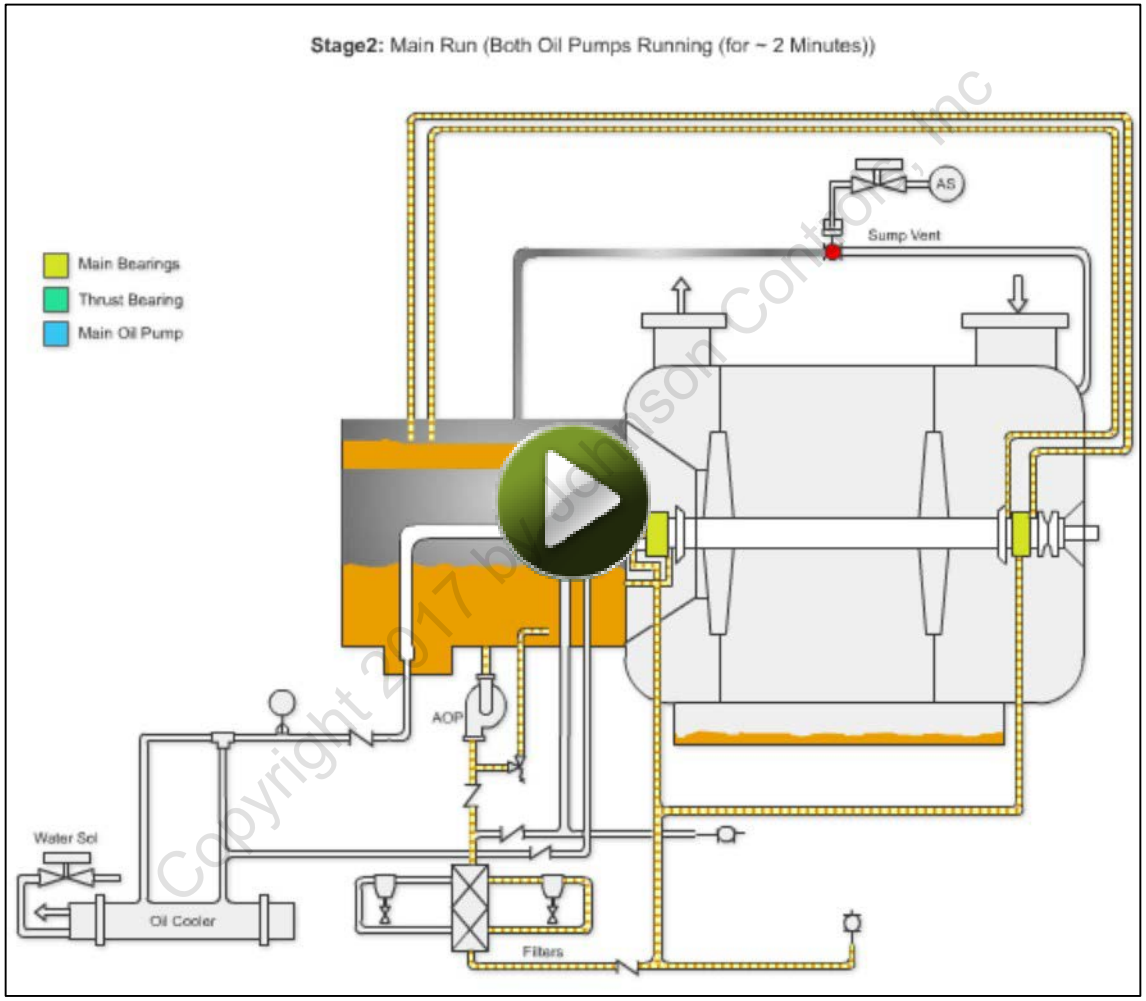

Stage 3: Shutdown (Both Oil Pumps Running)

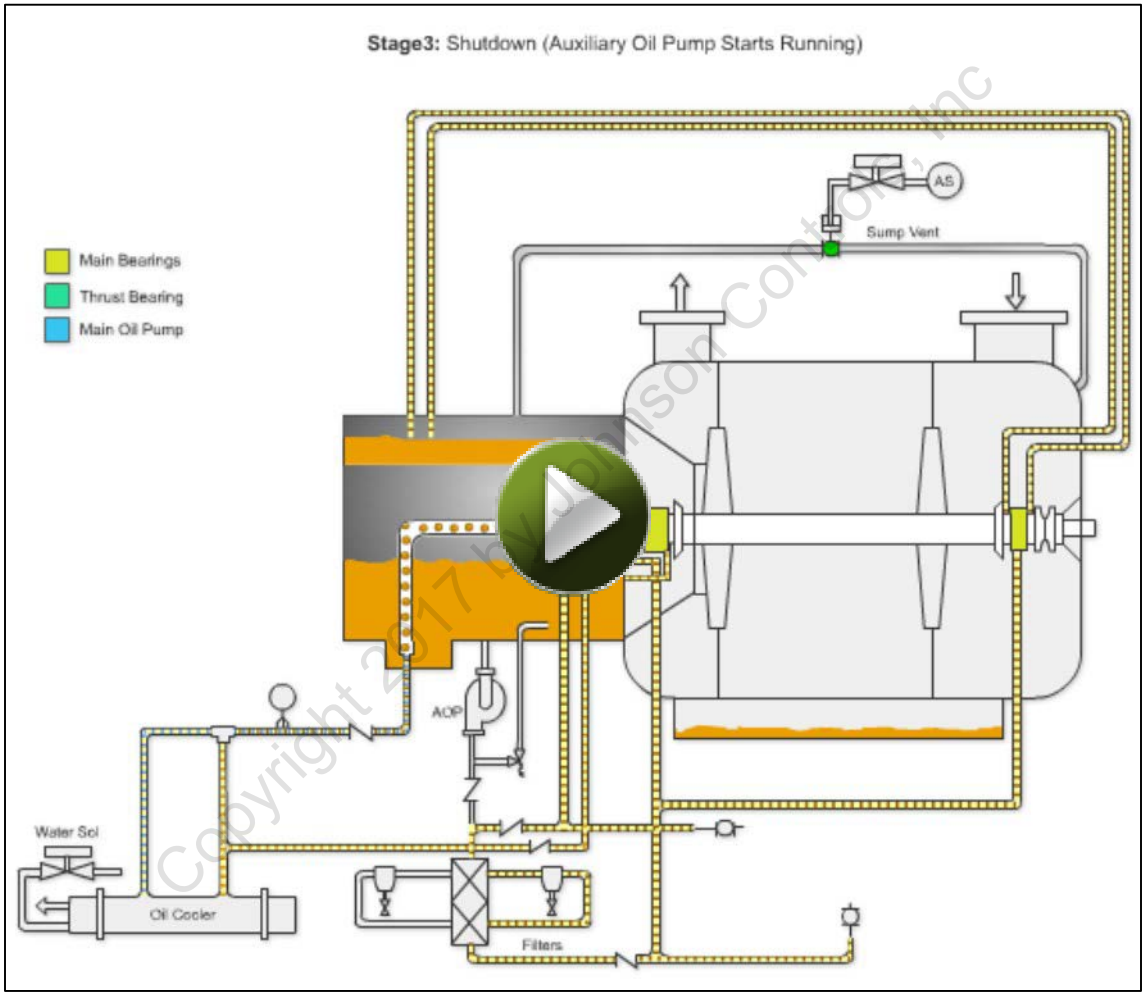

Stage 4: Post-lube (Only Auxiliary Oil Pump Running)

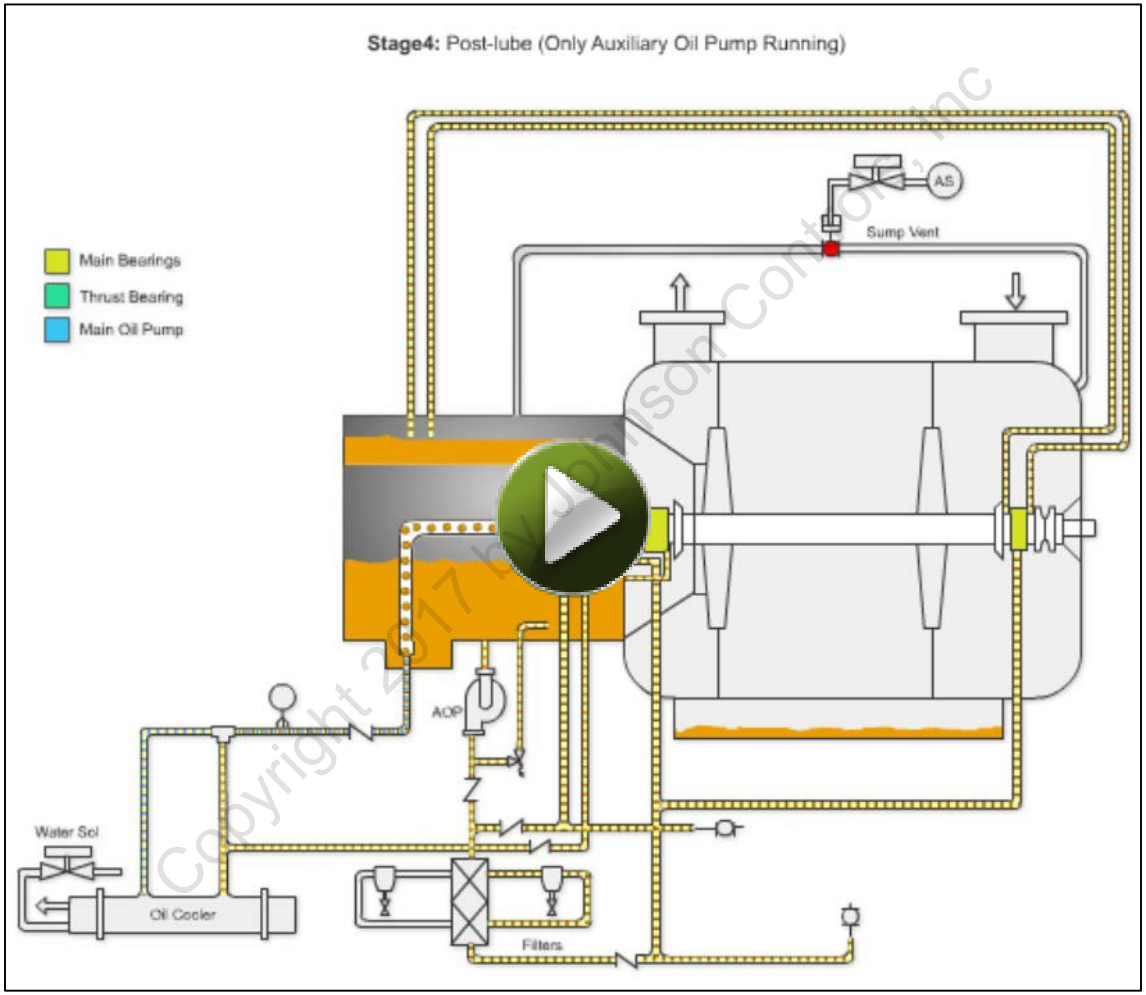

Discussion: Oil Supply During Power Failure

In case of a power failure, is there any provision to supply oil to the lubrication system?

Copyright 2017 by Johnson Controls, Inc



Components Supporting the Lubrication System

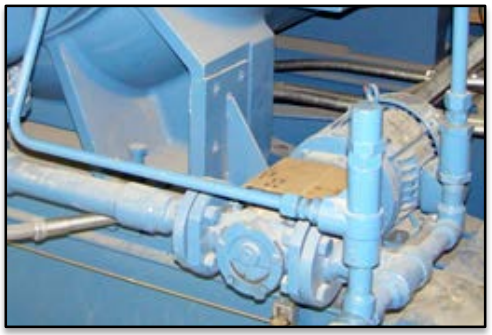

Valves

Used for controlling the quantity of oil flow through the system



Mist Eliminators

Minimize the opportunity for oil to be carried out with the vent flow through the line

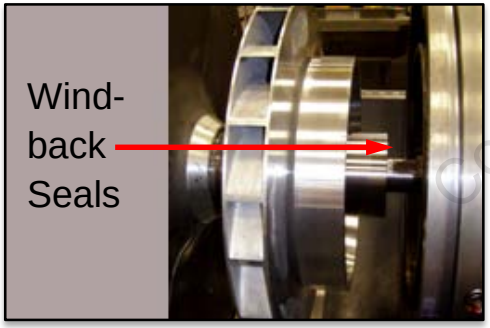

Wind-back Seals

Prevent oil from entering the compressor casing

Copyright 2017 by Johnson Controls, Inc

Valves

Drain Service Valve



- Located in the oil sump
- Used for adding and removing oil

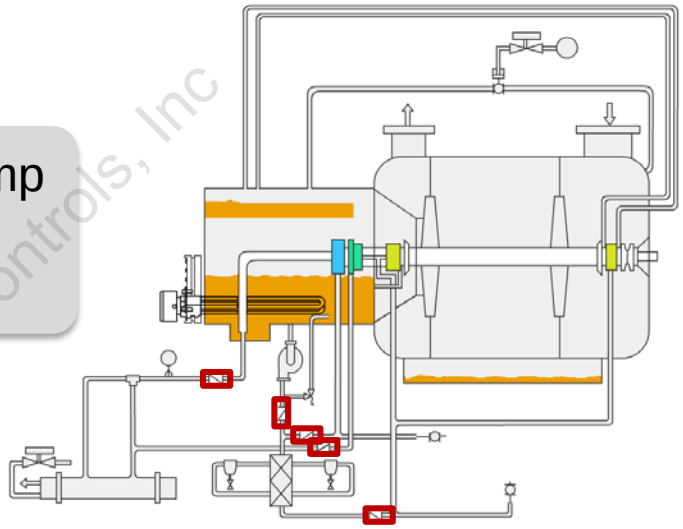

AMOT Valve

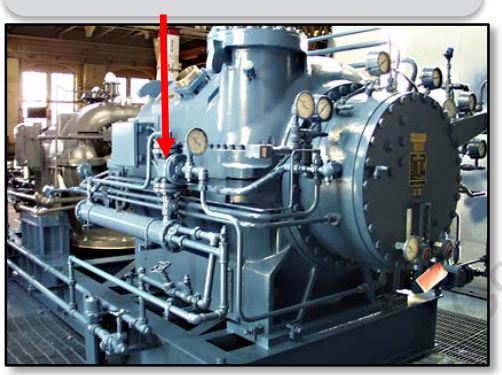

- Located next to the oil cooler
- Maintains proper oil supply temperature
- Regulates the amount of oil flowing through and around the oil cooler

Copyright ©2017 by Johnson Controls, Inc

Mist Eliminators

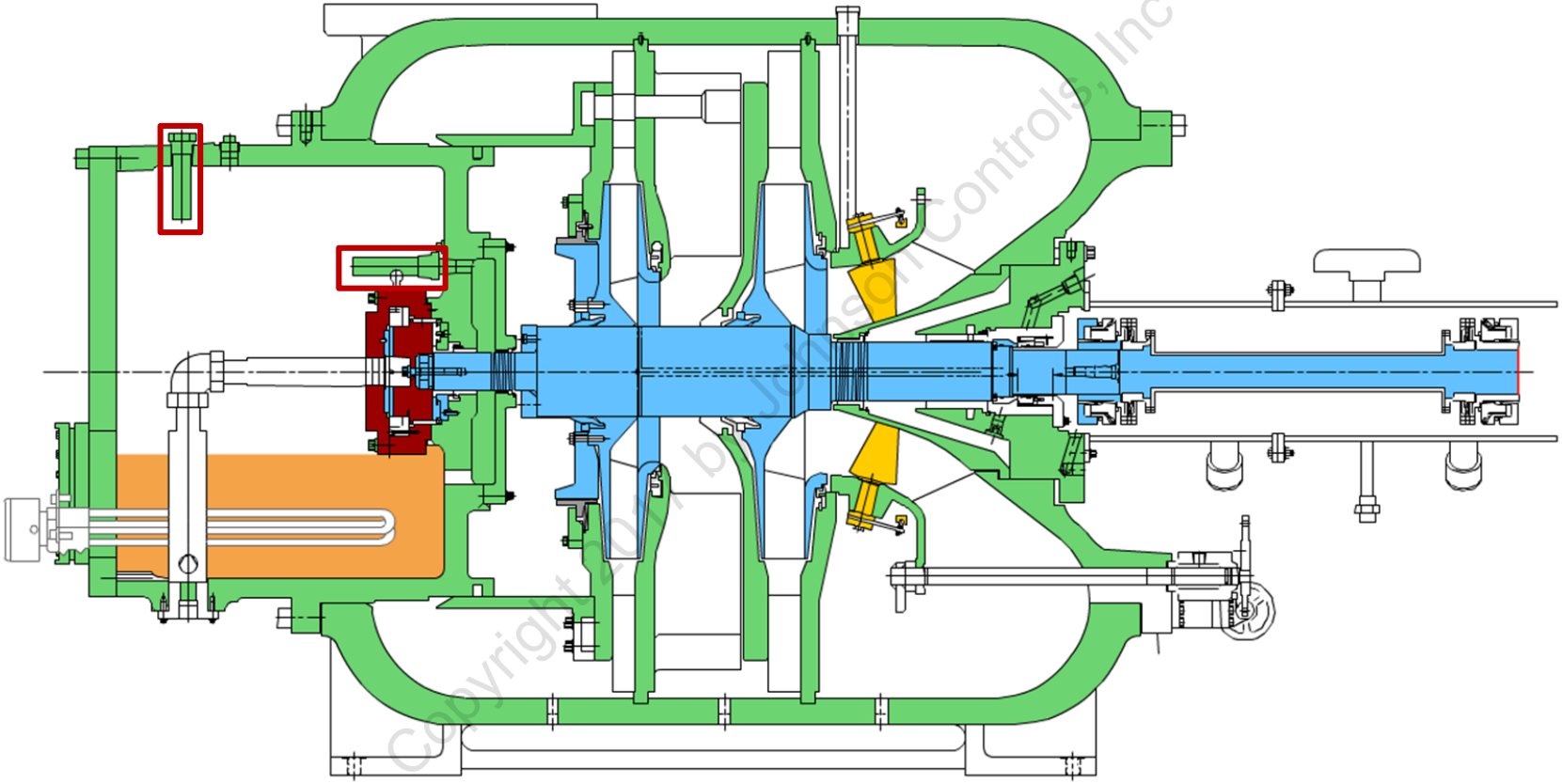

Mist Eliminators (Cont'd.)

- Minimize the opportunity of oil from being pulled back into the compressor
- Installed inside the sump at the inlet of the external gas line
- There are two mist eliminators

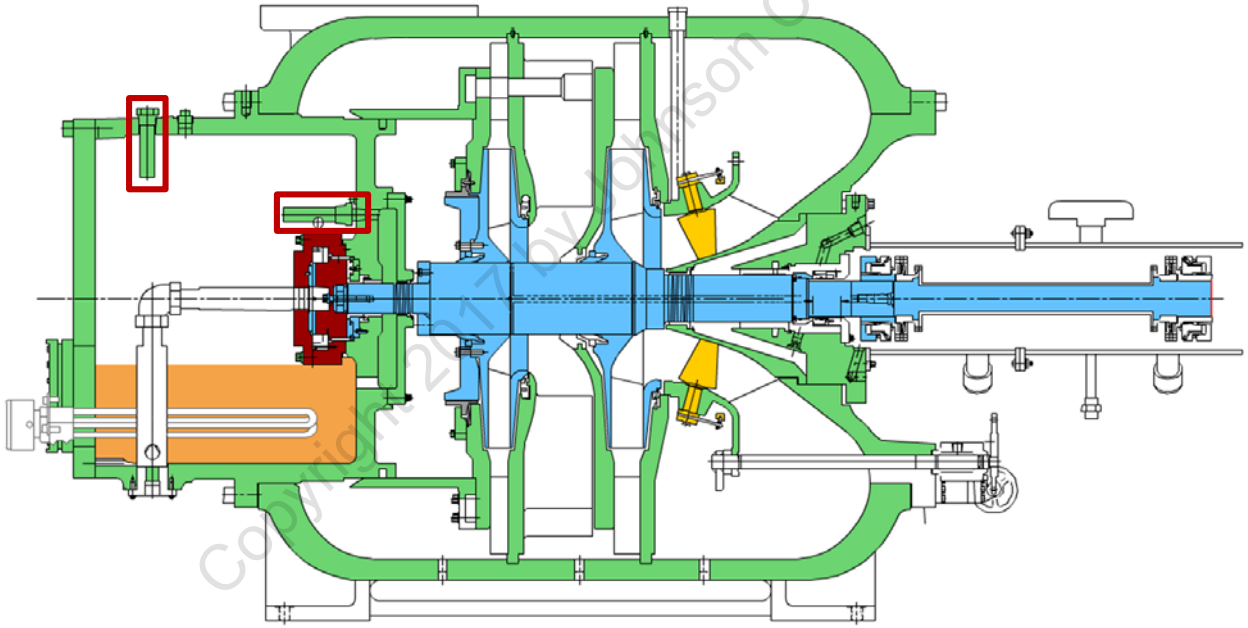

Copyright 2017 by Johnson Controls, Inc

Mist Eliminators (Cont'd.)

- Minimize the opportunity of oil from being pulled back into the compressor
- Installed inside the sump at the inlet of the external gas line
- There are two mist eliminators

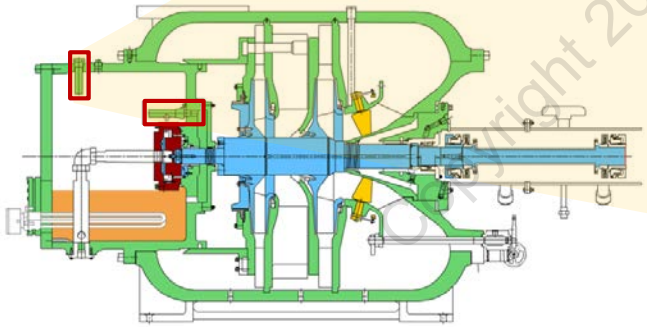

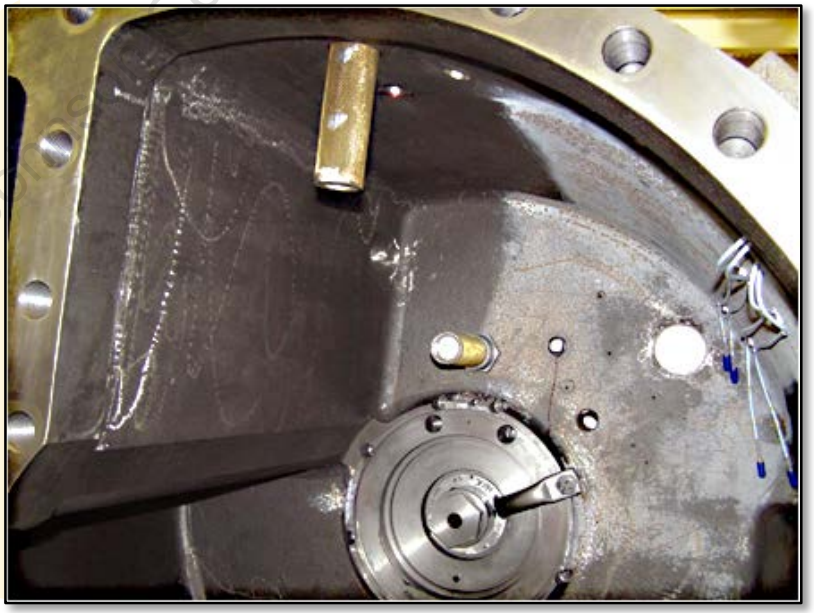

Copyright 2017 by Johnson Controls, Inc

Sump Venting System

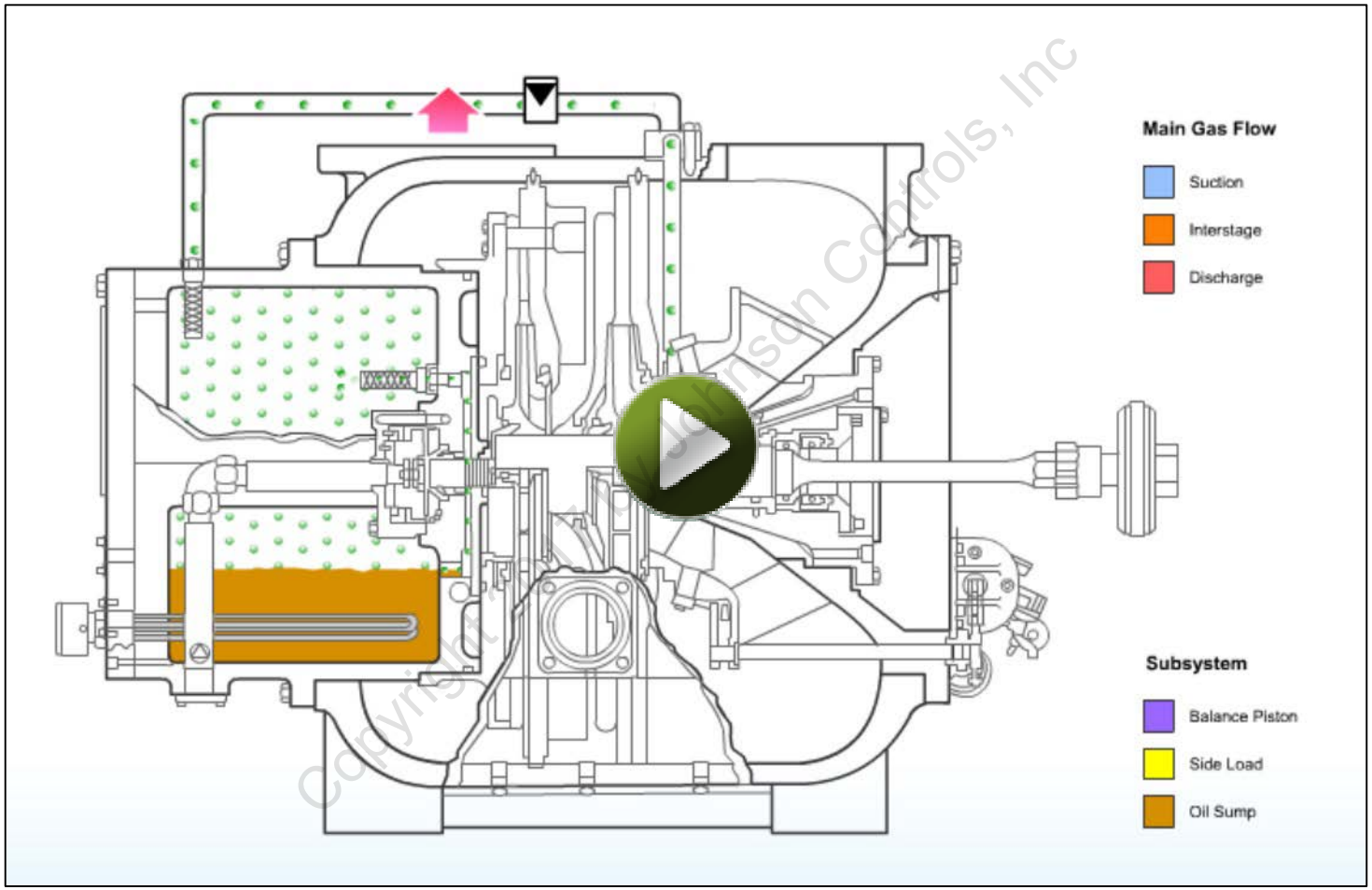

Copyright © 2011 Johnson Controls, Inc

Oil Seals—Wind-back Seals

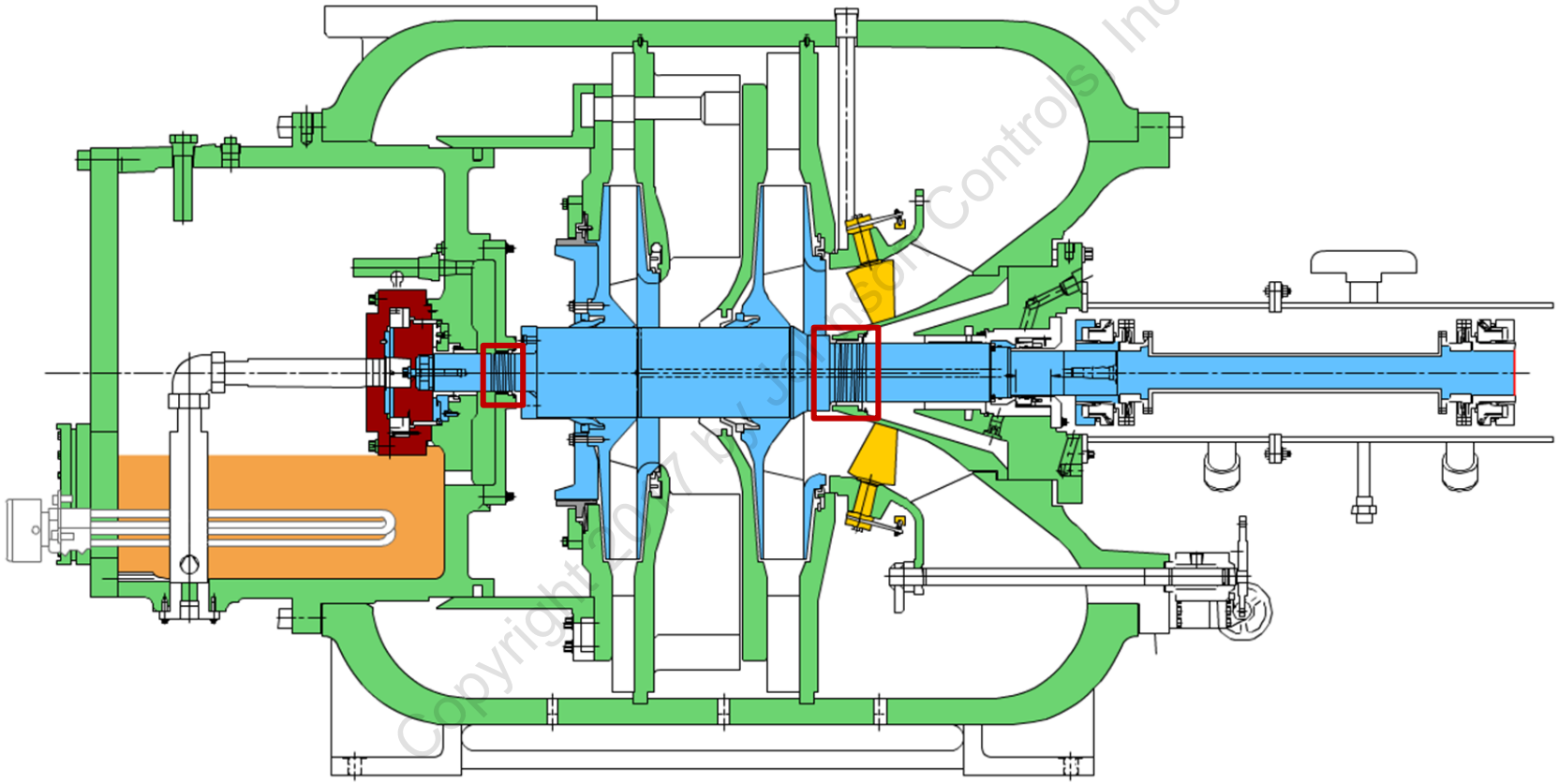

Oil Seals

- Located over the area of the main shaft
- Control oil from entering the compressor casing
- Prevent oil from leaking from the main bearing into the impellers

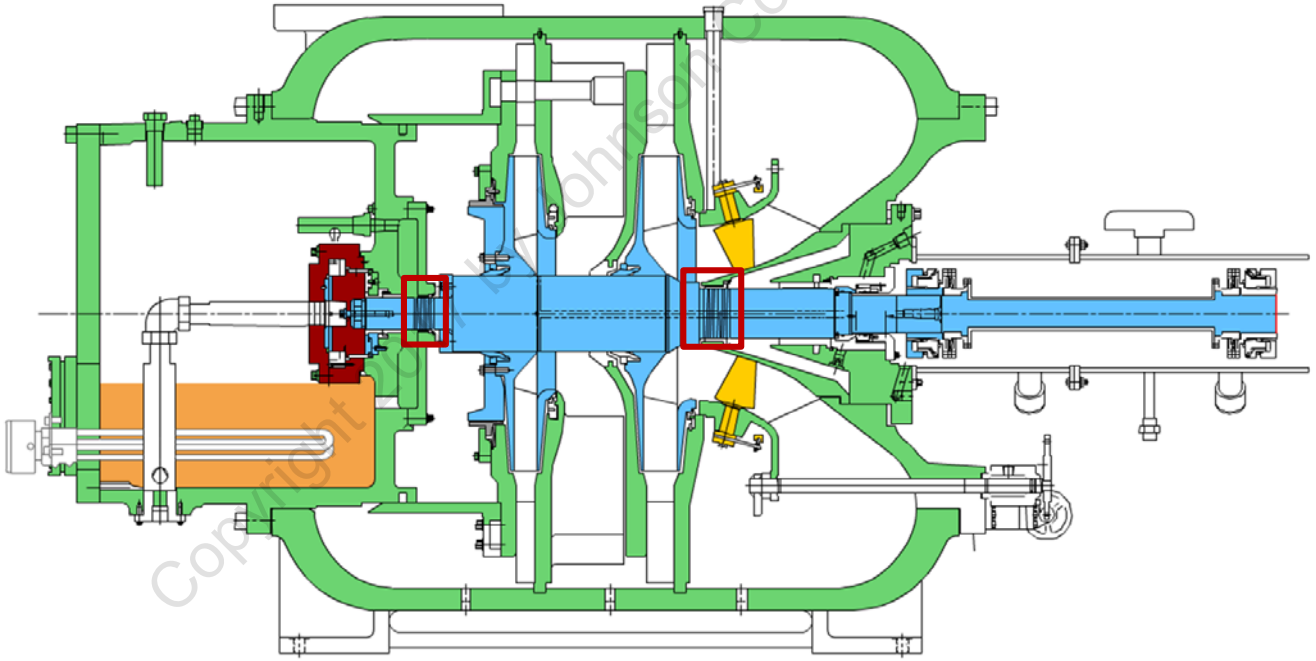

Copyright © Johnson Controls, Inc

Oil Seals (Cont'd.)

- Located over the area of the main shaft
- Control oil from entering the compressor casing
- Prevent oil from leaking from the main bearing into the impellers

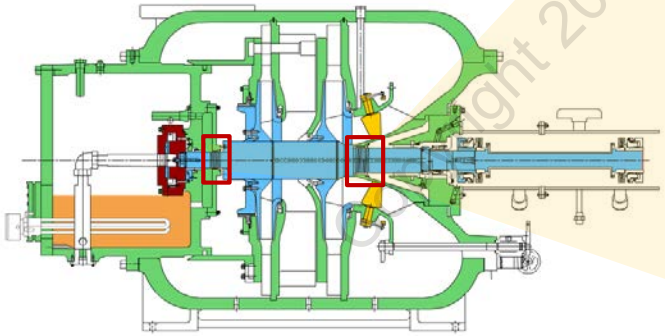

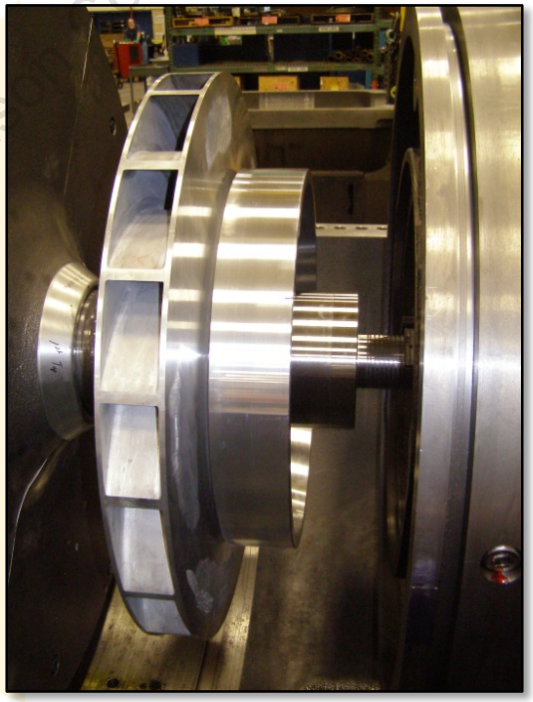

Copyright 2017 by Johnson Controls, Inc

Oil Seals—How Do They Work?

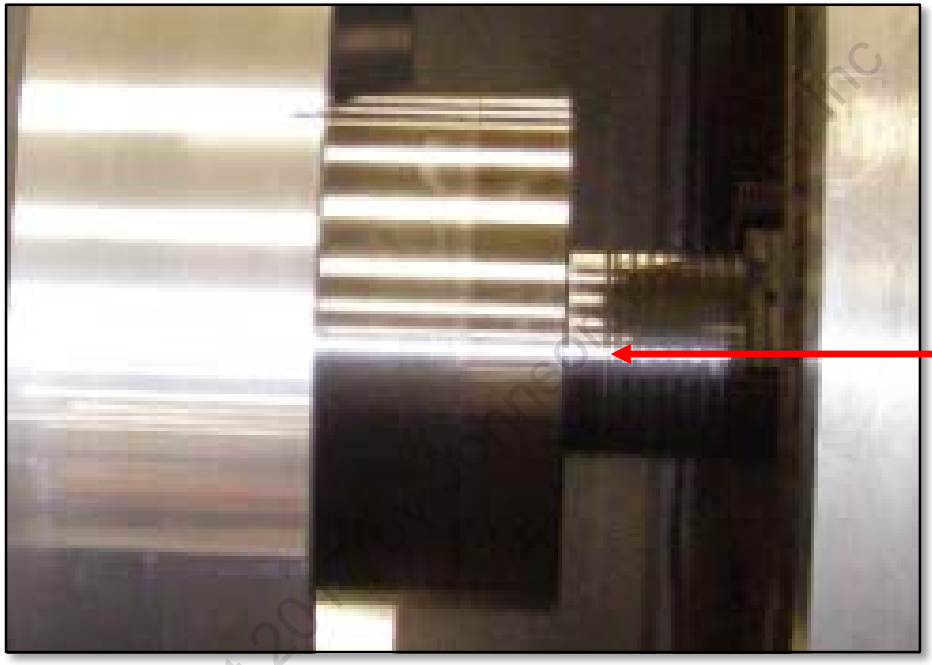

Copyright 20

- Permit a slight gas leakage (buffer gas) to prevent oil leakage
- Front seal—pressurized by the internal casing pressure
  Rear seal—pressurized by the balance piston cavity

Construction Material

As a technician, you need to check the following to ensure smooth functioning of the compressor. How do you do it?



Oil Level

Sight Glasses



Oil Temperature

Temperature Probes



Oil Pressure

Pressure Indicators

In the old machines, all the probes were on the oil pump. In the new machines, most of this information is available directly on the HMI display.

Copyright 2017 by Jo... Controls Inc

Sight Glass

Function: Show(s) the oil level in the oil sump

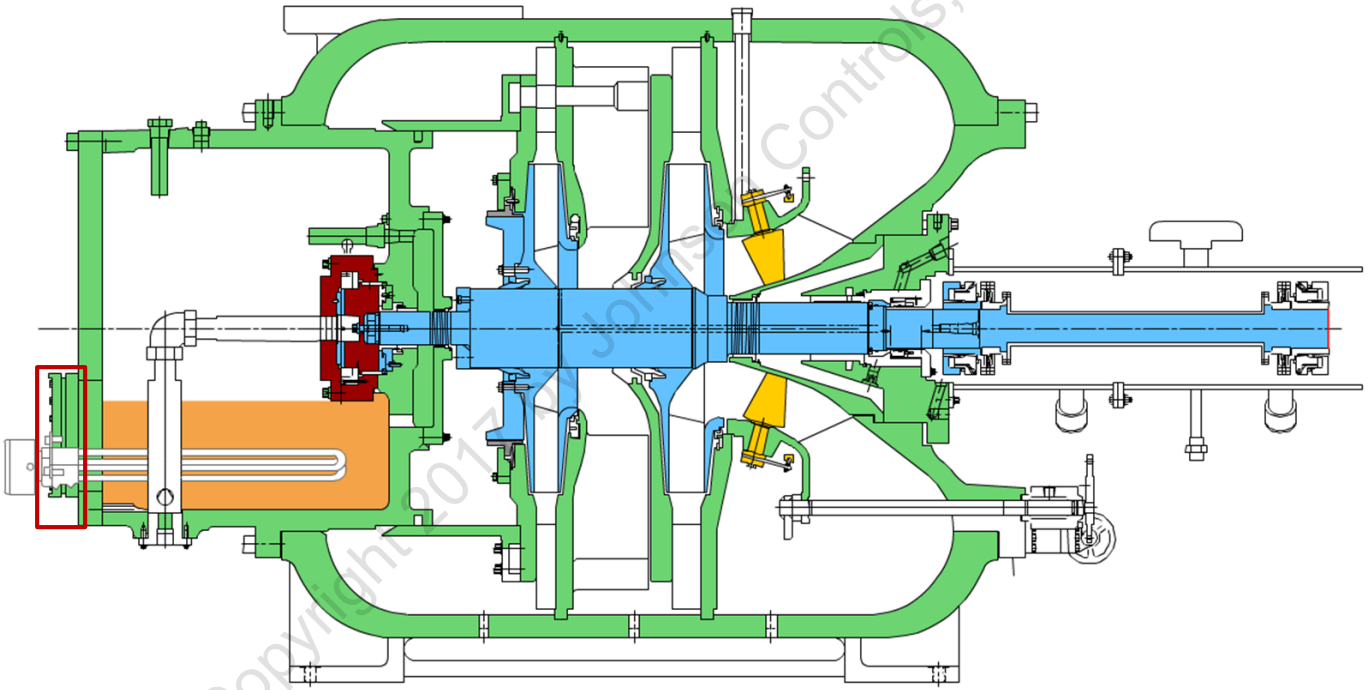

Copyright 2017 Johnson Controls, Inc

Sight Glass (Cont'd.)

Function: Show(s) the oil level in the oil sump

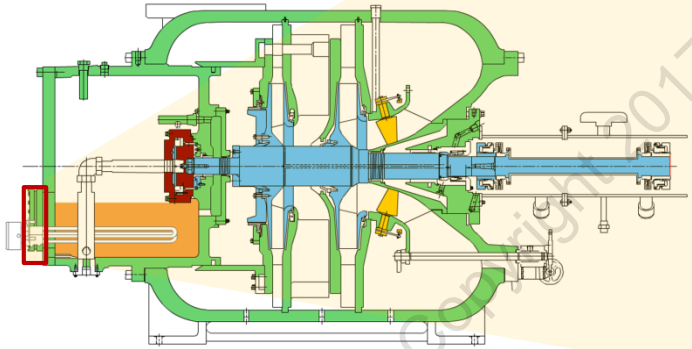



Copyright 2017 by Johnson Controls, Inc

Temperature Probes

- Measure the temperature of the oil
- Located in the oil sump, oil line leaving the thrust bearing, and in to the main oil line to the filter(s) and the bearings
- Measure the oil returning from the compressor to the sump

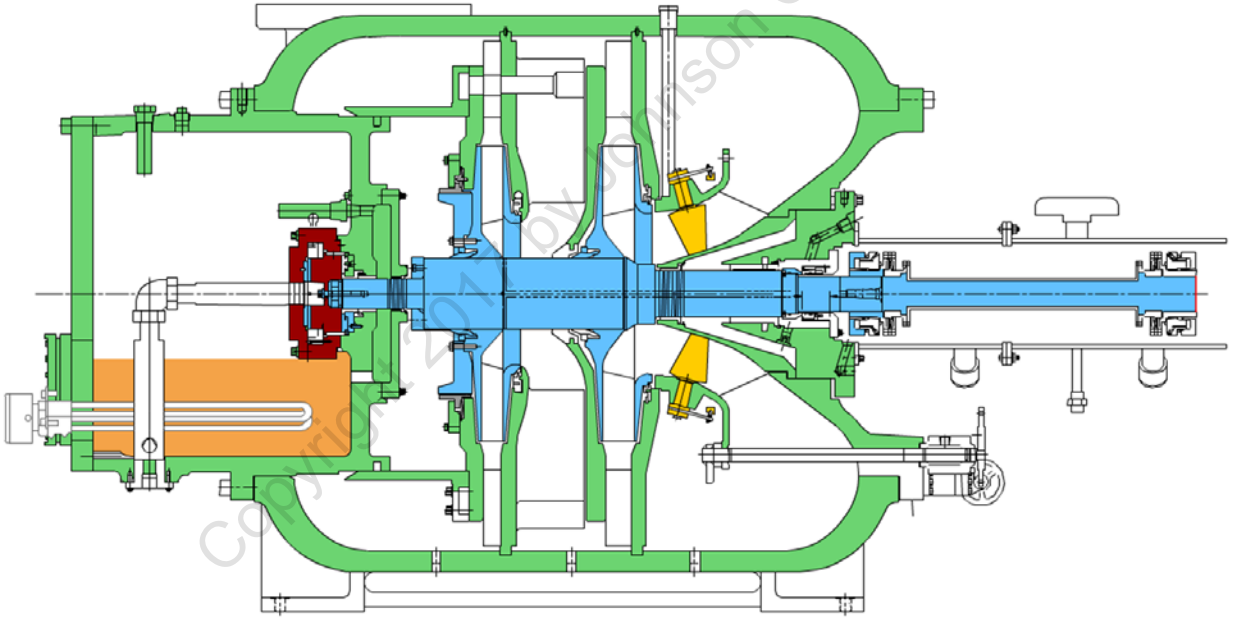

Copyright © 2014 by Johnson Controls, Inc

Temperature Probes (Cont'd.)

- Measure the temperature of the oil
- Located in the oil sump, oil line leaving the thrust bearing, and in to the main oil line to the filter(s) and the bearings
- Measure the oil returning from the compressor to the sump

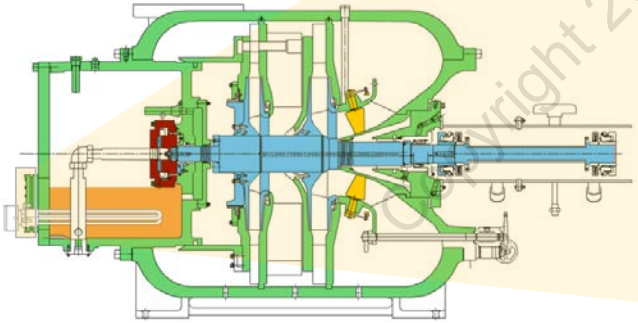



Copyright 2017 by Johnson Controls, Inc

Pressure Gauges

- Check the pressures in lubrication system
- Located in the oil line leaving the thrust bearing, in main oil pump supply line, and in the balance piston chamber

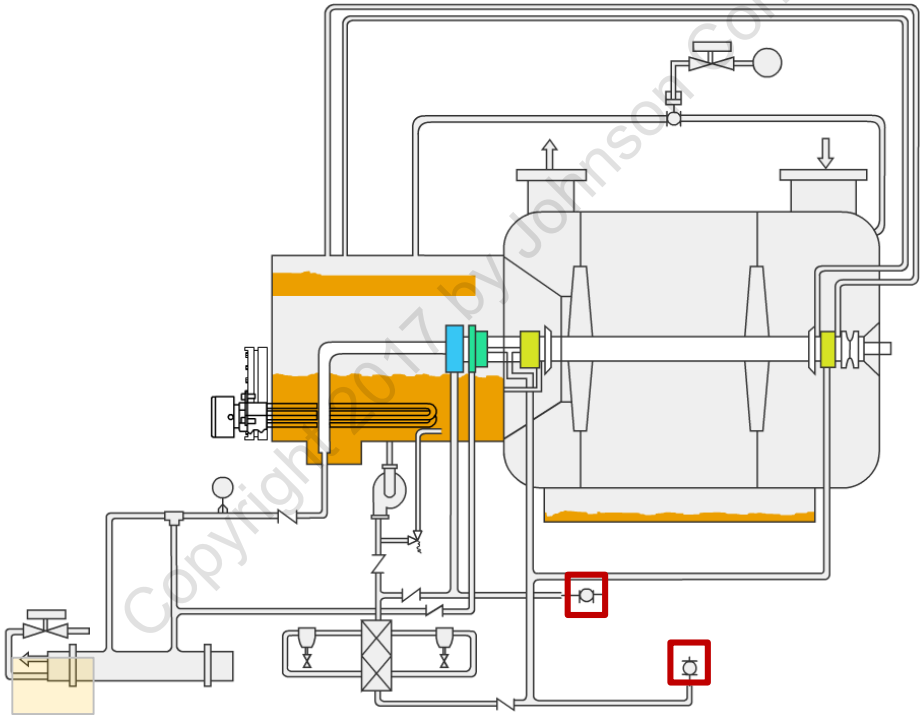

Copyright 2017 by Johnson Controls, Inc

Pressure Gauges (Cont'd.)

- Check the pressures in lubrication system
- Located in the oil line leaving the thrust bearing, in main oil pump supply line, and in the balance piston chamber

Copyright Material by Johnson Controls, Inc

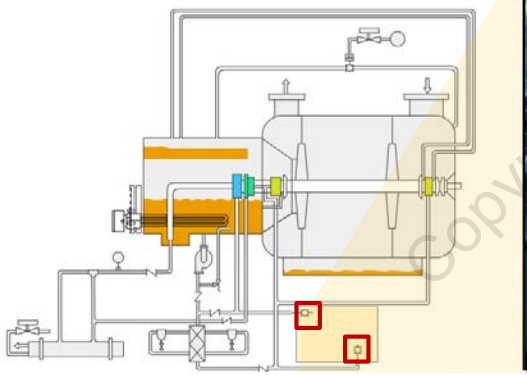





Our Policy prohibits printing. Save GREEN.

Discussion: Permissible Oil Temperature and Pressure

What are the permissible ranges for the oil temperature and pressure?

- The temperature of the oil leaving the thrust bearing should not exceed 150 °F. The main oil supply temperature should be 100-120 °F.
- The temperature of the oil supply to the bearings should not exceed 120 °F/125 °F
- The oil filter pressure differential should not fall below 80 percent of its normal value
- The regulating valve should maintain a seal pressure of 2 to 5 psi at minimum suction pressure
- Check the balance piston pressure gauge readings to ensure that they are in the range permissible for the stage
- The discharge temperature should be within the permissible range (talking point).



Copyright 2017 Johnson Controls, Inc

Oil Return System

What are the function(s) of the oil return system?

Returns oil that gets collected in the evaporator to the oil sump.

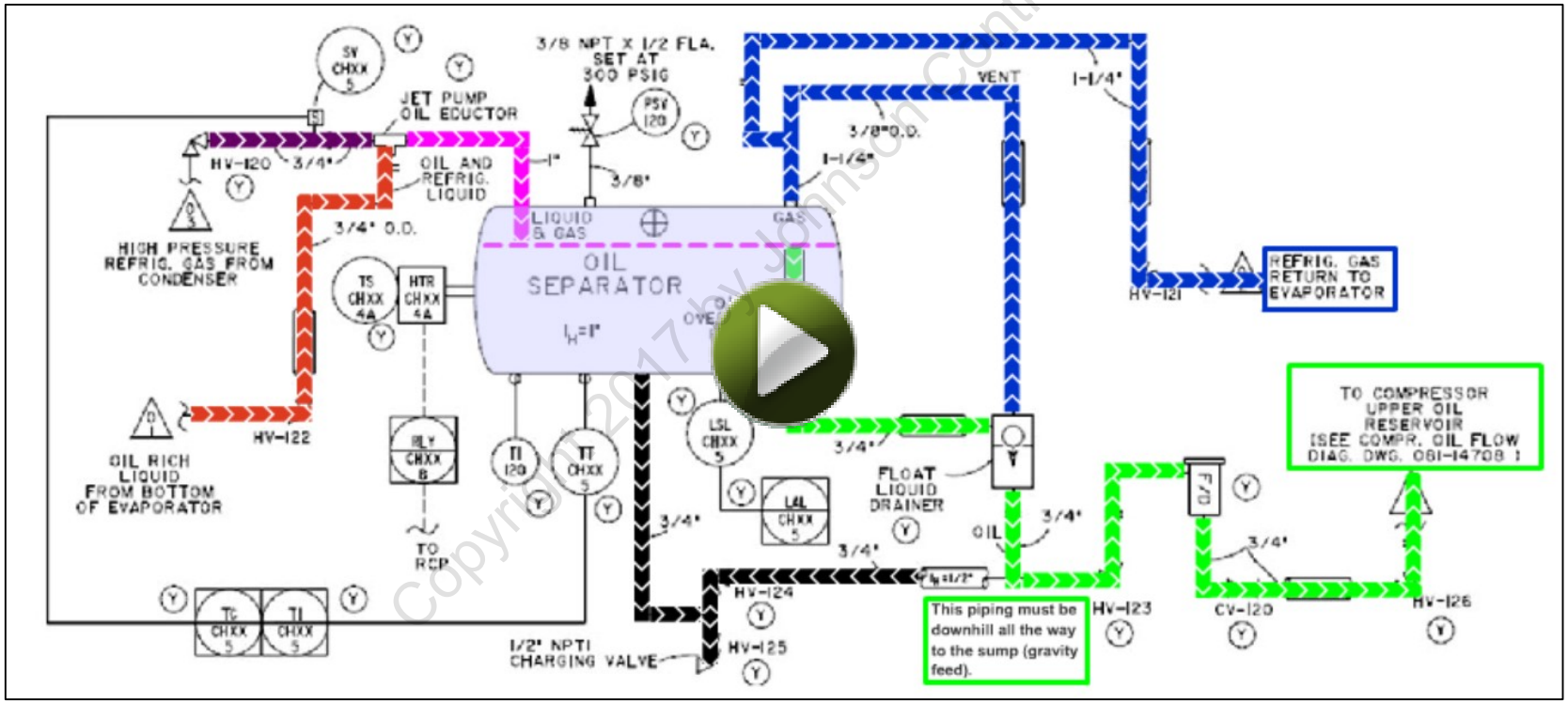

Copyright 2017 by Johnson Controls, Inc

Oil Return System—Points to Remember

1. Oil heaters are thermostatically controlled.
2. There is an “oil level float switch,” which will shut off electricity to the oil heaters if the oil level is too low. Uncovered oil heaters can be “burnt out” and ruined.
3. The “adjustable” valve at the bottom of the evaporator controls the amount of liquid mixture entering the oil still tank. During commissioning, this should be set to 1 turn open to start with and can be opened more, as required, to maintain a steady level in the tank.
   i. Too much flow to the tank can cause the temperature in the tank to drop and the “flashing” off of the refrigerant to slow down. Excess flow can also cause the non-separation of the mixture and it can allow this mixture to go through the “float” section and enter the compressor oil sump where it can cause “foaming” in the oil sump.
   ii. Too little flow of liquid to the tank can cause the level to be too low and cause the “low level” float switch to open and shut the heaters off.
   iii. At the bottom of the tank, there are pipes and fittings to allow the tank to be fitted when being commissioned or drained for service.

Copyright 2017 by Johnson Controls, Inc

Any Questions?



Copyright 2017 by Johnson Controls, Inc

Key Takeaways

In this topic, you learned that:

- The quality of oil determines the efficiency of the lubrication system
- There are four main points of the lubrication system: oil sump and internal pump; Auxiliary Oil Pump; pressure relief valve; and lubrication filters and piping
- Everything connected with the lubrication system either starts up or finishes in the oil sump
- The oil return system returns the oil collected in the evaporator to the oil sump
- The returning oil from the bearings goes through the oil cooler and then back to the sump
- Regularly checking the oil level, temperature, and pressure ensures smooth functioning of the machine



Copyright 2017 by Johnson Controls, Inc

M Compressor_Operation and Controls



Copyright 2017 by Johnson Controls, Inc.

Topic Objectives

M Compressor Basics

1. Introduction
2. Components
3. Lubrication System
4. Operation and Controls

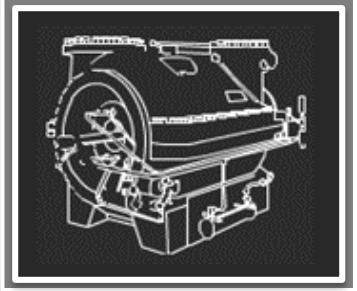

In this topic, you will review and learn about:

- Chiller operation
- Features and parts of the HMI/control panel
- Function(s) of controls on the control panel system screens

Copyright 2017 by Johnson Controls, Inc

General Operating Sequence

- Unit Not Operating
- System Startup
- Capacity Control Operation
- System Shutdown
- Anti-recycle Operation

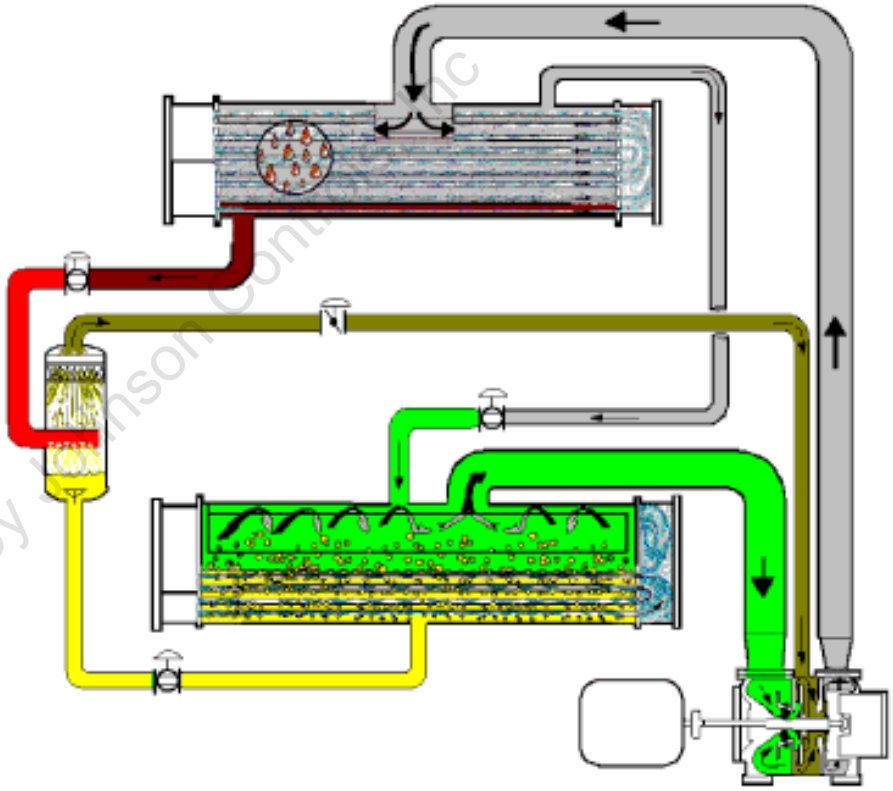

Copyright 2017 by Johnson Controls Inc

Refer to the manual provided and review the general operating sequence.

General Operating Sequence—Unit Not Operating

- Unit Not Operating
- System Startup
- Capacity Control Operation
- System Shutdown
- Anti-recycle Operation

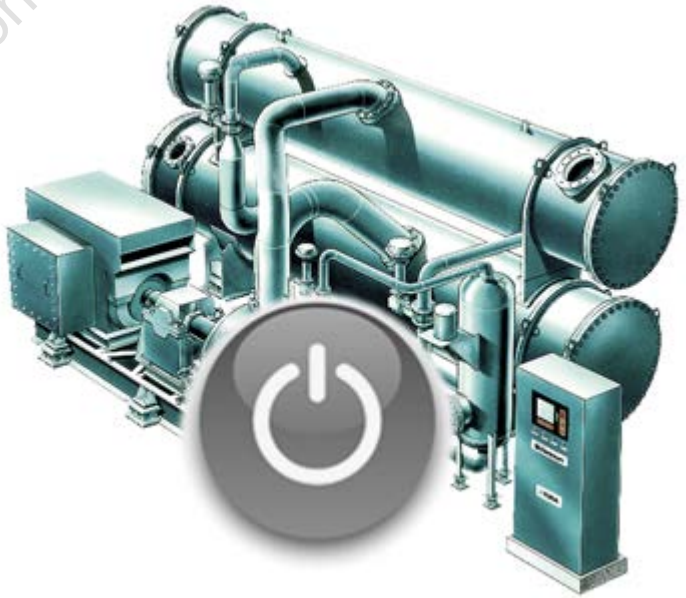

Copyright 2017 by Johnson Controls, Inc

Unit Not Operating

- Control power is available to the control panel
- Capacity controls are disabled
  - PRVs and interstage side load valves are closed
  - Subcooler, intercooler, and hot gas bypass valves are open
- Compressor sump oil heaters are thermostatically controlled above saturation



Copyright 2017 by Johnson Controls, Inc

Danger

Only apply auxiliary control voltage to the chiller when the oil sumps have been filled with oil. Uncovered oil heater assemblies will produce high temperatures and destroy compressor oil sump components.

General Operating Sequence—System Startup

- Unit Not Operating
- System Startup
- Capacity Control Operation
- System Shutdown
- Anti-recycle Operation

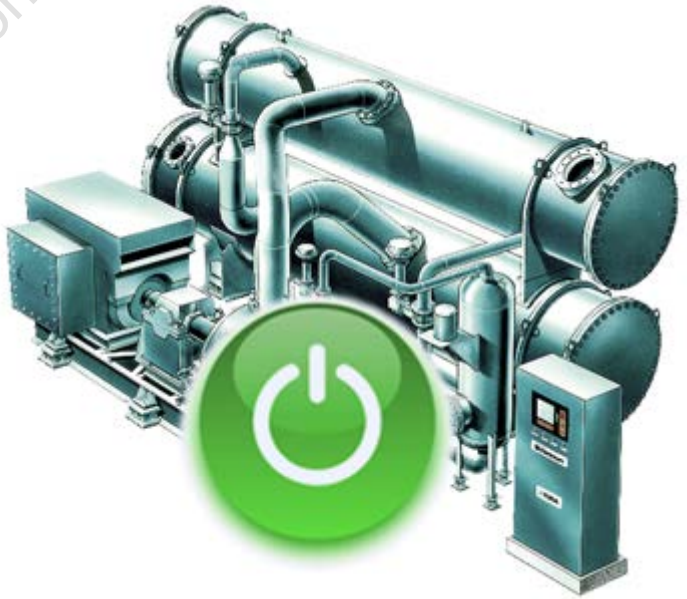

Copyright 2017 by Johnson Controls, Inc

System Startup Procedure

Check	Safety Logic
Clear	Previous Safety Trips or Power Failures
Press	Start Button

Copyright 2017 by Johnson Controls, Inc

System Startup Procedure (Cont'd.)

Check Safety Logic

- All safety logic should be satisfied with the exception of the **compressor and gear low oil pressure, chilled water and condenser water low differential pressure, and vibration monitor (optional)**
- **Oil pressure safeties** are bypassed until auxiliary oil pumps establish pressures
- **Differential pressure safeties** are bypassed until water pumps establish flows
- **Vibration monitor trip contacts** are bypassed at shutdown and until 2 seconds after the compressor motor has started

Clear Previous Safety Trips or Power Failures

Press Start Button

Copyright 2017 by Johnson Controls Inc

System Startup Procedure (Cont'd.)

Check Safety Logic

Clear Previous Safety Trips or Power Failures

- **Push CLEAR MESSAGE button** on display to clear previous safety trips or power failures (if any)
- A status indicator box will display **SYSTEM READY TO START**





Motor must remain off for sufficient time to cool down if chiller has been recently started and shut down.

Press Start Button

Copyright 2017 by Johnson Controls, Inc

System Startup Procedure (Cont'd.)

Check	Safety Logic
Clear	Previous Safety Trips or Power Failures
Press	Start Button

- **Local Start**: Start sequence begins as soon as the operator pushes the **"START"** button.
- **Remote Start**: DCS CHILLER REMOTE START CONTACT must momentarily close to energize PLC and initiate the chiller start sequence.
- **System Reset** should be used to reset alarm messages.



Chilled and condenser water flows must be established by the customer's pump control system or manually by the operator within 25 seconds after the start is initiated.

Copyright 2017 by Johnson Controls, Inc

System Initialization

1. Auxiliary Oil Pumps Start

- With the **INITIATE START** signal, the chiller controls start the compressor and gear auxiliary oil pumps
- Compressor and gear auxiliary oil pump LED symbols change from green to red



If pump fails to start within 2 seconds after PLC output is energized, an alarm signal is transmitted to the display for indication and recording.

- The compressor pre-rotation vanes are opened to their minimum position necessary to prevent **surging** during the initial acceleration at startup

Copyright 2017 by Johnson Controls, Inc

System Initialization (Cont'd.)

2. Water and Oil Pressure Signals and Switches Checked

- Five seconds before the end of pre-lube time (30 seconds), the following are checked:
  - Compressor low oil pressure signals
  - Gearbox low oil pressure signals (if gearbox is present)
  - Low pressure cutout switches
  - Chilled water low differential pressure cutout switch
  - Condenser water low differential pressure cutout switch



If minimum oil pressures are not established, startup is prevented and an alarm signal is transmitted.

Copyright 2017 by Johnson Controls, Inc.

System Initialization (Cont'd.)

3. Compressor Drive Motor Start Control Relay Energized

- At the end of the pre-lube time, the compressor drive motor is energized to close its contact and energize the motor starter control circuit



If starter auxiliary (start) contact does not close within the programmed time after the start relay is energized, an alarm signal will be transmitted to the DISPLAY for indication and recording and the start relay will be de-energized.

- At 2 seconds (adjustable timer, if enabled) after the starter auxiliary (start) contact closes, the vibration monitor trip bypass contact is opened to allow vibration trips to occur

Copyright 2017 by Johnson Controls, Inc

System Initialization (Cont'd.)

4. Auxiliary Contact Input to Chiller Panel Established

- An auxiliary contact from the starter run (full voltage) contactor is input to the chiller control panel PLC to operate the following:
  - Pre-rotation vanes and hot gas bypass valve begin to ramp open/closed at a predetermined rate
  - Compressor oil heaters de-energize
  - Auxiliary cooling water solenoid valve energizes
  - Intercooler level control valve LCV-116 starts ramping closed



Auxiliary pump motors is restarted and an alarm signal is transmitted to the DISPLAY for indication and recording whenever the gearbox or compressor shaft pump oil pressure falls below the auxiliary oil pump control logic setting.

Copyright 2017 by Johnson Controls, Inc

System Initialization (Cont'd.)

5. Compressor Sump Vent Solenoid Valve Energized

- 20 seconds after the compressor shaft oil pump maintains sufficient pressure for a 100 second time period, the compressor sump vent solenoid valve is energized
- Sump vent ball valve slowly opens at a rate determined by the setting of the needle valve located in the air supply line upstream of the solenoid valve



The needle valve must be adjusted so that the valve opens (very) slowly enough to prevent foaming in the compressor sump caused by too rapid a sump pressure reduction on startup.

Copyright 2017 by Johnson Controls, Inc

System Initialization (Cont'd.)

6. Oil Separator Heaters Energized

- 100 seconds after the motor starter auxiliary (run) contact closes, the oil separator heater(s) are energized
- When the oil temperature in the separator reaches approximately 100 °F/ 37.77 °C, the temperature control switch closes to actuate the solenoid valve in the high pressure gas supply line to the oil eductor
- The eductor pulls an oil-refrigerant mixture from the bottom of the evaporator and pushes it into the separator
- The refrigerant is boiled off and returned to the evaporator
- The oil level increases, as oil is added to the tank and flows out to the separator via a stand pipe
- The oil leaving the separator travels to the sump under gravity flow

Copyright 2017 by Johnson Controls, Inc

System Initialization (Cont'd.)

7. Ramp-up

- Five minutes after the motor starter auxiliary (run) contact closes, the subcooler level control valve begins to ramp closed to allow liquid refrigerant to accumulate in the subcooler
- Ten minutes after the motor starter auxiliary (run) contact closes:
  - Interstage valve begins to ramp open to reduce the pressure in the intercooler
  - Interstage liquid injection solenoid valve is energized



The sideload/interstage valve start delay, subcooler level control start delay, and the economizer level start delay are all programmable at typically 10, 5, and 6 minutes respectively.

Copyright 2017 by Johnson Controls, Inc

System Initialization (Cont'd.)

8. Capacity Controls Start Operating

- Capacity controls operate to control chiller capacity in response to chilled water outlet temperature

Copyright 2017 by Johnson Controls, Inc

Ramp-up of Capacity Controls

Ramp-up feature is used to provide a gradual increase in chiller capacity during startup.

Capacity controls screen indicates which signals are currently in control of the pre-rotation vanes and valves during startup.

Copyright 2017 by Johnson Controls, Inc

Ramp-up of Capacity Controls (Cont'd.)

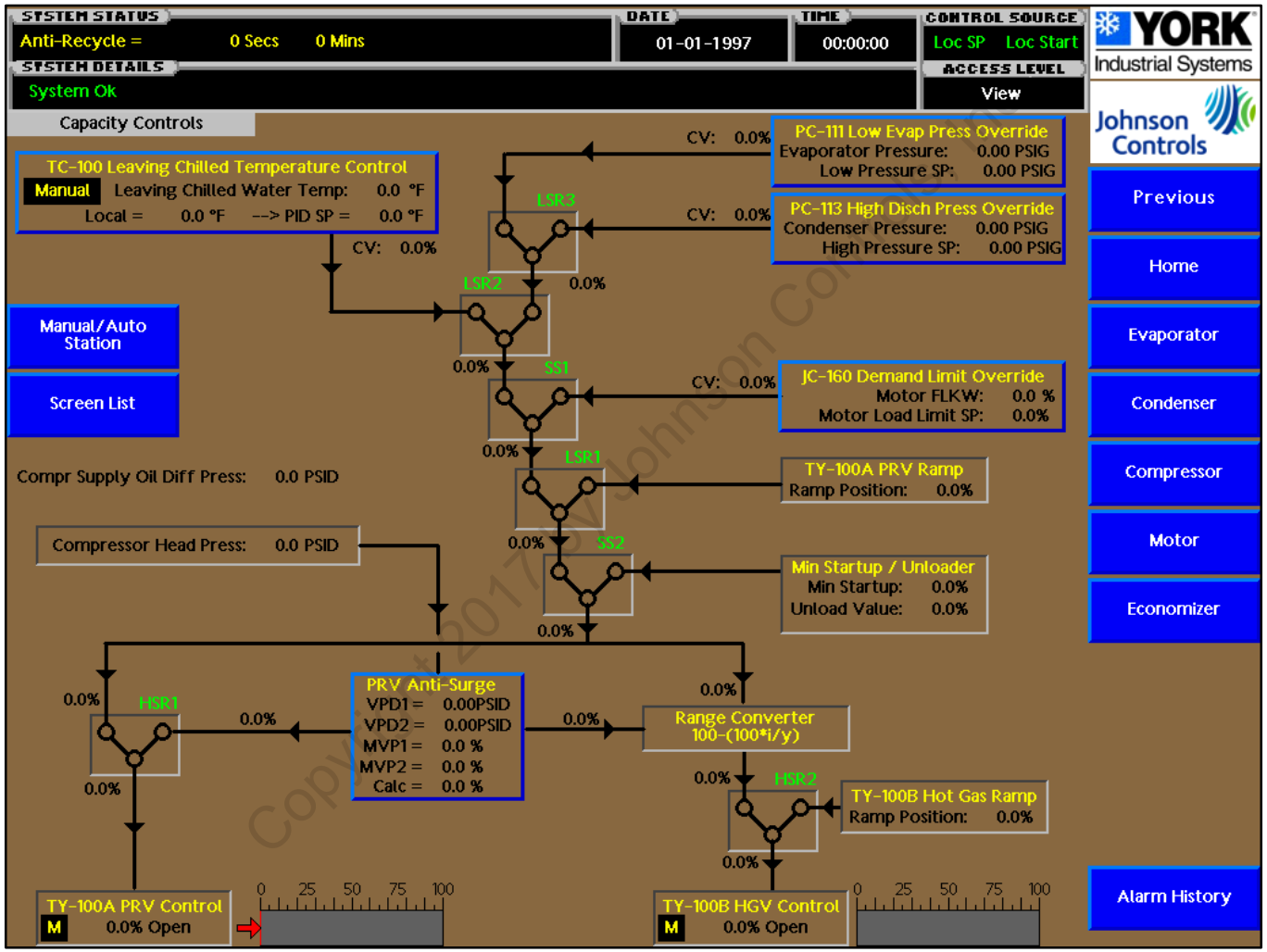

Our Policy prohibits printing. Save GREEN.

Ramp-up of Capacity Controls Operation

Chiller Unit is Off:

- Display indicates leaving chilled water TEMPERATURE CONTROL in manual mode
- TEMPERATURE CONTROL set point is equal to the leaving chilled water temperature and its output is equal to the PRV output signal



When does the display indicate it is not in TEMPERATURE CONTROL?

When the unit is shut down, during ramp-up and when the DEMAND LIMITER or the EVAPORATOR LOW PRESSURE OVERRIDE or the HIGH DISCHARGE PRESSURE OVERRIDE control signal is being used to control the capacity of the chiller.

Copyright 2017 by Johnson Controls, Inc

Ramp-up of Capacity Controls Operation (Cont'd.)

After the Compressor Motor Starts:

- PRV signal goes to the **Pre-rotation Vanes Minimum Startup Position** value
- **Hot Gas Ratio Calculation** output begins to decrease
- Motor current output signal increased to 100% after it drops below the **Demand Limit** set point
- Selector Switches (SS) change position to control the PRV based on the temperature control or demand limit
- Hot gas valve continues closing during the ramp-up period

Copyright 2017 by Johnson Controls, Inc

Ramp-up of Capacity Controls Operation (Cont'd.)

During Ramp-up:

- **Temperature Control** set point tracks the chilled water out temperature and its output will be driven to equal the PRV signal before High Selector Relay (HSR)
- PRVs continue to open at a rate determined by the **PRV Ramp** set point as long as the **Temperature Control** remains in the **Manual**

Copyright 2017 by Johnson Controls, Inc

Discussion: Ramp-up of Capacity Controls Operation (Cont'd.)

What happens in the following situations during ramp-up?

1. The capacity increases sufficiently to lower the chilled water outlet temperature to within the programmed TEMPERATURE CONTROLLER during ramp-up.	TEMPERATURE CONTROLLER tracks the PRV ramp until the vanes are 100% open, or until the leaving chilled water temperature is within 2 °F of the target set point.
2. The load is very low and the control is changed to automatic before the PRV RAMP CONTROL output signal has increased to the MIN PRV SIGNAL value.	Higher signal selector (HSR) selects the higher of the two inputs. The PRV signal decreases until it equals the capacity control signal.
3. The chilled water temperature continues to fall.	TEMPERATURE CONTROL output decreases causing the hot gas valve and PRV to move to whatever positions are required to maintain the chilled water at set point and provide stable compressor operation.

Copyright 2017 by Johnson Controls, Inc

Ramp-up of Capacity Controls Operation (Cont'd.)

After Ramp-up is Completed:

- PRV signal is at 100% and/or the TEMPERATURE CONTROL is changed to automatic
- TEMPERATURE CONTROL set point returns to whatever set point is stored in the control panel or changes to the PROGRAMMED remote set point (if available)



- Tracking and reset tieback controls disable the TEMPERATURE CONTROL during shutdown and ramp-up when other logic is in control and provide for a smooth transition to automatic control as required.
- Total ramp times for the PRV and hot gas valves are also shown. These values will change any time new ramp times are entered.

Copyright 2011 by Johnson Controls, Inc

Check Your Understanding—1

Which of the following are open when the chiller unit is not operating?

- ☐ PRVs
- ☑ Hot Gas Bypass Valve
- ☐ Interstage Control Valve
- ☑ Subcooler Level Control Valve
- ☐ All of the above

Copyright 2017 by Johnson Controls, Inc



Override Operation of Temperature Control

Maximum Current Demand Limiter

Evaporator Low Pressure Override

Copyright 2017 by Johnson Controls, Inc

Override Operation of Temperature Control (Cont'd.)

Maximum Current Demand Limiter

- When used, chiller output drops below the TEMPERATURE CONTROL output
- TEMPERATURE CONTROL:
  - Switches to automatic mode when chilled water temperature goes below desired set point
  - Output increases to open the vanes if load increases
- Vanes only open until SS-1 selects the lower demand limiting signal if demand limiter still in control
- Chilled water out temperature increases above the desired set point, and control returns to the manual mode when the load increases and the demand limiter prevents the vanes from opening
- TEMPERATURE CONTROL sets back to the automatic mode and its set point ramps down to the desired set point when the demand limiter has not been controlling for 10 seconds

Copyright 2017 by Johnson Controls, Inc

Evaporator Low Pressure Override

Override Operation of Temperature Control (Cont'd.)

Maximum Current Demand Limiter

Evaporator Low Pressure Override

- Control logic detects when Low Selector Relay (LSR) is selecting this control output signal to limit the vane opening and prevent a low evaporator pressure trip
- TEMPERATURE CONTROL put in manual mode and returns to automatic mode 10 seconds after the EVAPORATOR LOW PRESSURE OVERRIDE control in no longer controlling
- Tracking and tieback controls disable the TEMPERATURE CONTROL whenever other logic is in control to prevent its output from winding up due to the chilled water out temperature rising above the set point during the override operation

Copyright 2017 by Johnson Controls, Inc

General Operating Sequence—Capacity Control Operation

- Unit Not Operating
- System Startup
- Capacity Control Operation
- System Shutdown
- Anti-recycle Operation

Copyright 2017 by Johnson Controls, Inc

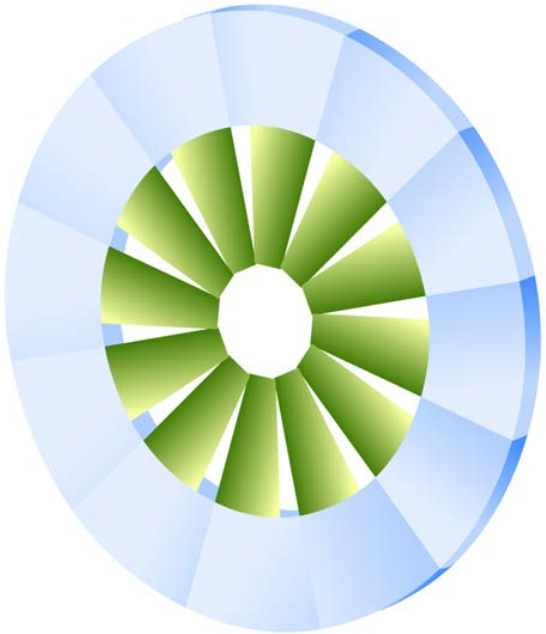

Capacity Control Operation

Capacity control algorithm seeks out the most efficient operation sensors register system conditions to infer the total cooling load and make adjustments to system components

Major Capacity Control Devices

- Pre-rotation Vanes
- Hot Gas Bypass Valve
- Subcooler Liquid Level Valve
- Intercooler Liquid Level Valve
- Interstage Gas Side Load Valve

Programmable Controls

- Manual Override (Manual/Automatic) Stations
- Leaving Chilled Water Temperature Control (Main Capacity Control)
- Maximum Power Demand Limiter
- Evaporator Low Pressure Override
- High Discharge Pressure Override
- Interstage Differential Pressure Control
- Anti-surge (Minimum PRV Position)
- Hot Gas Control
- Subcooler Level Control

Copyright 2017 by Johnson Controls, Inc.

Major Capacity Control Devices

Pre-rotation Vanes

- On startup, the PRV's are closed to reduce the starting load torque of the compressor. They are closed on shutdown to reduce backflow of high pressure gas from the condenser.

Hot Gas Bypass Valve

- A pneumatic control that opens on shutdown and maintains a minimum suction gas flow at low load conditions.

Copyright 2017 by Johnson Controls, Inc

Major Capacity Control Devices (Cont'd.)

Subcooler Liquid Level Valve

- Pneumatic control valve
- Maintain proper amount of sub cooling; makes a liquid gas seal at the condenser outlet
- Opens after shutdown allowing slow change in pressure between evaporator and condenser at shutdown
- Opens at startup and slowly closes

Intercooler Liquid Level Valve

- Controls the refrigerant liquid level in the intercooler to maintain a good liquid seal between the Flash gas in the top of the intercooler and the liquid to the evaporator.

Copyright 2017 by Johnson Controls, Inc

Major Capacity Control Devices (Cont'd.)

Interstage Gas Sideload Valve

- Remains closed for after startup to allow the subcooler level controller to establish a liquid level in the subcooler and then slowly opens until it reaches the position dictated by the capacity controls

Copyright 2017 by Johnson Controls, Inc

Programmed Capacity Control Functions

Manual Override (Manual/Automatic) Stations

- Allows the operator to manually control the PRVs, interstage valve, hot gas bypass valve, and subcooler level control valve

Leaving Chilled Water Temperature Control (Main Capacity Control)

- Provides an output signal which decreases as water temperature drops below set point to reduce the capacity of the chiller

Maximum Current Demand Limiter

- Uses the motor current input signal to limit capacity

Copyright 2017 by Johnson Controls, Inc

Programmed Capacity Control Functions (Cont'd.)

Evaporator Low Pressure Override

- Provides an output signal which decreases as the evaporator falls below a set point which is slightly below design. When a low evaporator pressure is sensed, the lower output signal is passed on by the LSR to override the capacity signal and keep the compressor pre-rotation vanes closed

High Discharge Pressure Override

- Decreases its output signal when its set point is exceeded. When a high condenser pressure is sensed, the lower output signal is passed on by the LSR to override the capacity signal and keep the compressor pre-rotation vanes closed

Interstage Differential Pressure Control

- Senses when the differential pressure across the intercooler is too low, and acts to close the interstage valve at differential pressures below the set point

Copyright 2014 by Johnson Controls, Inc

Programmed Capacity Control Functions (Cont'd.)

Anti-surge (Minimum PRV Position)

- Provides a minimum closure of the pre-rotation vanes to suite the measured HEAD pressure input

Hot Gas Control

- Modulates the hot gas valve when the capacity control signal reaches the minimum PRV limit established by the ANTI-SURGE calculation

Subcooler Level Control

- Provides an output signal which increases as the level goes above the set point to open the liquid level control valve and maintain the level at set point

Copyright 2017 by Johnson Controls, Inc

Check Your Understanding—2

Which of these operating parameters are primarily concerned with the safe chiller operation?

- ☑ Evaporator Pressure
- ☑ Condenser Pressure
- ☑ Interstage Differential Pressure Control
- ☑ Motor Load
- ☐ Subcooler Pressure
- ☐ All of the above

Copyright 2017 by Johnson Controls, Inc



General Operating Sequence—System Shutdown

- Unit Not Operating
- System Startup
- Capacity Control Operation
- System Shutdown
- Anti-recycle Operation

Copyright 2017 by Johnson Controls, Inc

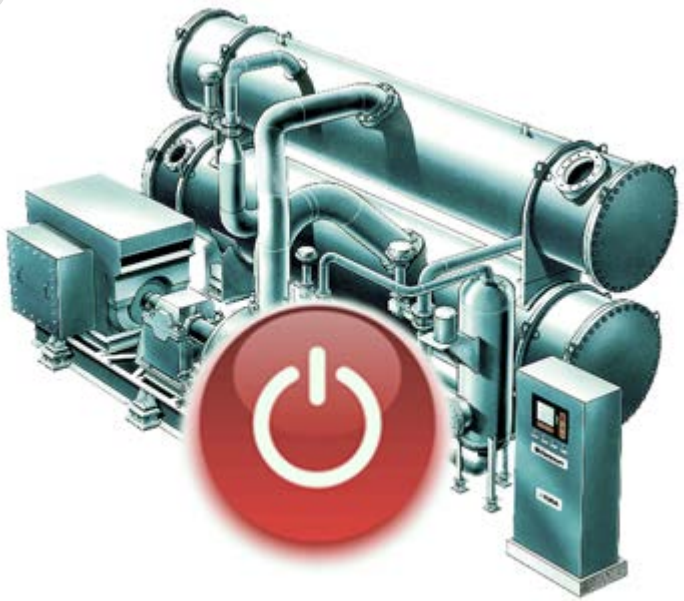

Normal System Shutdown

Local Shutdown

Push **Stop** button.

Shutdown via Safety Controls

Close REMOTE START/STOP CONTACT momentarily.

Copyright 2017 by Johnson Controls, Inc

Shutdown via Safety Controls

The following safeties are hardwired to stop the chiller:

- Emergency stop-pull to stop push button
- Compressor discharge high pressure cutout
- Chilled water low differential pressure cutout
- Condenser water low differential pressure cutout
- All compressor motor starter safeties
- Compressor oil low differential pressure cutout

Copyright 2017 by Johnson Controls, Inc

Shutdown Sequence

1. Vibration monitor trip bypass contact is closed
2. Compressor motor start relay is de-energized
3. Compressor pre-rotation vanes close slowly
4. Hot gas valve opens and interstage valve closes
5. Oil separator heaters and condenser gas supply to jet pump oil eductor solenoid valve are de-energized
6. Water low differential pressure and low oil pressure safety logic is de-activated
7. Anti-recycle timer is activated
8. Compressor sump vent solenoid is de-energized

Copyright 2017 by Johnson Controls, Inc

Shutdown Sequence (Cont'd.)

9. **Interstage liquid injection and auxiliary cooling water solenoid valves are de-energized**

10. **Compressor and gear auxiliary oil pump motors are started**
    - **Post-lube timing logic is enabled**



If the shutdown is caused by low refrigerant pressure, this could be an indication of a major refrigerant leak. In this event, the chilled water flow must be maintained to prevent freeze-up and damage to the tubes.



Five seconds after shutdown, compressor oil heaters are enabled for control by the temperature set point.
One hundred and twenty seconds after shutdown, drive components will have coasted to a stop, and the auxiliary oil pumps will be turned off.

Copyright 2017 by Johnson Controls, Inc

General Operating Sequence—Anti-recycle Operation…Motor Protection Timer

- Unit Not Operating
- System Startup
- Capacity Control Operation
- System Shutdown
- Anti-recycle Operation

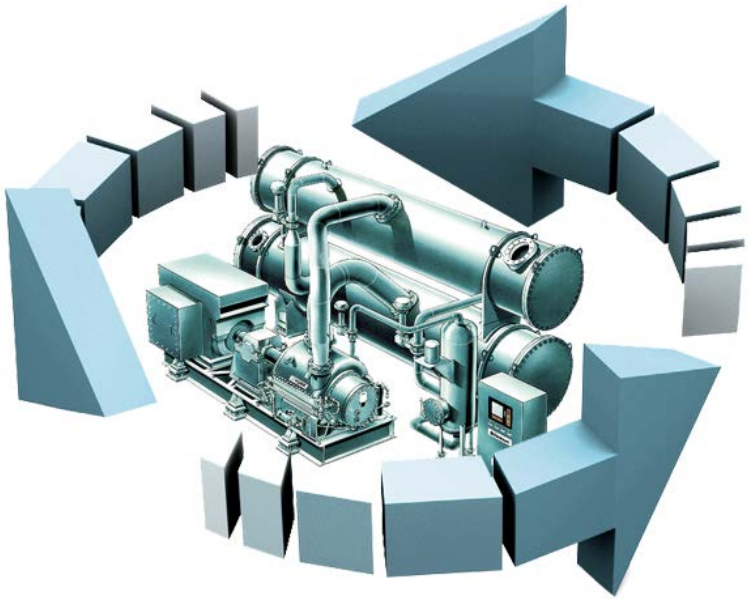

Copyright 2017 by Johnson Controls, Inc

Anti-recycle Operation

Start counter and timers in the anti-recycle operation are:

Cold Starts	Hot Starts	Excessive Starts
■ If the motor has been shutdown for **Cold Start Downtime** hours, the cool down (anti-recycle) time after the first start will be **Cold Start Recycle Time** (1st start) minutes. ■ Any additional starts would be considered hot starts.	■ If the chiller has been running less than **Cold Start Uptime minutes**, the cool down time will be the difference between **Cold Start Uptime** minutes and the **Last Start Runtime**. ■ If the chiller has been running for **Cold Start Uptime** minutes or longer, the cool down time will be the **Hot Start Maximum** Recycle Time.	■ A 24-hour counter is enabled when the motor is started. During the next 24-hour period, the maximum number of starts allowed will be the **Allowed Starts Per Day**. ■ Additional starts attempted in any 24-hour period will be locked out for **Excessive Start Lockout Time** hours.

Copyright 2017 by Johnson Controls, Inc

Review and Recap—Principles of Chiller Operation

Liquid refrigerant flows up and through the evaporator tube bundle

Absorbs heat from the chilled water circulating through the tube bundle and evaporates

Centrifugal compressor draws the refrigerant vapor out of the evaporator

Compressor "pumps" the refrigerant vapor to the condenser

Refrigerant condenses on the cooling tower water tubes of the condenser and collects at the bottom of the condenser

High-pressure liquid refrigerant passes through the sub cooler section and on to the Intercooler

Refrigerant flows over the chilled water coils again completing the cycle

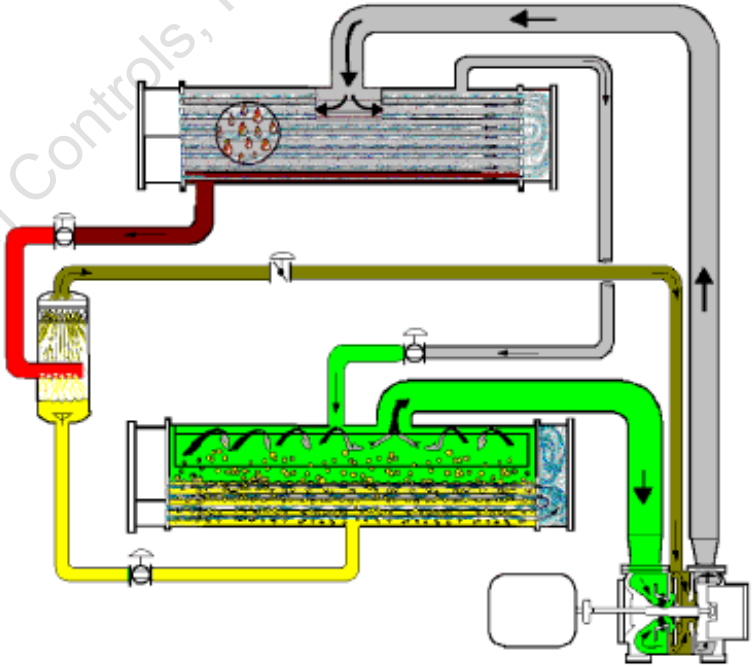

Copyright 2017 by Johnson Controls, Inc

OM Controls

The OM chiller operation is controlled through the control panel – a microprocessor based control system.

- Controls the chilled liquid temperature and limits the motor current by controlling the pre-rotation vanes
- Continually monitors the system operating parameters, records cause(s) of shutdown, and provides status and warning messages
- Allows manual adjustments to operational parameters and system set points

Copyright 2017 by Johnson Controls, Inc





Control Panel User Interface

The control panel has a full screen LCD display coupled with soft buttons and a numeric keypad.

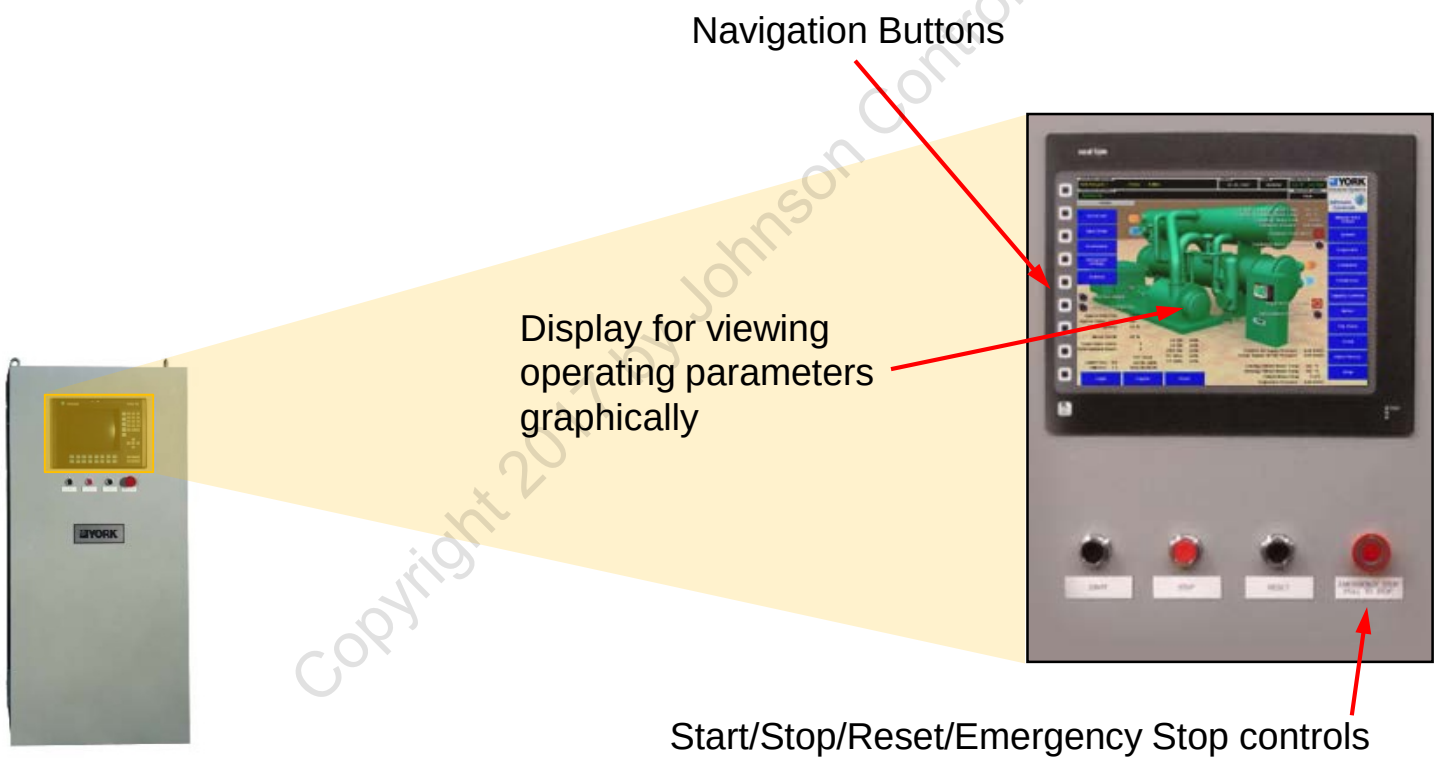

Copyright 2017 by Johnson Controls, Inc

Start/Stop/Reset/Emergency Stop Buttons

Separate push buttons provided on the face of the control panel for chiller start, stop, reset and emergency stop.



Copyright 2017 by Johnson Controls, Inc

Navigation

The ten-button keypad can be redefined based on the screen being displayed making chiller operation quicker and easier with a single button



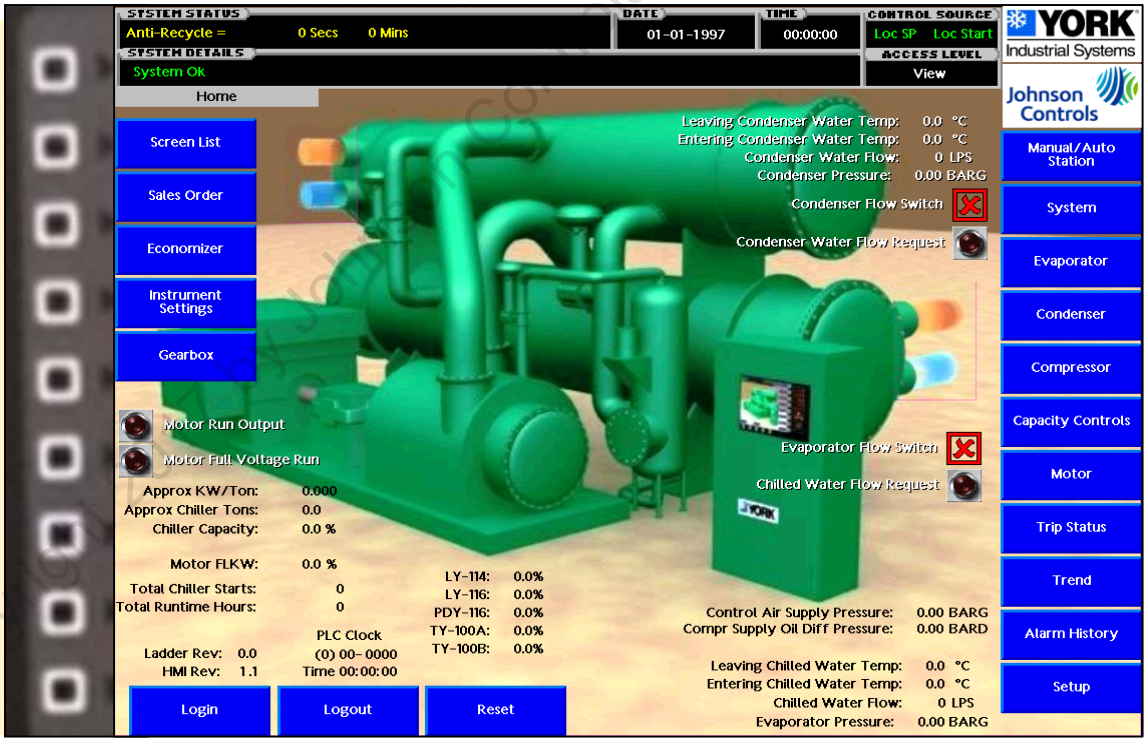

Copyright Johnson Controls, Inc.

Access Levels

View	Operator	Service	Factory
■ Allows viewing only certain screens ■ Does not allow set points to be changed ■ Cannot take manual control of the capacity devices	■ Privileged user ■ Can look at any status item ■ Can change the chilled water set point ■ May use Manual/Auto stations	■ Privileged to access any screen ■ May change tuning parameters	■ Privileged above all other users

Copyright 2017 by Johnson Controls, Inc.

Graphic Display

Main status indicator bar displays the system status, current date and time, control source, access level, and system details.

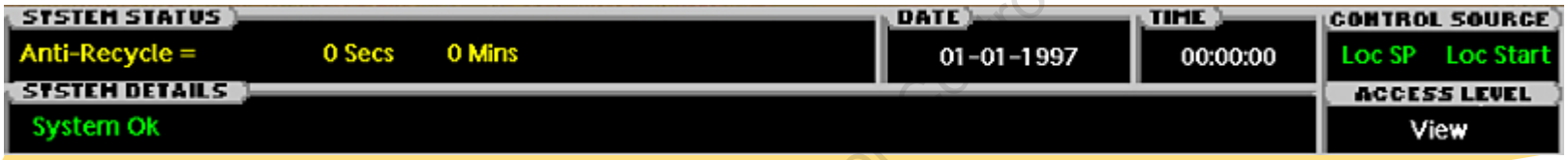



Copyright © 2007 by Johnson Controls, Inc

Graphic Display (Cont'd.)



Our Policy prohibits printing. Save GREEN.

Graphic Display (Cont'd.)

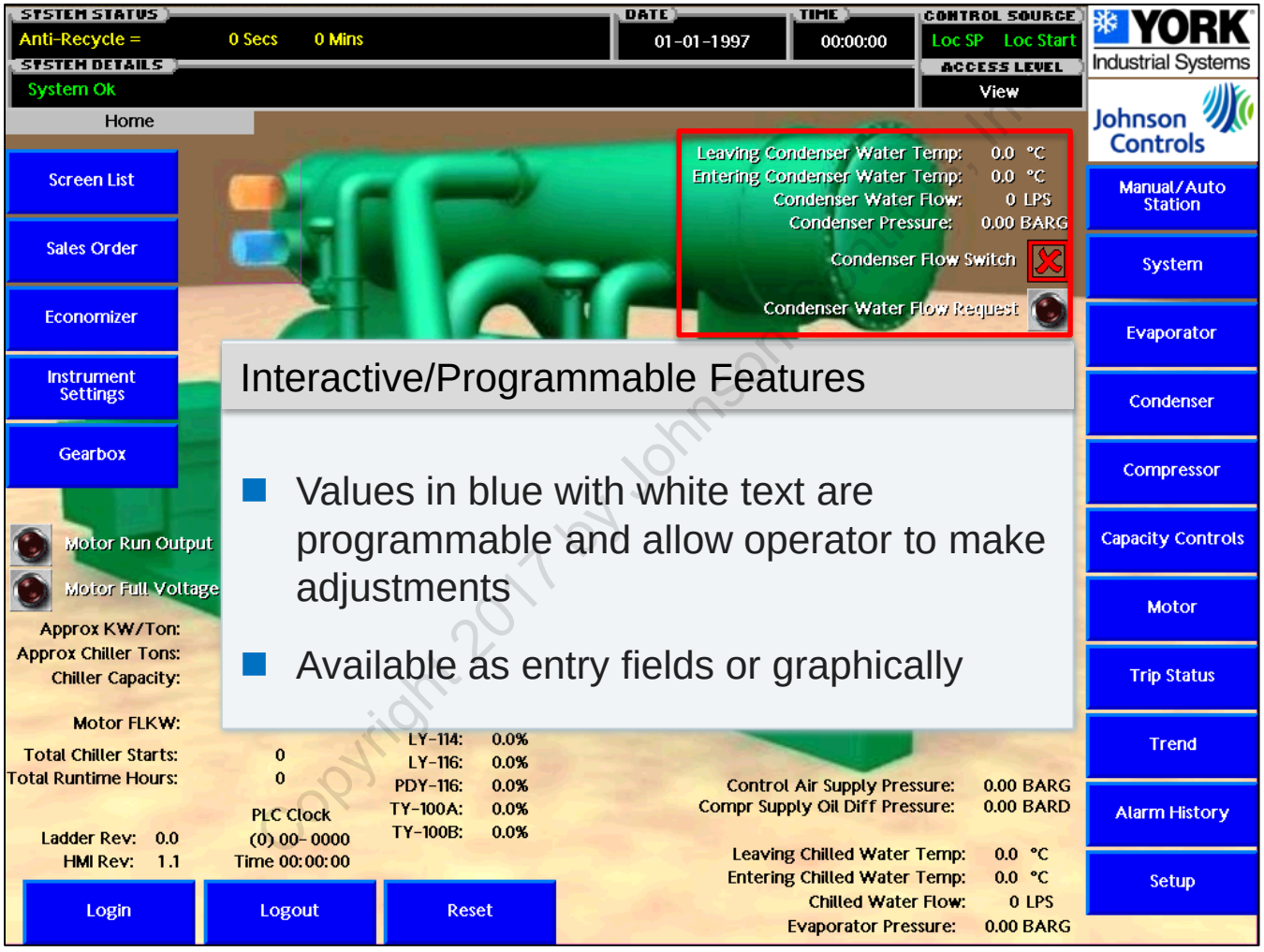

Copyright 2017 by Johnson Controls

Graphic Display (Cont'd.)

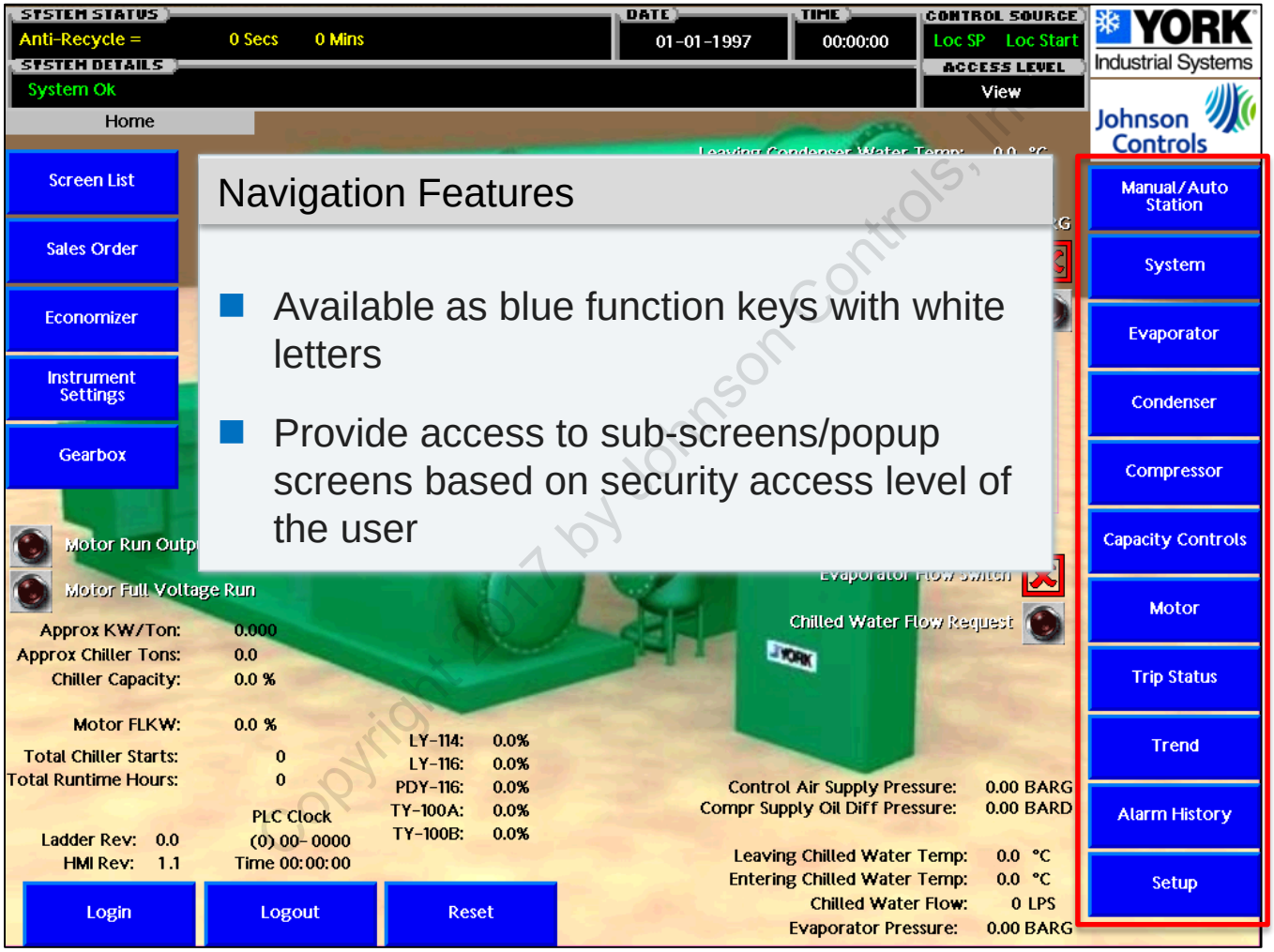

Copyright 2017 by Johnson Controls, Inc.

Graphic Display (Cont'd.)

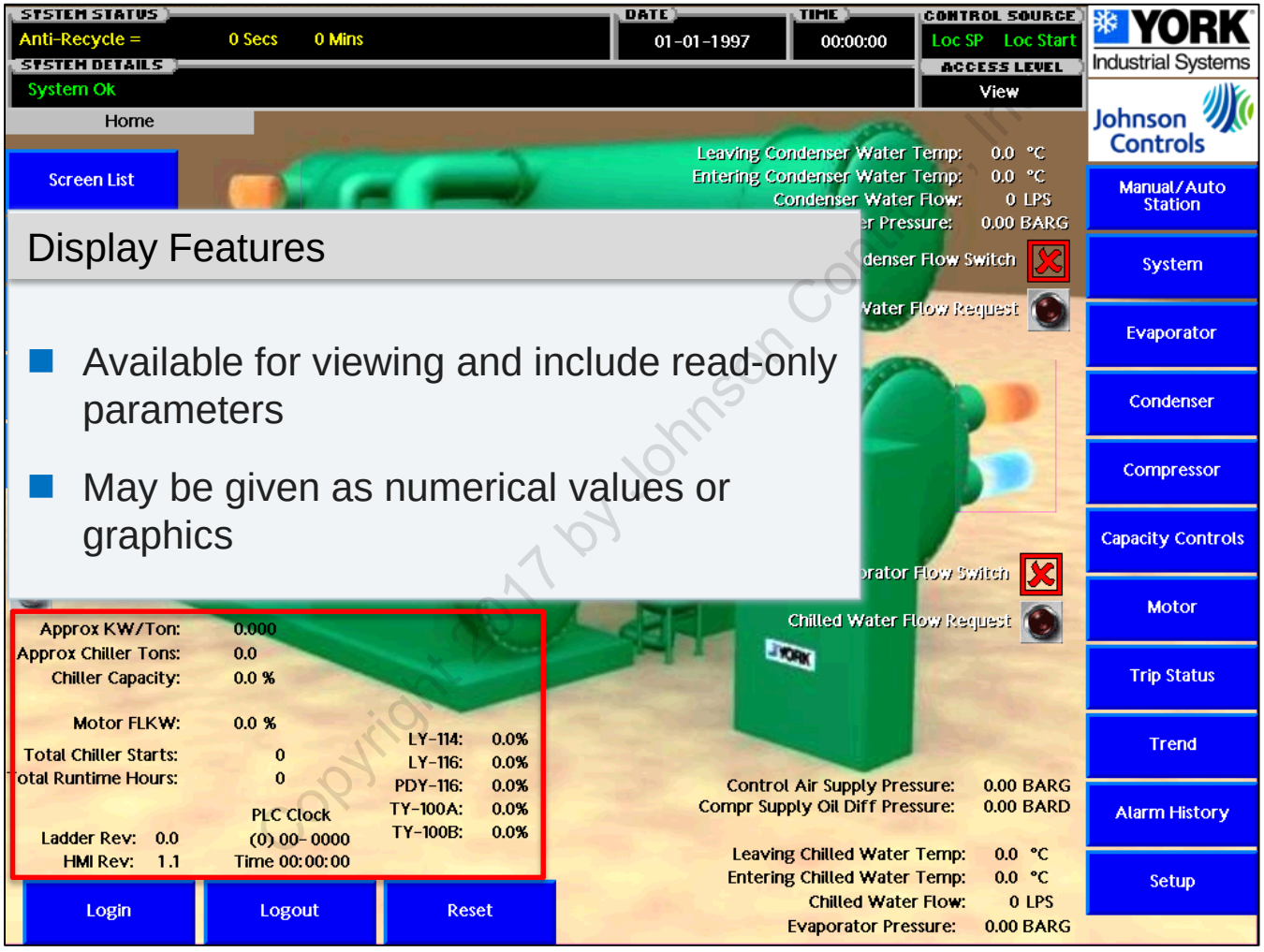

Copyright © 2017 by Johnson Controls, Inc.

System Status

What do the following system status values indicate?

READY TO START	▶ Unit is ready to start in local mode
REMOTE START ENABLED	▶ Unit is ready to start in remote mode
PRE-LUBE (Loc) = XXX sec	▶ Local initiated start/Pre-lube cycle
PRE-LUBE (Rem) = XXX sec	▶ Remote initiated start/Pre-lube cycle
SYSTEM RUNNING	▶ System running
POST-LUBE = XXX sec	▶ System stopping/Post-lube cycle
SYSTEM TRIPPED	▶ System tripped offline
ANTI-RECYCLE = XX Hours XX Mins/Secs	▶ Anti-recycle countdown
Control Stop	▶ Control stop initiated
Remote Start Inhibit, Press Local Start Button	▶ Remote mode selected/not confirmed
Capacity Control Override	▶ System running in dynamic override
Processor Fault	▶ PLC processor is not responding

Copyright 2017 by Johnson Controls, Inc

Screen Symbols



Red LED symbol is ON



Grey LED symbol is OFF



Running pumps shown RED

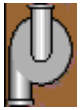

Pumps not running shown GREY



Energized solenoid output RED



De-energized solenoid output GREY



Pre-trip Alarm (Yellow Text)



Trip (Red Text)



GREEN check symbol = OK or an input is ON



RED check symbol = Not OK or input is OFF



Measurement Parameter Text
Measurement parameter text changes to GREEN blinking if the analog input signal goes out of range and will remain in this state until the RESET pushbutton is pushed after the input signal returns to normal.

Copyright 2017 by Johnson Controls, Inc.

Types of Screens

- Home Screen
- Manual/Auto Station Screen
- System Screen
- Evaporator Screen
- Condenser Screen
- Compressor Screen
- Capacity Controls Screen
- Motor Screen
- Trip Status Screen
- Trend Screen
- Alarm History Screen
- Setup Screen



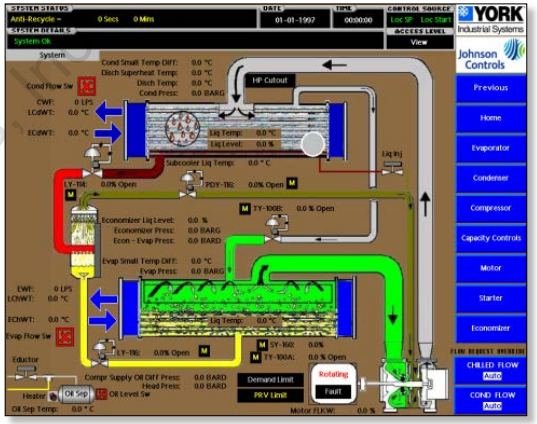

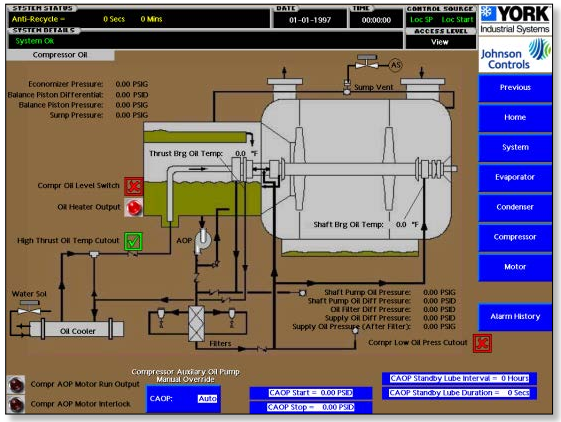

Copyright 2017 by Johnson Controls

Home Screen

- Home Screen
- Manual/Auto Station Screen
- System Screen
- Evaporator Screen
- Condenser Screen
- Compressor Screen
- Capacity Controls Screen
- Motor Screen
- Trip Status Screen
- Trend Screen
- Alarm History Screen
- Setup Screen

- Displays the primary values to be monitored and controlled
- Allows navigation to other system screens

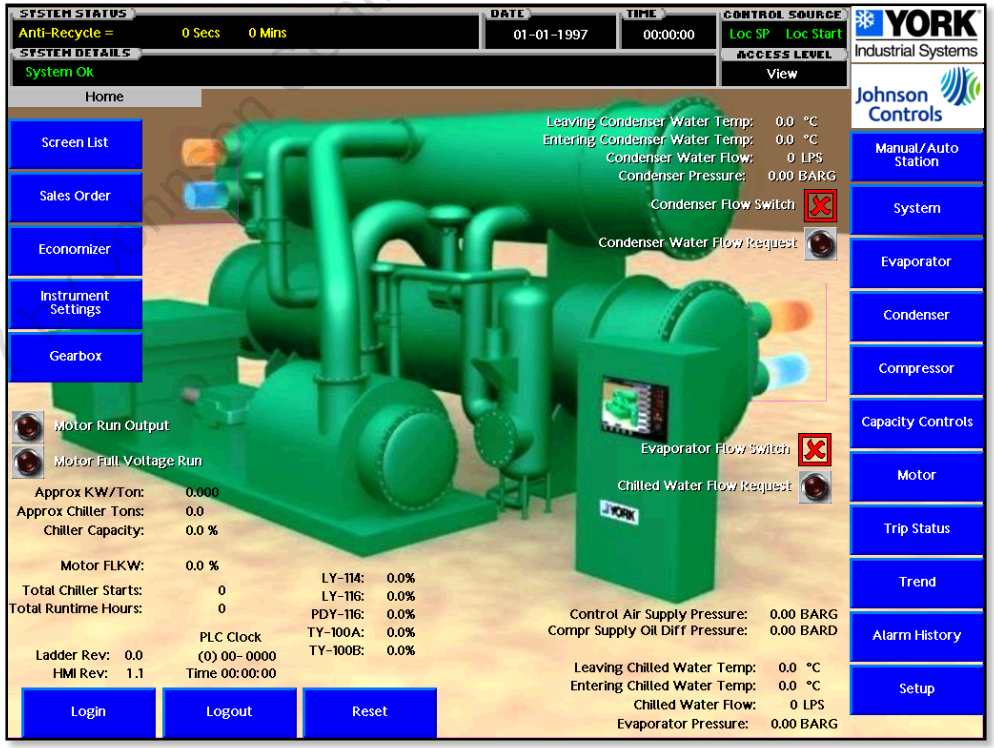

Copyright 2017 Johnson Controls, Inc

Home Screen Controls



Manual Automatic Station Screen

- Home Screen
- Manual/Auto Station Screen
- System Screen
- Evaporator Screen
- Condenser Screen
- Compressor Screen
- Capacity Controls Screen
- Motor Screen
- Trip Status Screen
- Trend Screen
- Alarm History Screen
- Setup Screen

Allows manual control of all capacity control devices

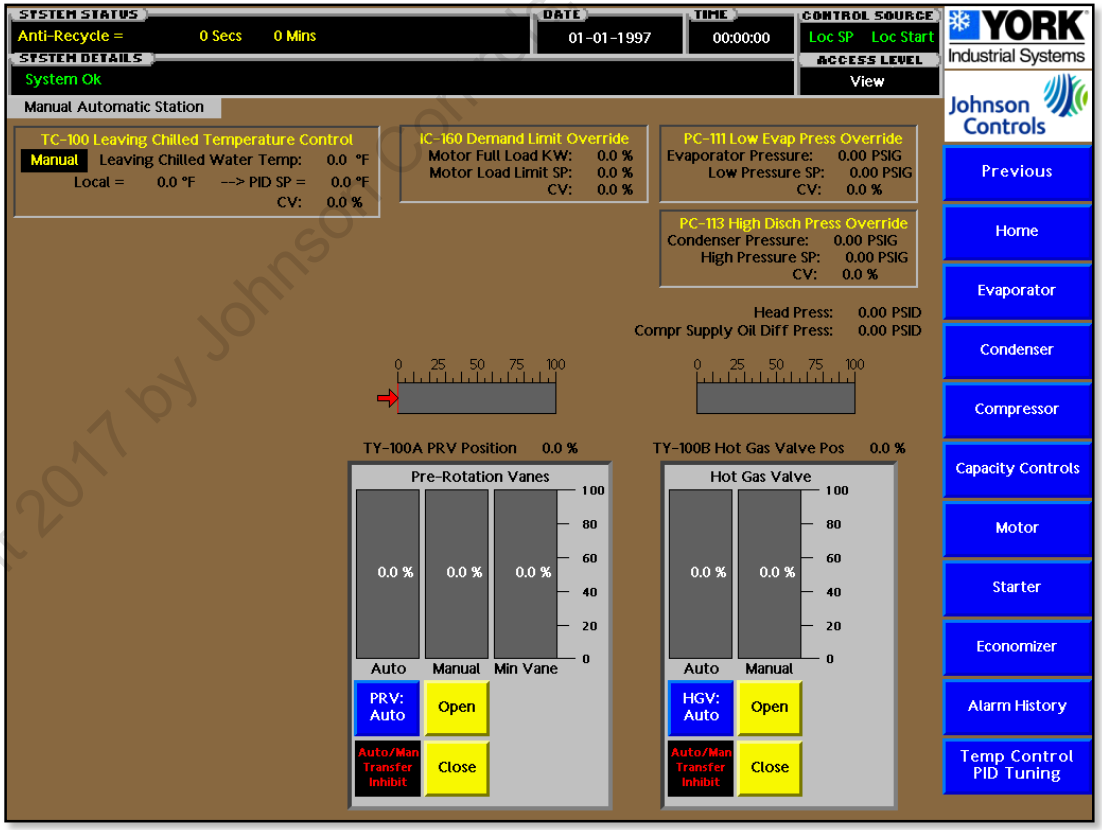

Copyright 2017 by Johnson Controls Inc

System Screen

- Home Screen
- Manual/Auto Station Screen
- System Screen
- Evaporator Screen
- Condenser Screen
- Compressor Screen
- Capacity Controls Screen
- Motor Screen
- Trip Status Screen
- Trend Screen
- Alarm History Screen
- Setup Screen

- Provides a general overview of common chiller parameters
- Includes display and navigation controls

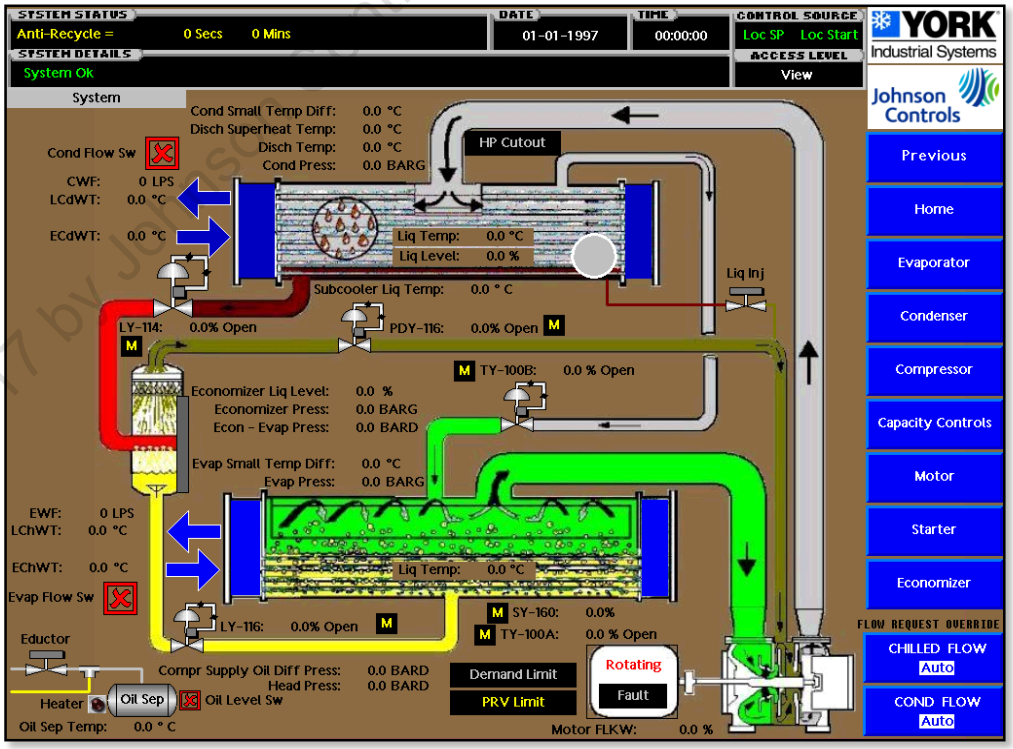

Copyright 2017 by Johnson Controls, Inc

System Screen (Cont'd.)

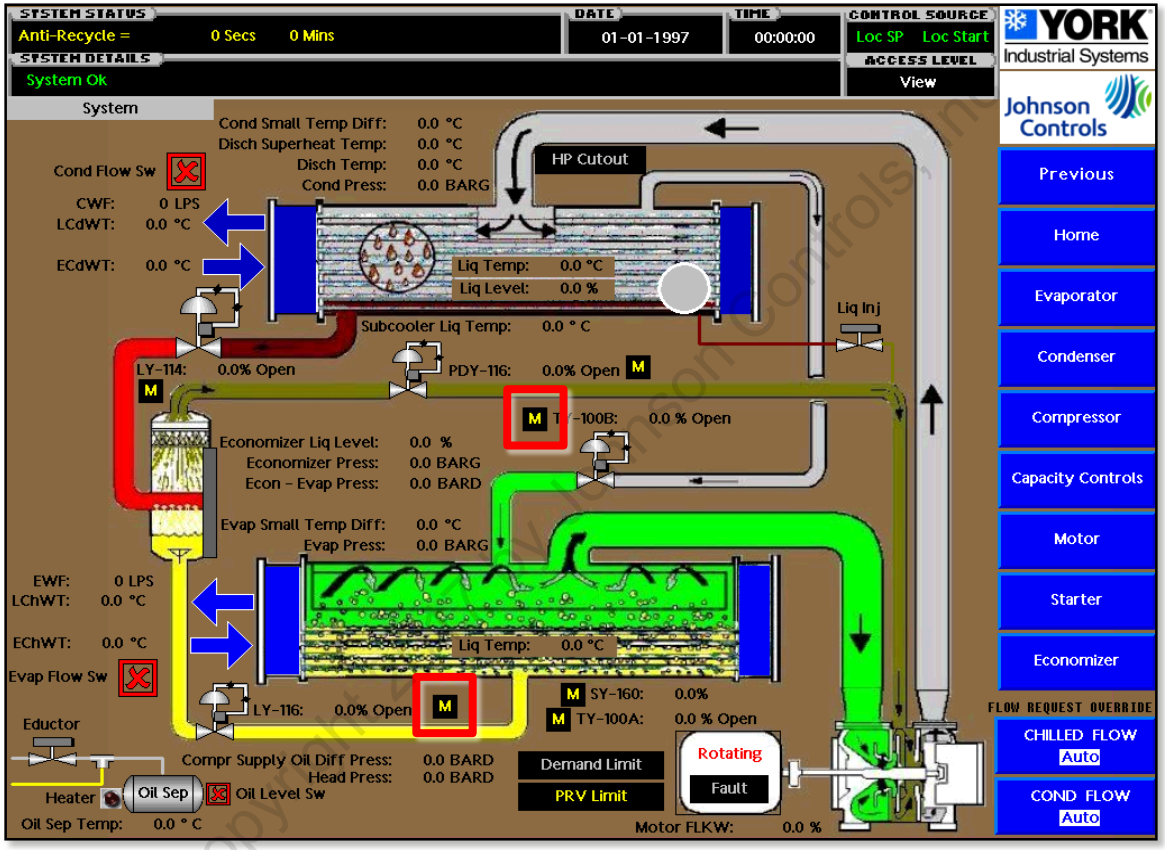

What does the M on this system screen indicate?

This symbol indicates control device being manually controlled by an Auto/Manual station.

Evaporator Screen

- Home Screen
- Manual/Auto Station Screen
- System Screen
- Evaporator Screen
- Condenser Screen
- Compressor Screen
- Capacity Controls Screen
- Motor Screen
- Trip Status Screen
- Trend Screen
- Alarm History Screen
- Setup Screen

Shows and maintains the set points associated with the evaporator side of the chiller

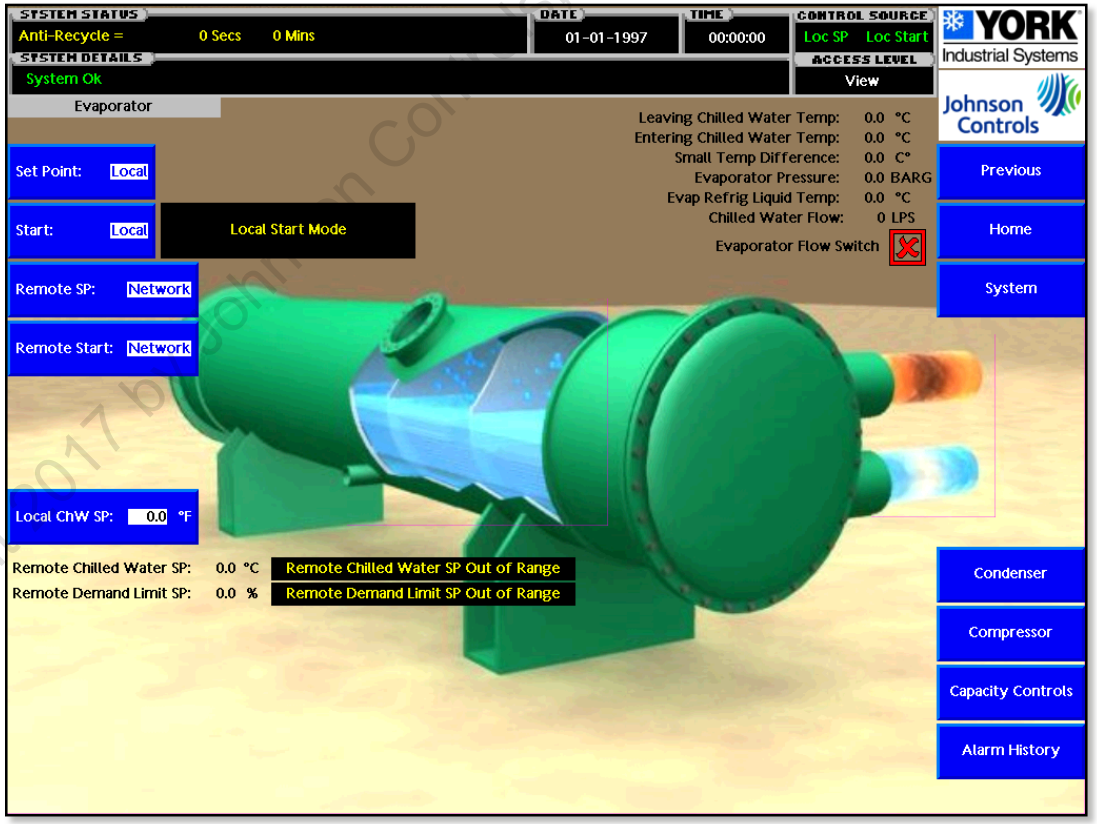

Copyright 2017 by Johnson Controls, Inc

Evaporator Screen Display Controls

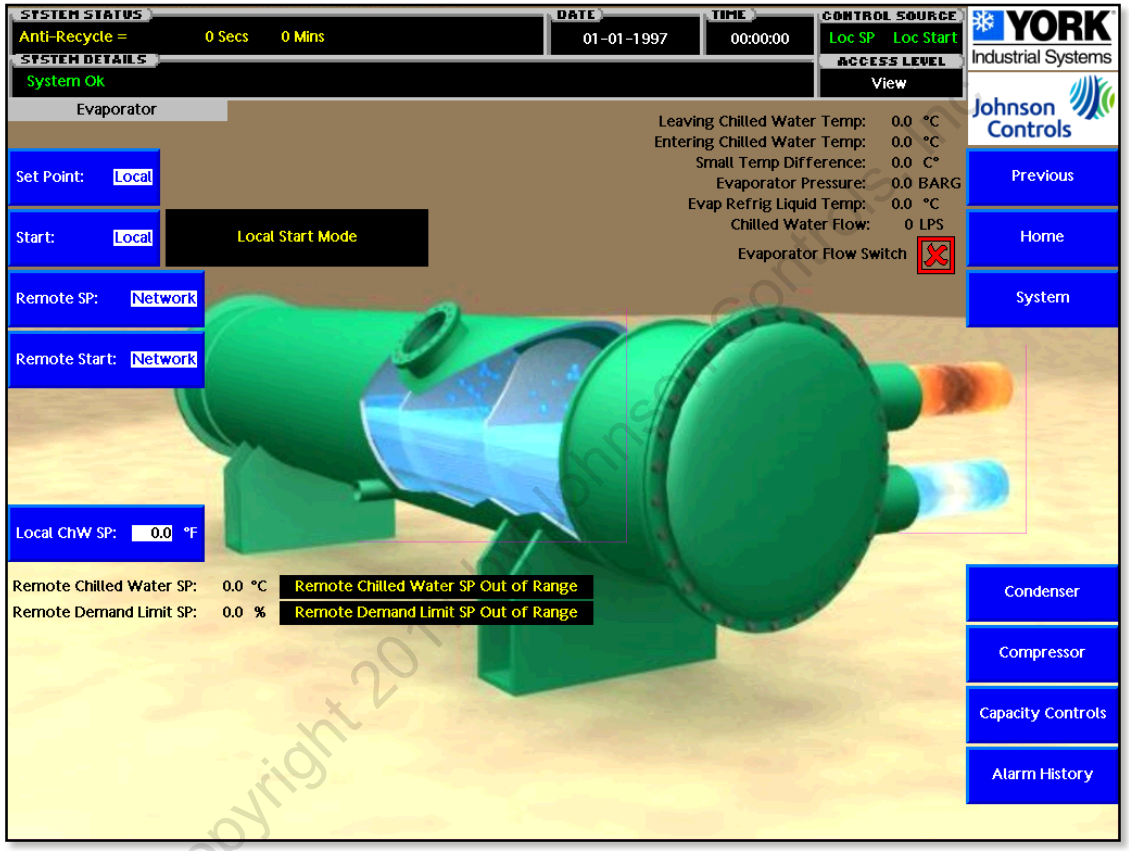

Copyright 2014 Johnson Controls

What does a high temperature difference indicate?

High temperature difference indicates fouled tubes or improper charge.

Condenser Screen

- Home Screen
- Manual/Auto Station Screen
- System Screen
- Evaporator Screen
- Condenser Screen
  - Subcooler Screen
  - Economizer Screen
- Compressor Screen
- Capacity Controls Screen
- Motor Screen
- Trip Status Screen
- Trend Screen

- Shows and maintains the set points associated with the condenser side of the chiller
- Serves as a gateway to controlling the refrigerant level

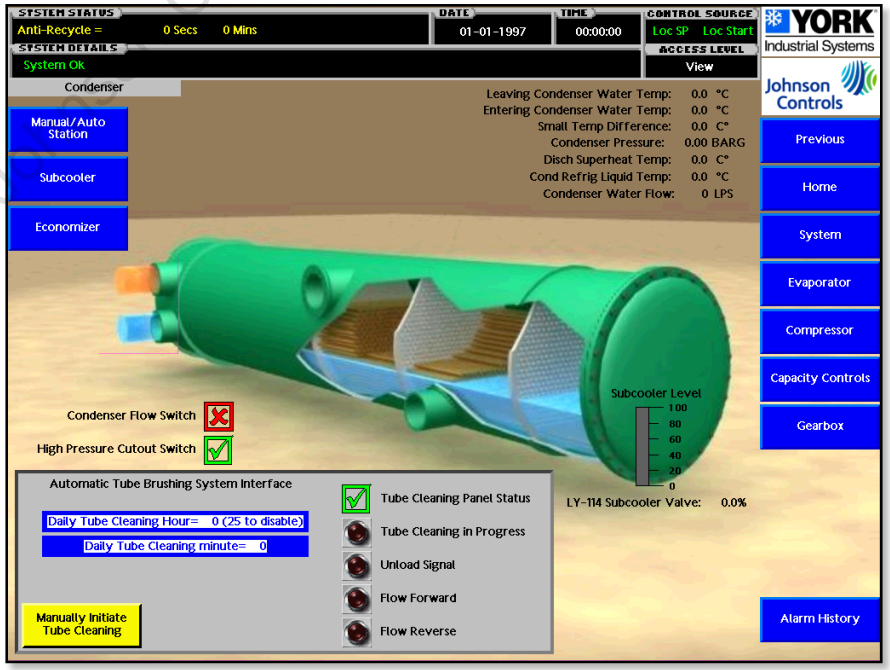

Copyright 2017 by Johnson Controls, Inc.

Condenser Screen Display Controls

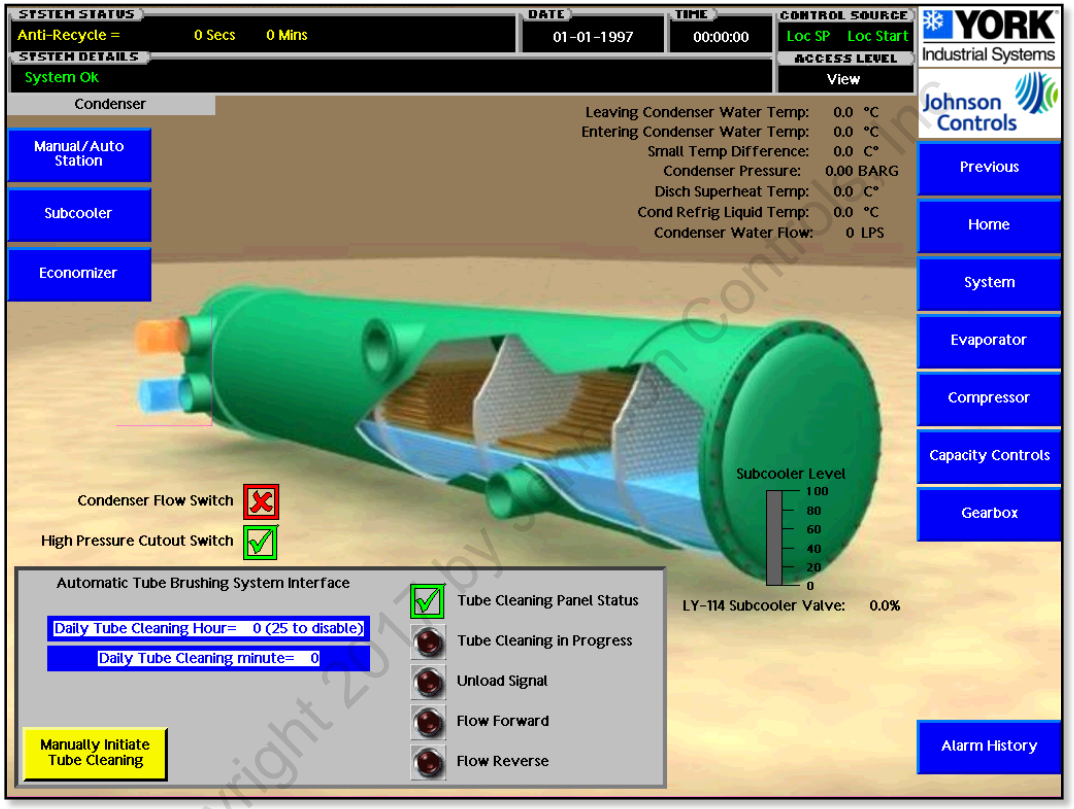

Copyright 2017 by Johnson Controls Inc

What happens if the pressure cutout switch ever shows open?

You need to investigate the condenser vessel pressure and evaluate the integrity of the switch. The switch is installed per code with no intervening stop value.

Condenser Screen

- Home Screen
- Manual/Auto Station Screen
- System Screen
- Evaporator Screen
- Condenser Screen
  - Subcooler Screen
  - Economizer Screen
- Compressor Screen
- Capacity Controls Screen
- Motor Screen
- Trip Status Screen
- Trend Screen

Allows lowering the refrigerant temperature from the basic saturation temperature to a temperature closer to the entering water temperature

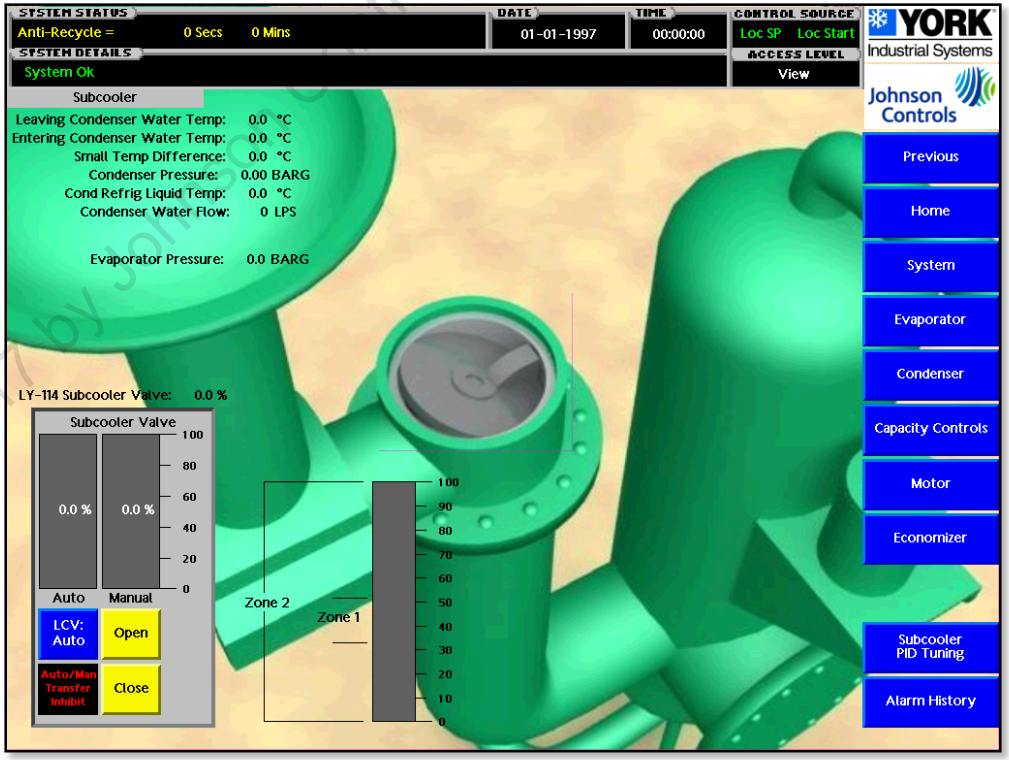

Copyright 2017 by Johnson Controls, Inc.

Subcooler/Refrigerant Level Control Screen (Cont'd.)

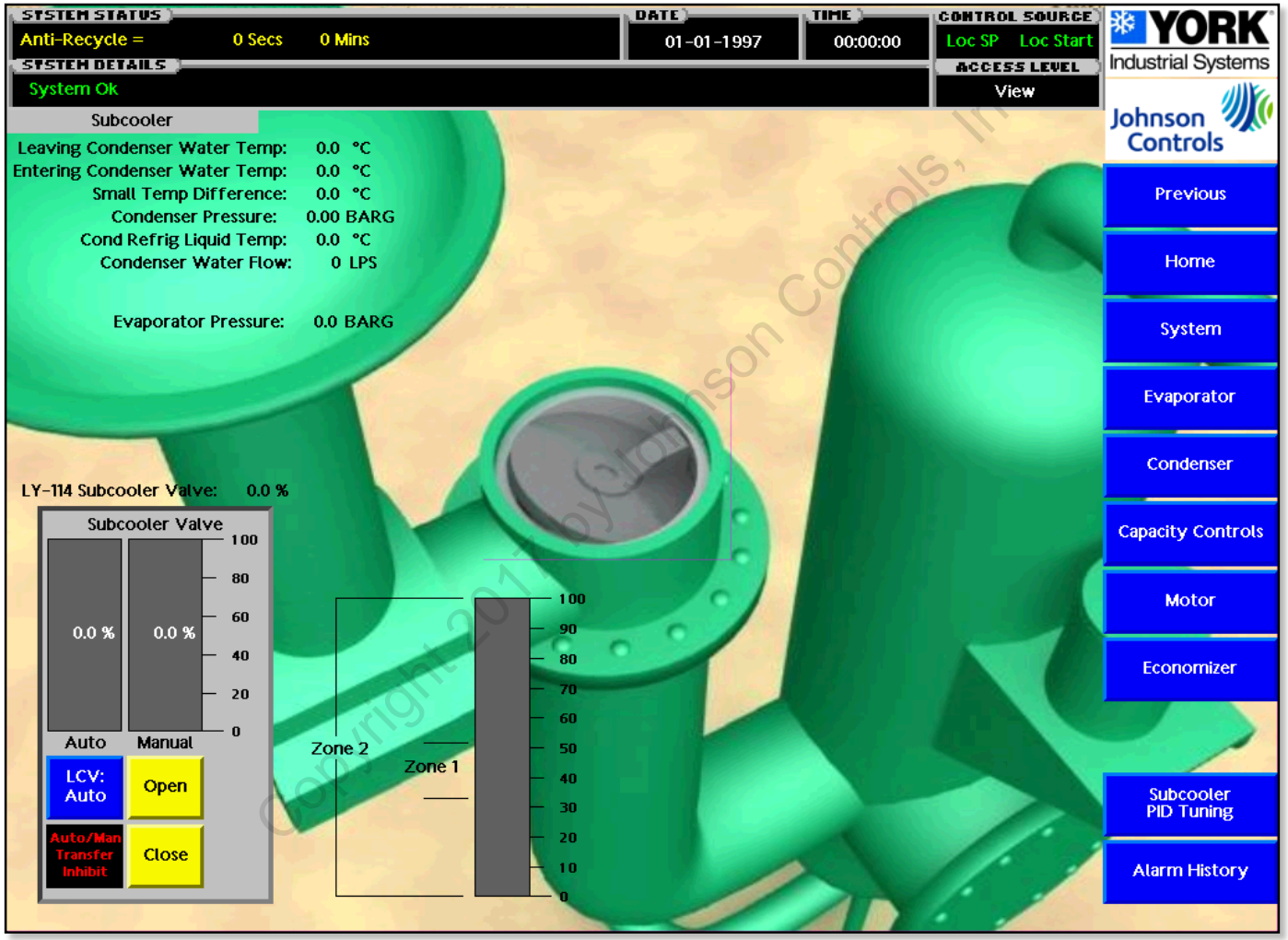

Our Policy prohibits printing. Save GREEN.

Economizer Screen

- Home Screen
- Manual/Auto Station Screen
- System Screen
- Evaporator Screen
- Condenser Screen
  - Subcooler Screen
  - Economizer Screen
- Compressor Screen
- Capacity Controls Screen
- Motor Screen
- Trip Status Screen
- Trend Screen

- Depicts the operation of the economization vessel
- Allows manual/auto control of economizer liquid valve and interstage DP valve

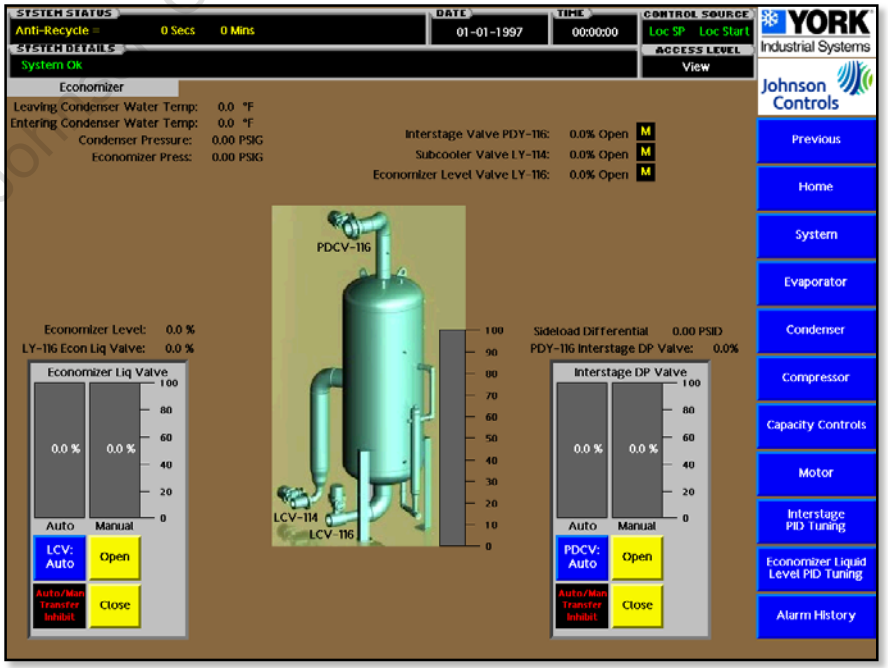

Copyright 2017 by Johnson Controls, Inc

Economizer Screen (Cont'd.)

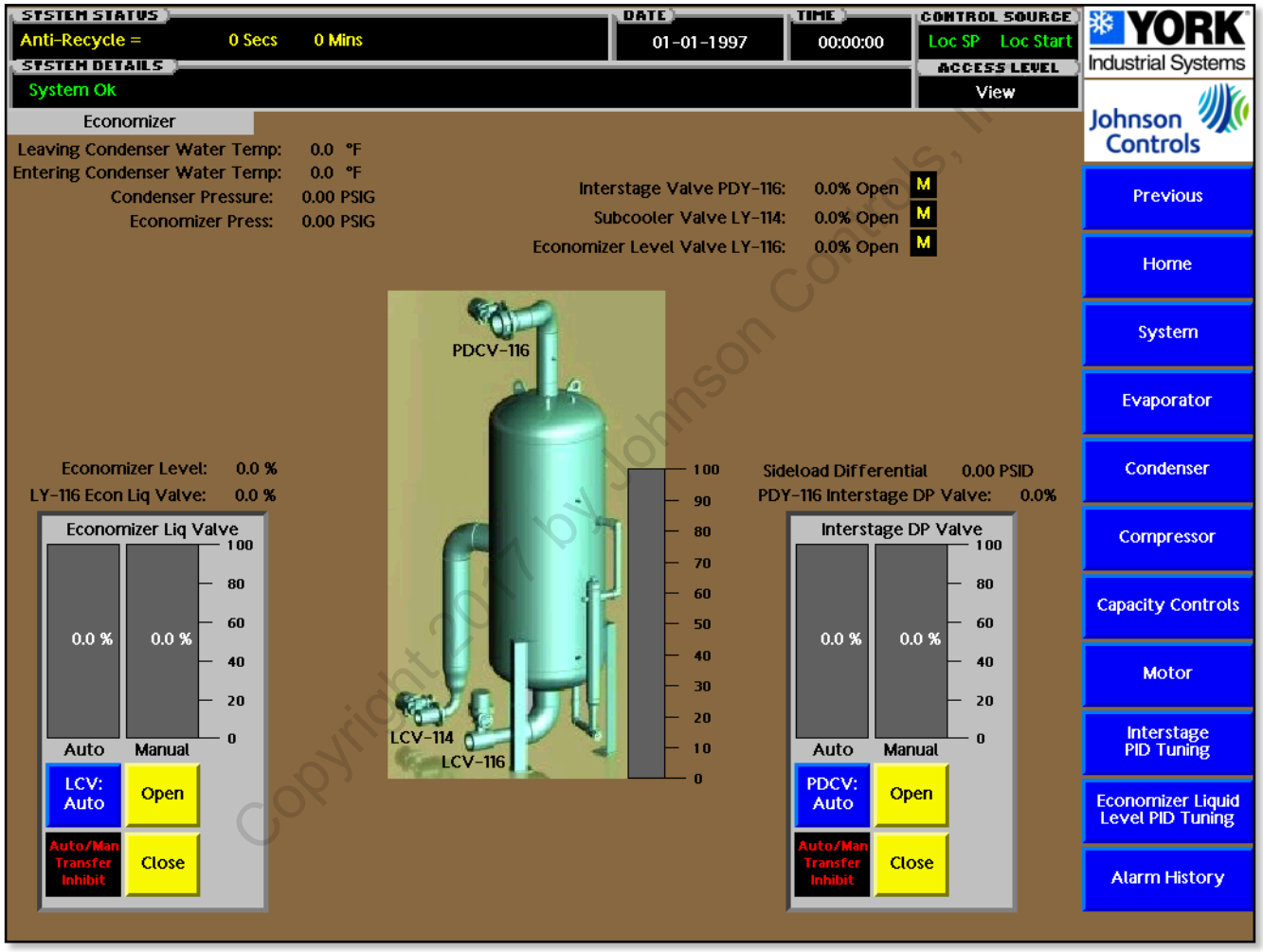

Copyright 2017 by Johnson Controls, Inc.

Compressor Screen

- Home Screen
- Manual/Auto Station Screen
- System Screen
- Evaporator Screen
- Condenser Screen
- Compressor Screen
  - Lubrication System Screen
- Capacity Controls Screen
- Motor Screen
- Trip Status Screen
- Trend Screen
- Alarm History Screen

- Reveals the impeller and all other conditions associated with compressor
- Allows manual control of PRVs
- Serves as a gateway to compressor lubrication system sub-screens
- Allows configuration of the hot gas bypass and the interstage valve
- Includes display, programmable, and navigation controls

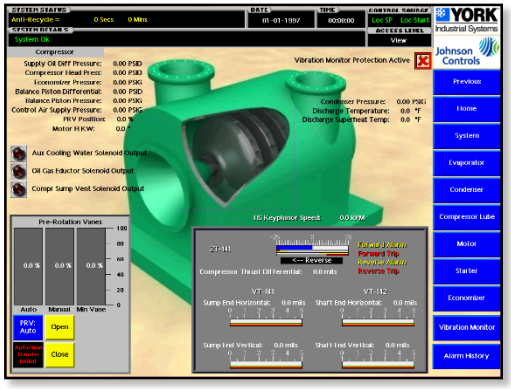

Copyright 2017 by Johnson Controls, Inc

Compressor Screen Controls

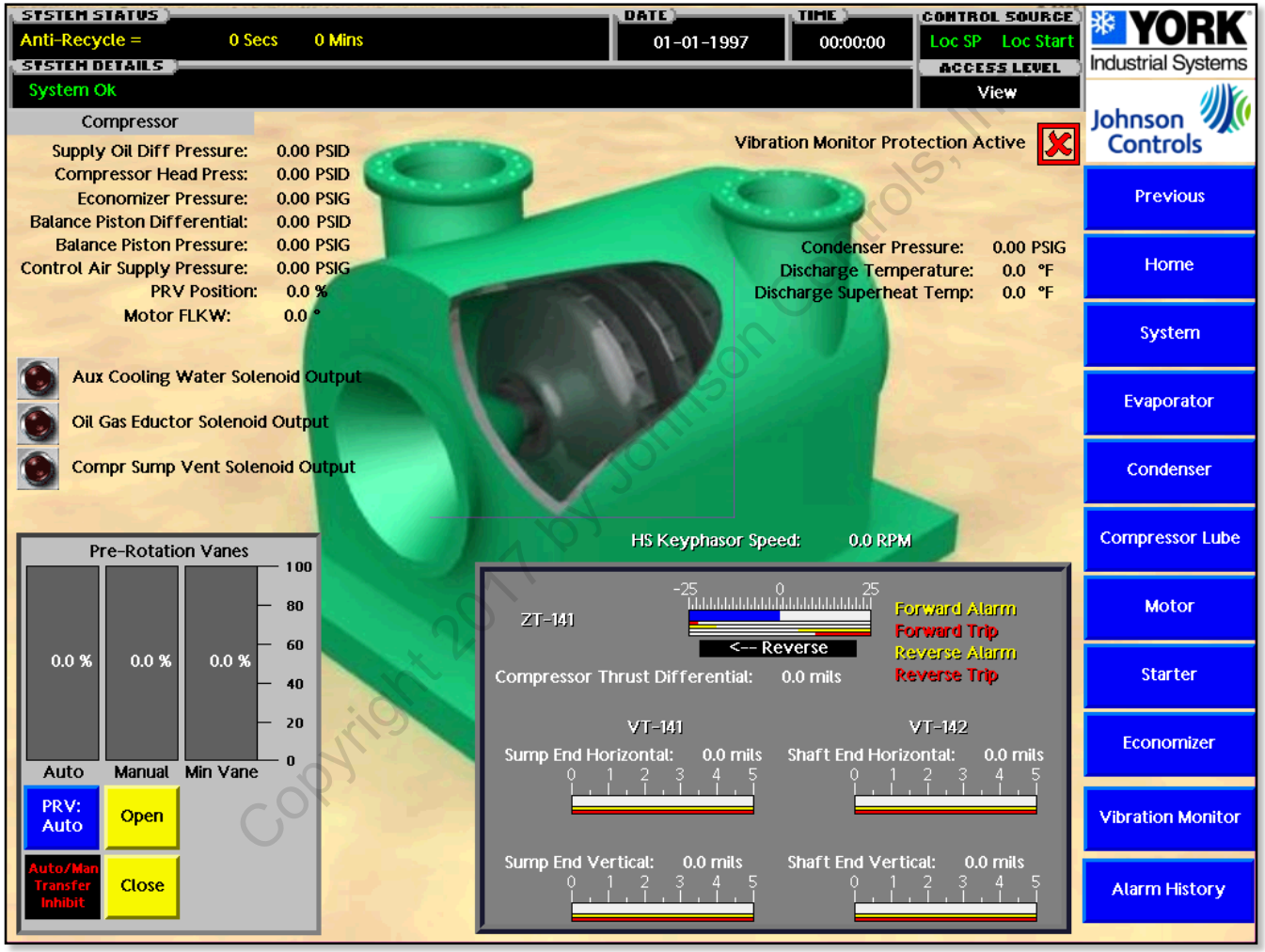

Copyright 2017 by Johnson Controls, Inc.

Lubrication System Screen

- Home Screen
- Manual/Auto Station Screen
- System Screen
- Evaporator Screen
- Condenser Screen
- Compressor Screen
  - Lubrication System Screen
- Capacity Controls Screen
- Motor Screen
- Trip Status Screen
- Trend Screen
- Alarm History Screen

- Displays the major components as well as the temperatures, pressures, and outputs for the oil pump compressor lubrication system
- Allows manual control of the auxiliary oil pump for up to 10 minutes

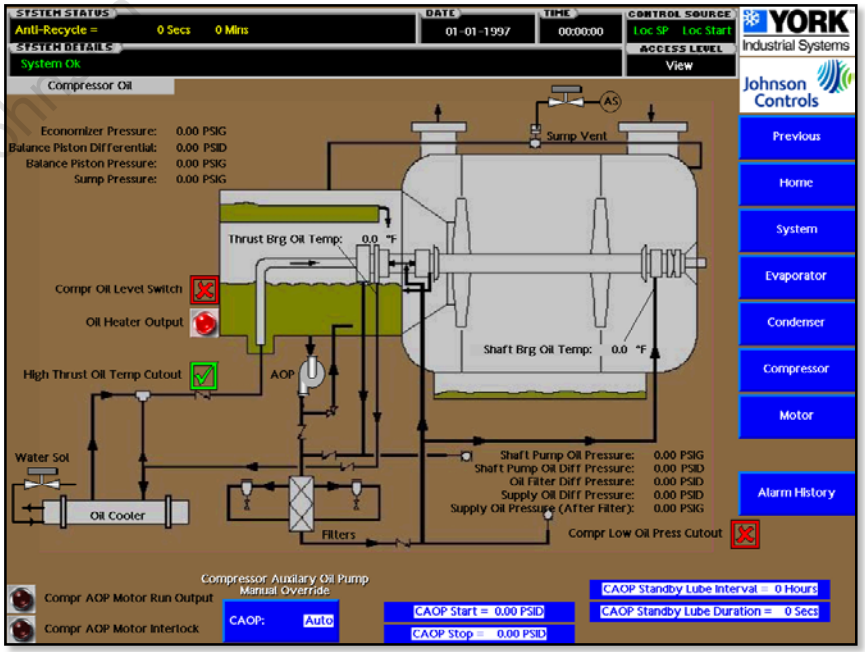

Copyright 2017 by Johnson Controls, Inc.

Lubrication System Screen (Cont'd.)

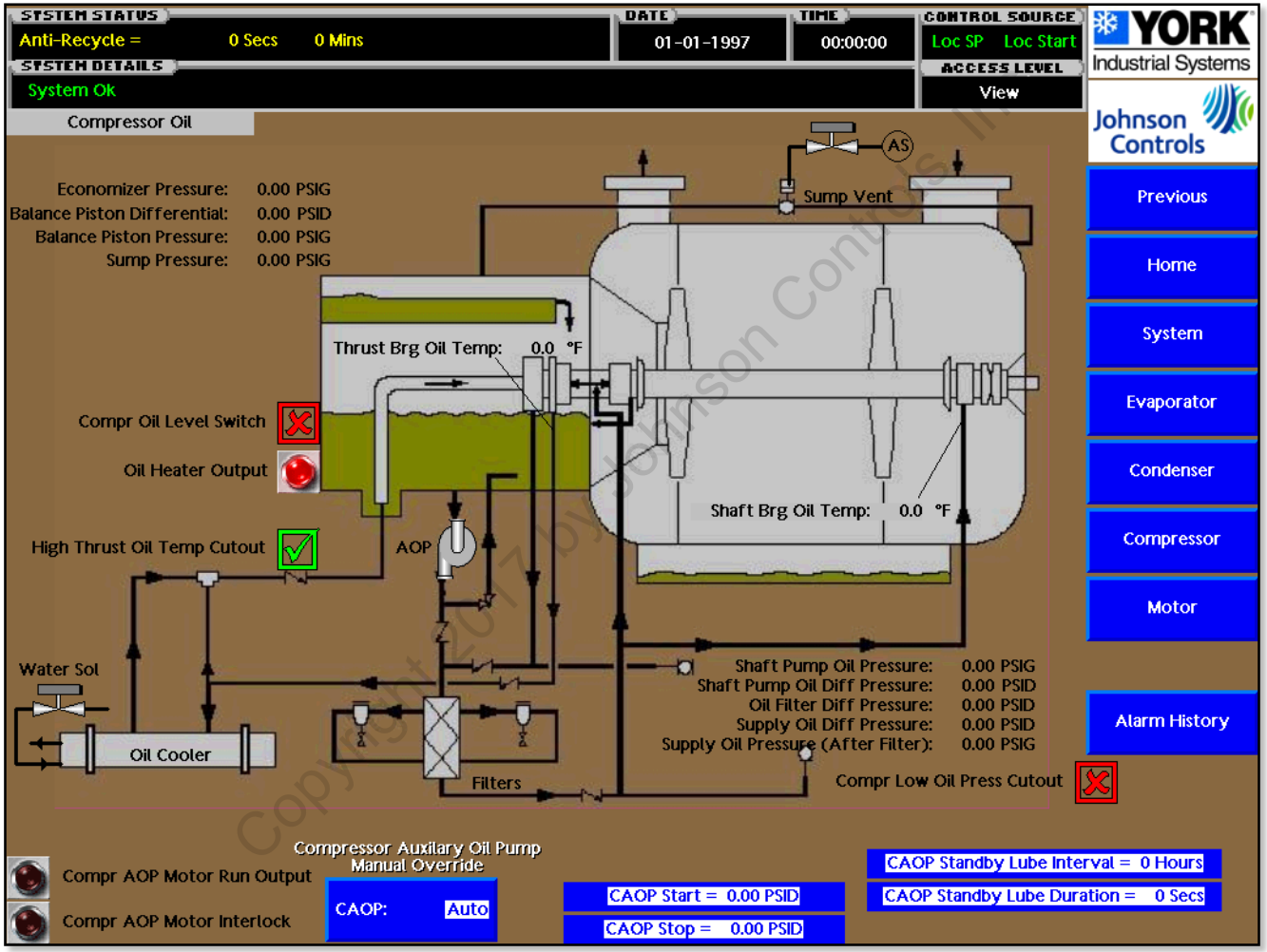

Capacity Controls Screen

- Home Screen
- Manual/Auto Station Screen
- System Screen
- Evaporator Screen
- Condenser Screen
- Compressor Screen
- Capacity Controls Screen
  - Anti Surge Tuning Parameters Screen
- Motor Screen
- Trip Status Screen
- Trend Screen
- Alarm History Screen

Schematically illustrates the logical operations of chiller capacity controls

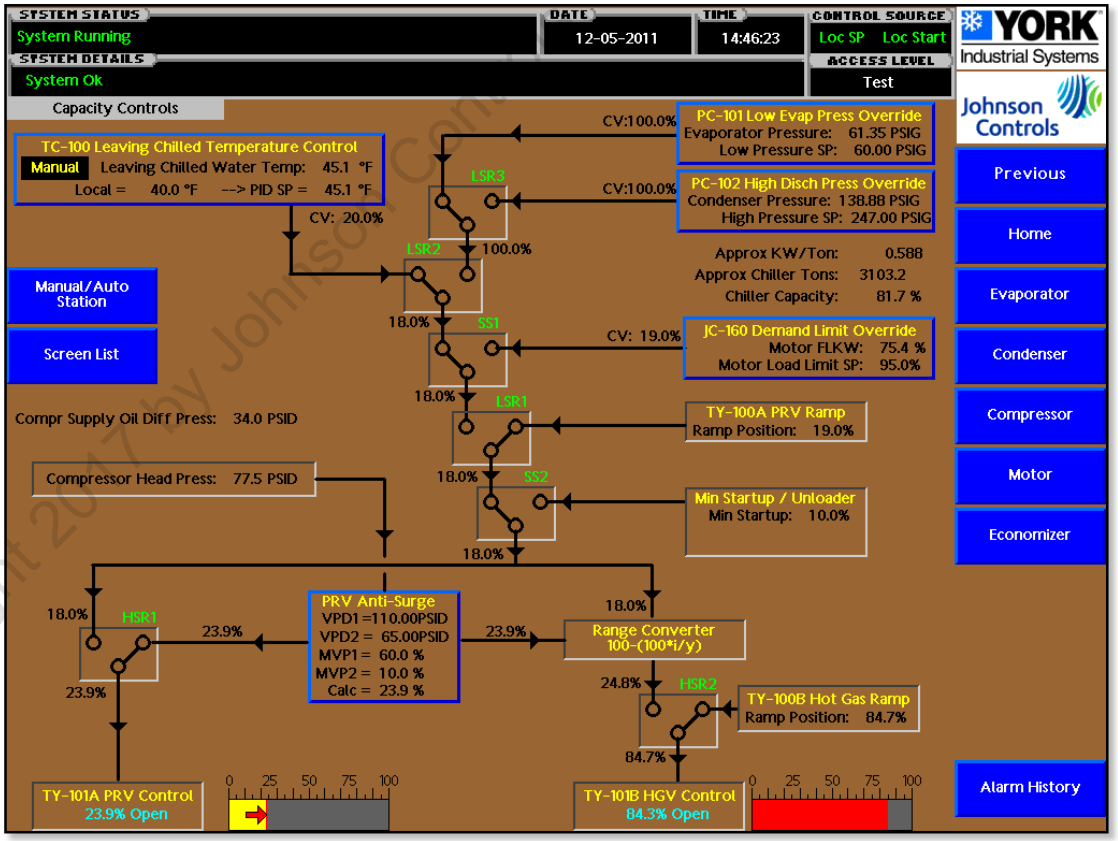

Copyright 2017 by Johnson Controls, Inc

Capacity Controls Screen (Cont'd.)

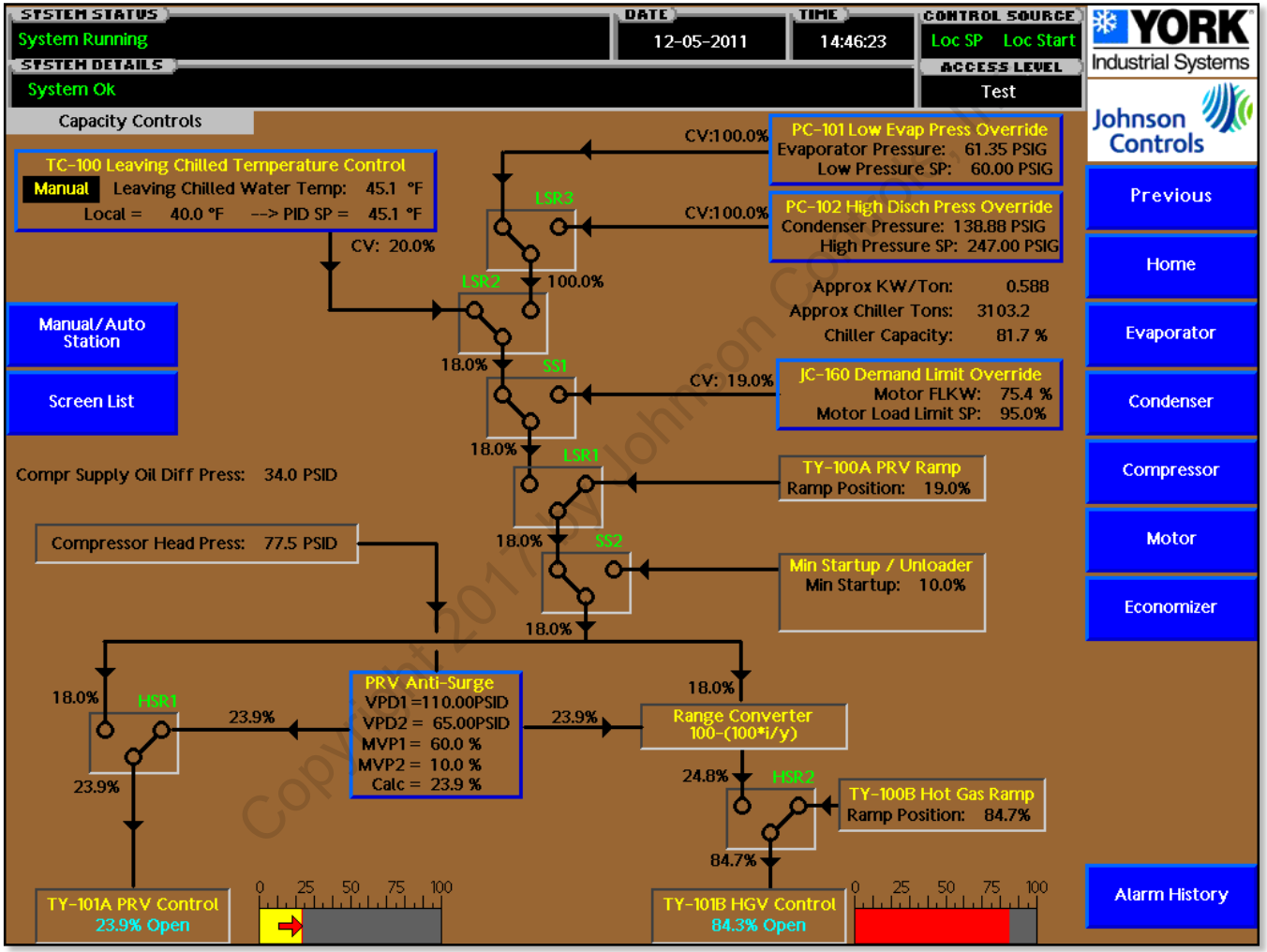

Copyright 2011 Johnson Controls

Overrides

- Control evaporator pressure, condenser pressure, intercooler pressure and motor load
- Available from the capacity tuning or Manual/Auto station screen

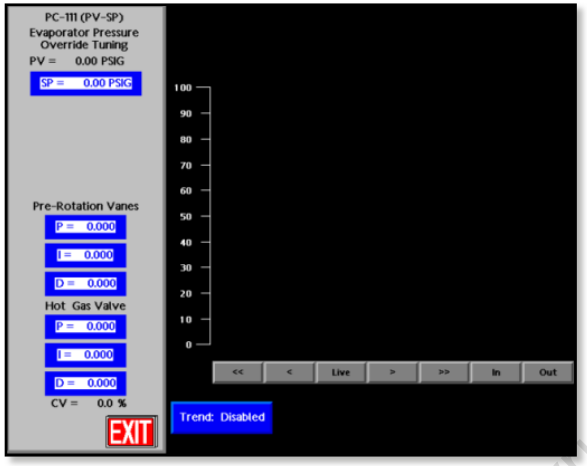

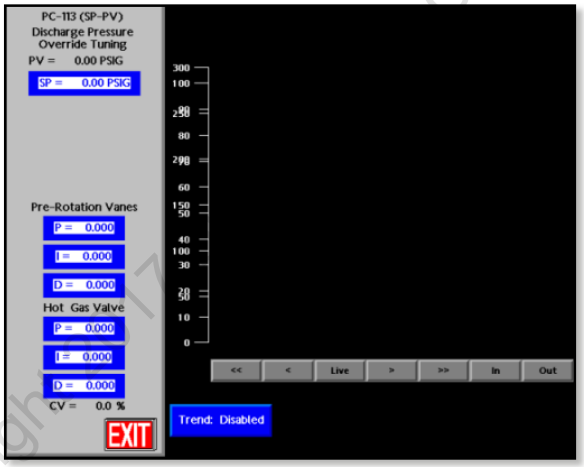

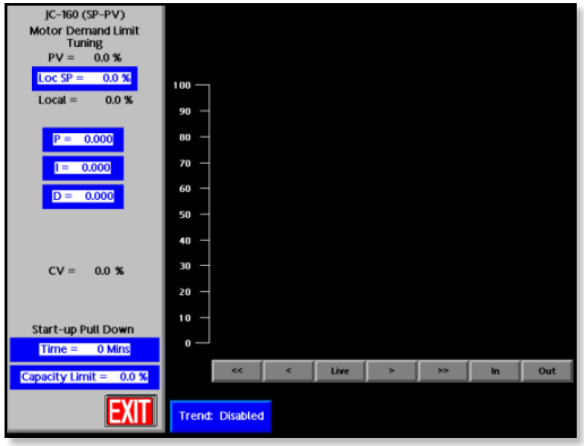

Copyright © 2017 Johnson Controls, Inc

Overrides (Cont'd.)

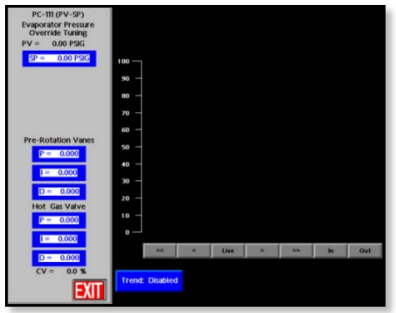

Evaporator Low Pressure Override

- Allows quick response to a system approaching freezing condition of low suction pressure
- Displays current evaporator and low pressure override set point

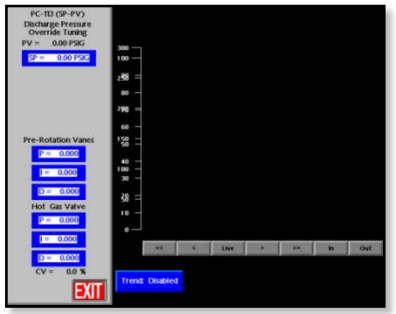

High Discharge Pressure Override

- Prevents shutdowns on high pressure conditions and keeps the chiller unloaded
- Displays current condenser pressure and high pressure override set point

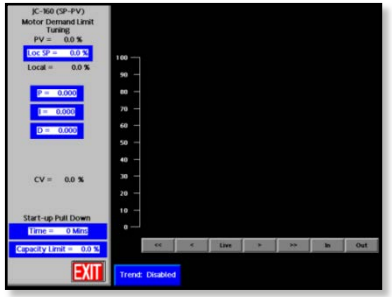

Demand Limit Override

- Keeps the motor from going into an over current situation
- Displays current motor percent FLA and motor load override set point

Copyright 2011 by Johnson Controls, Inc

Anti-surge Tuning Parameters Screen

- Home Screen
- Manual/Auto Station Screen
- System Screen
- Evaporator Screen
- Condenser Screen
- Compressor Screen
- Capacity Controls Screen
  - Anti Surge Tuning Parameters Screen
- Motor Screen
- Trip Status Screen
- Trend Screen
- Alarm History Screen

Shows plots with the surge area as a function of compressor head vs. PRV position and motor speed

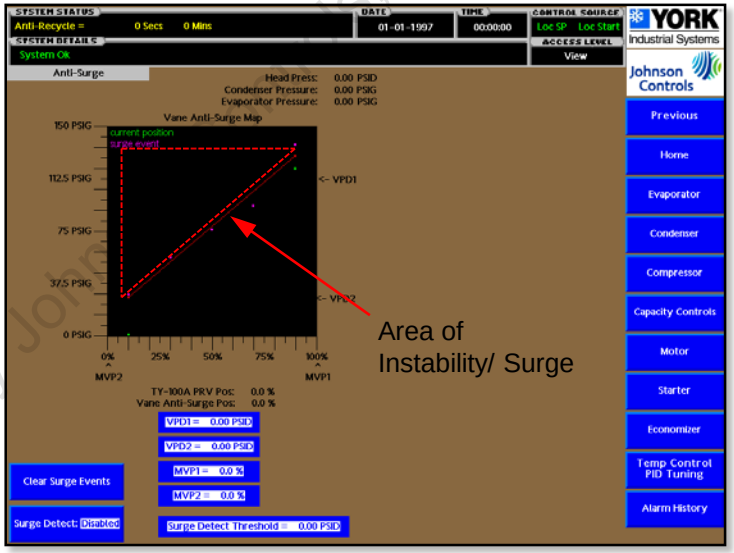

Area of Instability/ Surge

Anti-surge parameters must be determined experimentally during the commissioning procedure. Values shipped with the unit are only default.

Copyright 2017 by Johnson Controls, Inc.

Check Your Understanding—3

Which of the following are applicable when excessive surges are detected in a 5 minute period?

- [x] The chiller will trip
- [x] Message is displayed in the system details banner and is recorded in the alarm history
- [ ] Chiller will start making noise
- [ ] None of the above

Copyright 2017 by Johnson Controls, Inc



Motor Screen

- Home Screen
- Manual/Auto Station Screen
- System Screen
- Evaporator Screen
- Condenser Screen
- Compressor Screen
- Capacity Controls Screen
- **Motor Screen**
  - Motor Starter Screen
  - Gearbox Screen
- Trip Status Screen
- Trend Screen

- Displays information pertaining to an electro-mechanical starter
- Allows changing the demand limit set point value
- Serves as a gateway to the motor starter and gearbox sub-screens

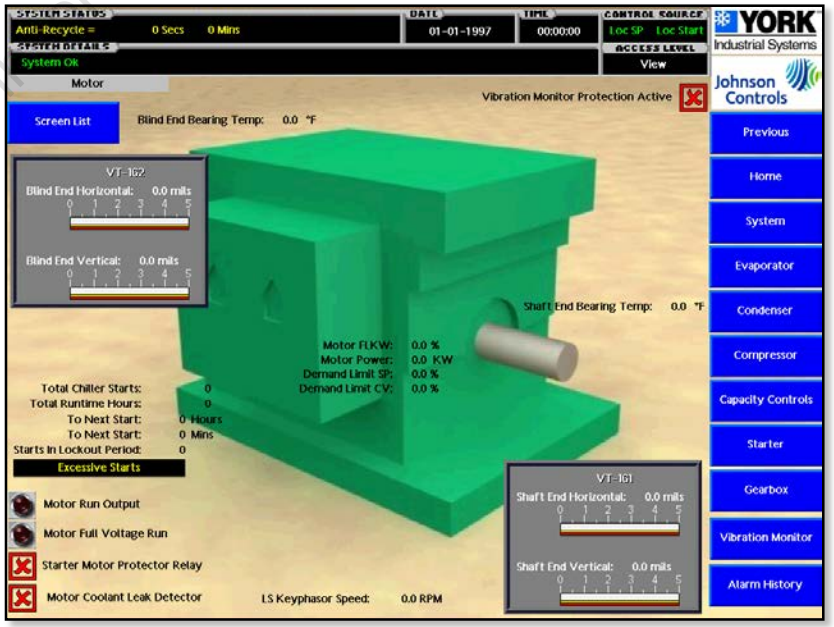

Copyright 2017 by Johnson Controls, Inc

Motor Starter Screen

- Home Screen
- Manual/Auto Station Screen
- System Screen
- Evaporator Screen
- Condenser Screen
- Compressor Screen
- Capacity Controls Screen
- Motor Screen
  - Motor Starter Screen
  - Gearbox Screen
- Trip Status Screen
- Trend Screen

- Optional informational screen
- Shows the basic parameters
- Controls runtime and anti-recycle timers

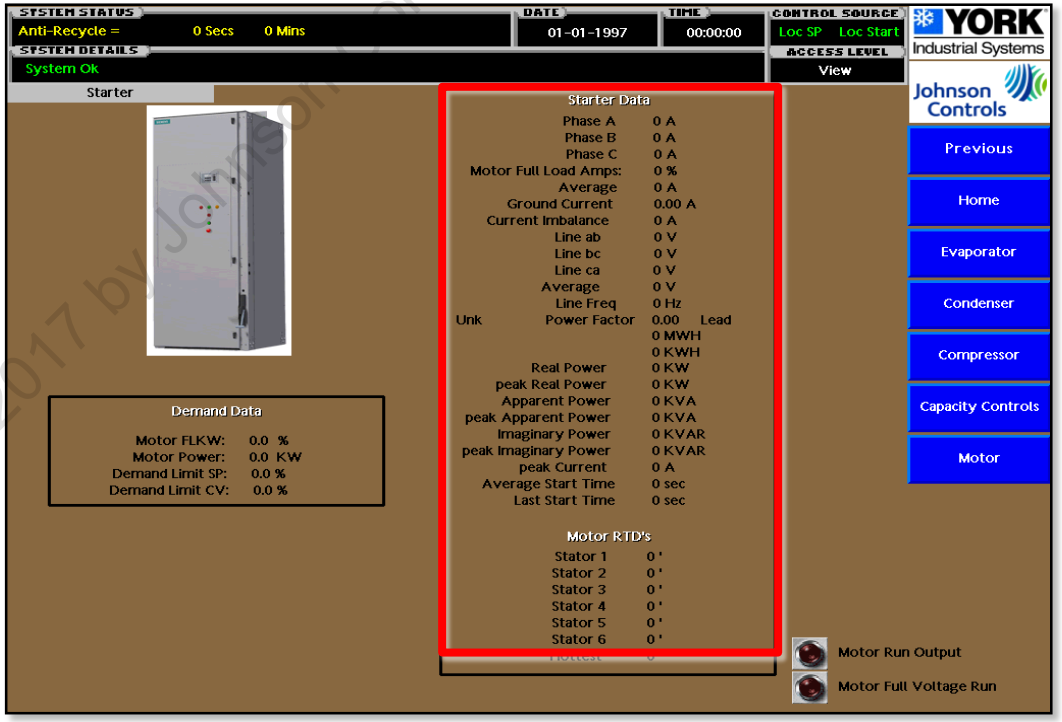

Copyright 2017 by Johnson Controls, Inc

Our Policy prohibits printing. Save GREEN.

Gearbox Screen

- Home Screen
- Manual/Auto Station Screen
- System Screen
- Evaporator Screen
- Condenser Screen
- Compressor Screen
- Capacity Controls Screen
- Motor Screen
  - Motor Starter Screen
  - Gearbox Screen
- Trip Status Screen
- Trend Screen

- Displays major components and temperature, pressures and outputs for the gearbox lubrication system
- Allows manual control of auxiliary oil pump on availability for up to 10 minutes

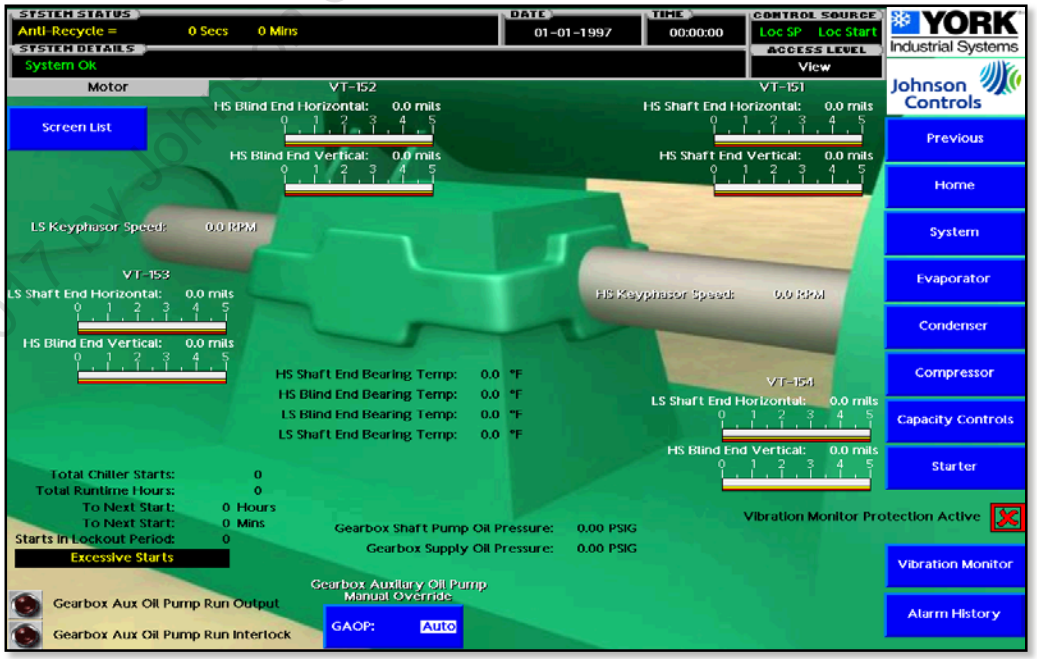

Copyright 2017 Johnson Controls, Inc.

Trip Status Screen

- Home Screen
- Manual/Auto Station Screen
- System Screen
- Evaporator Screen
- Condenser Screen
- Compressor Screen
- Capacity Controls Screen
- Motor Screen
- Trip Status Screen
- Trend Screen
- Alarm History Screen
- Setup Screen

Provides a list of major parameters recorded the instance the chiller is tripped by any safety device.



Copyright 2017 Johnson Controls, Inc.

Trip Status Screen (Cont'd.)

What is the purpose of TRIP 2 – TRIP 5 buttons?

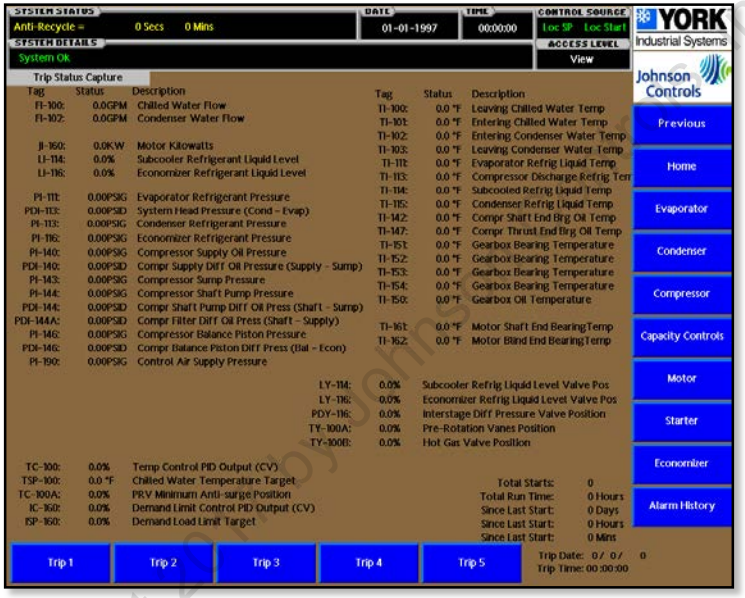

TRIP 1 shows the most recent trip. **TRIP 2, TRIP 3, TRIP 4** and **TRIP 5** show subsequently older trip value captures.

It is advisable to record desired data prior to downloading a revised program as any revised program downloaded to the PLC replaces the residing trip status files.

Copyright of York Johnson Controls Inc

Motor Screen

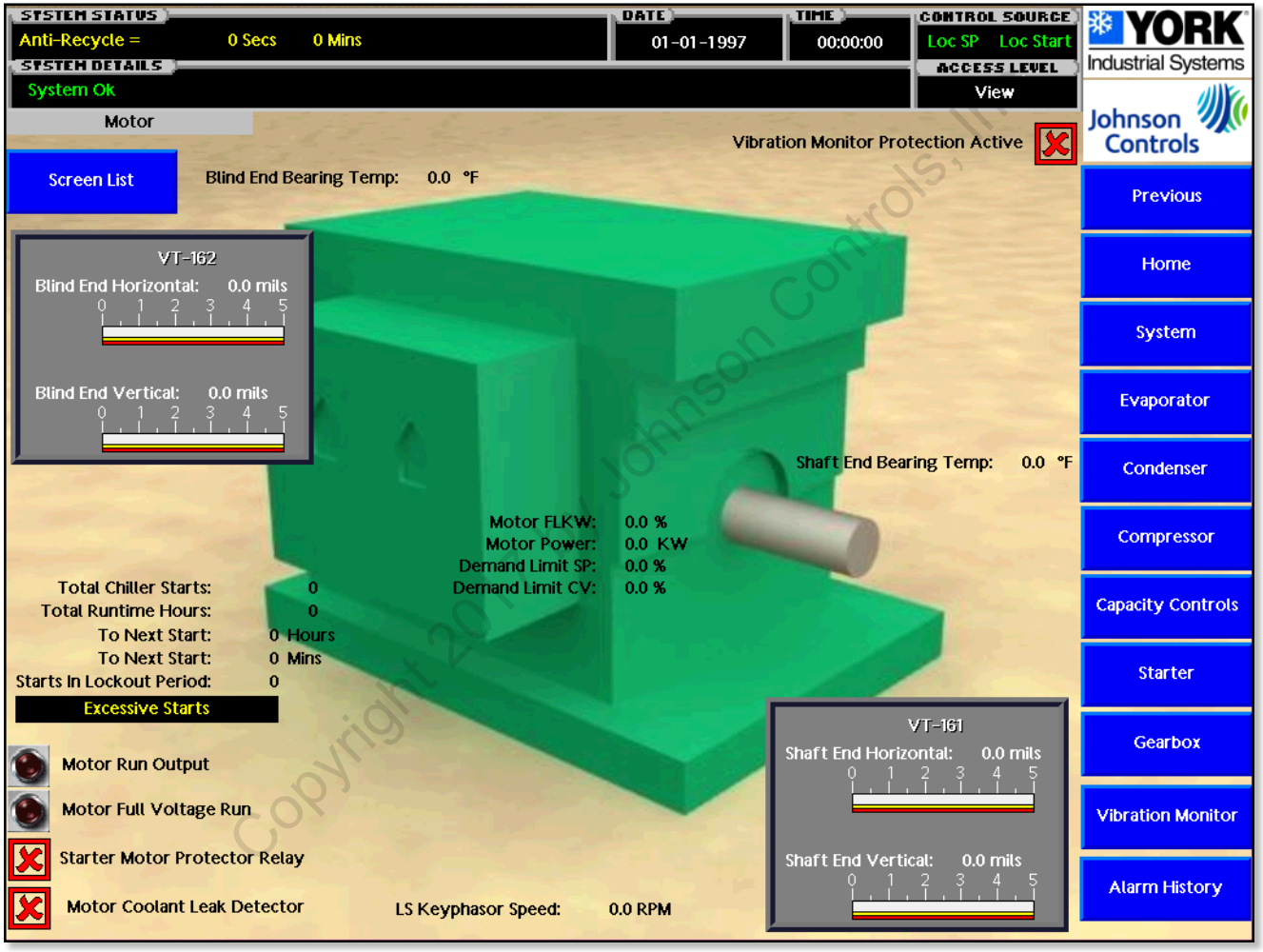

Trend Screen

- Home Screen
- Manual/Auto Station Screen
- System Screen
- Evaporator Screen
- Condenser Screen
- Compressor Screen
- Capacity Controls Screen
- Motor Screen
- Trip Status Screen
- Trend Screen
- Alarm History Screen
- Setup Screen

Provides a graphical display of sensor values over the entire period of chiller operation

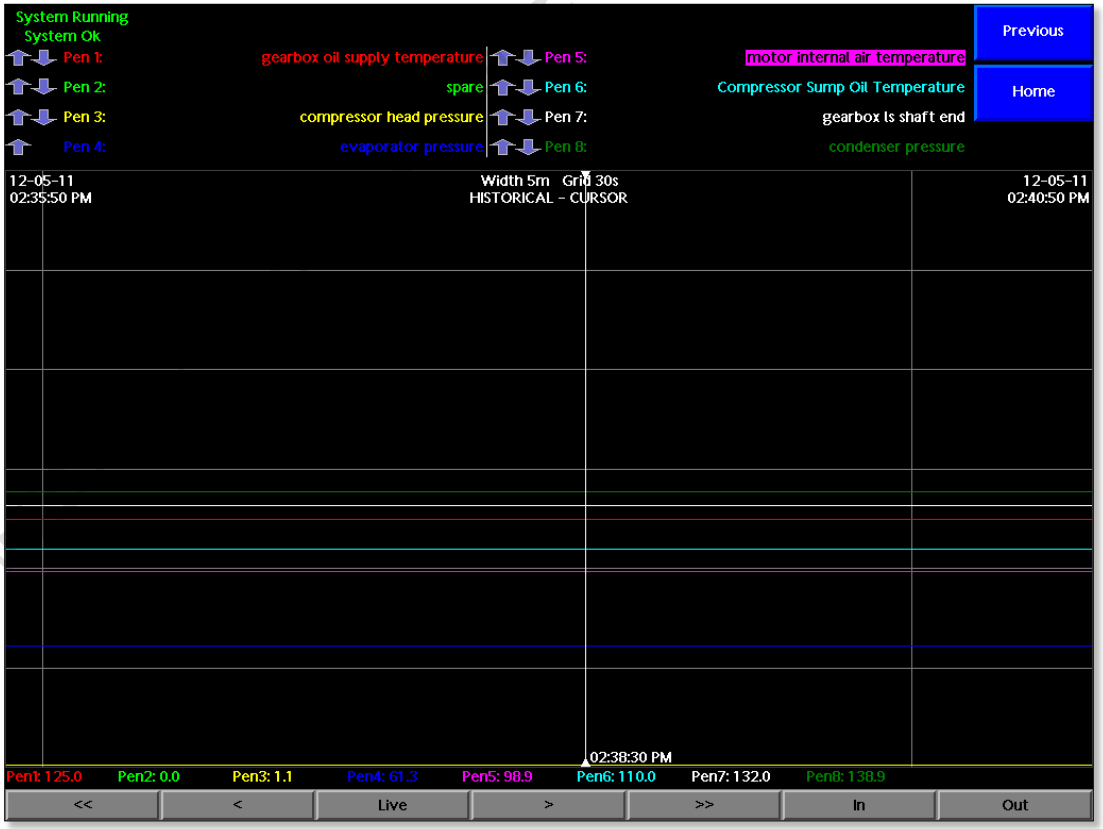

Copyright

Alarm History Screen

- Home Screen
- Manual/Auto Station Screen
- System Screen
- Evaporator Screen
- Condenser Screen
- Compressor Screen
- Capacity Controls Screen
- Motor Screen
- Trip Status Screen
- Trend Screen
- Alarm History Screen
- Setup Screen

Provides a comprehensive report of all system events

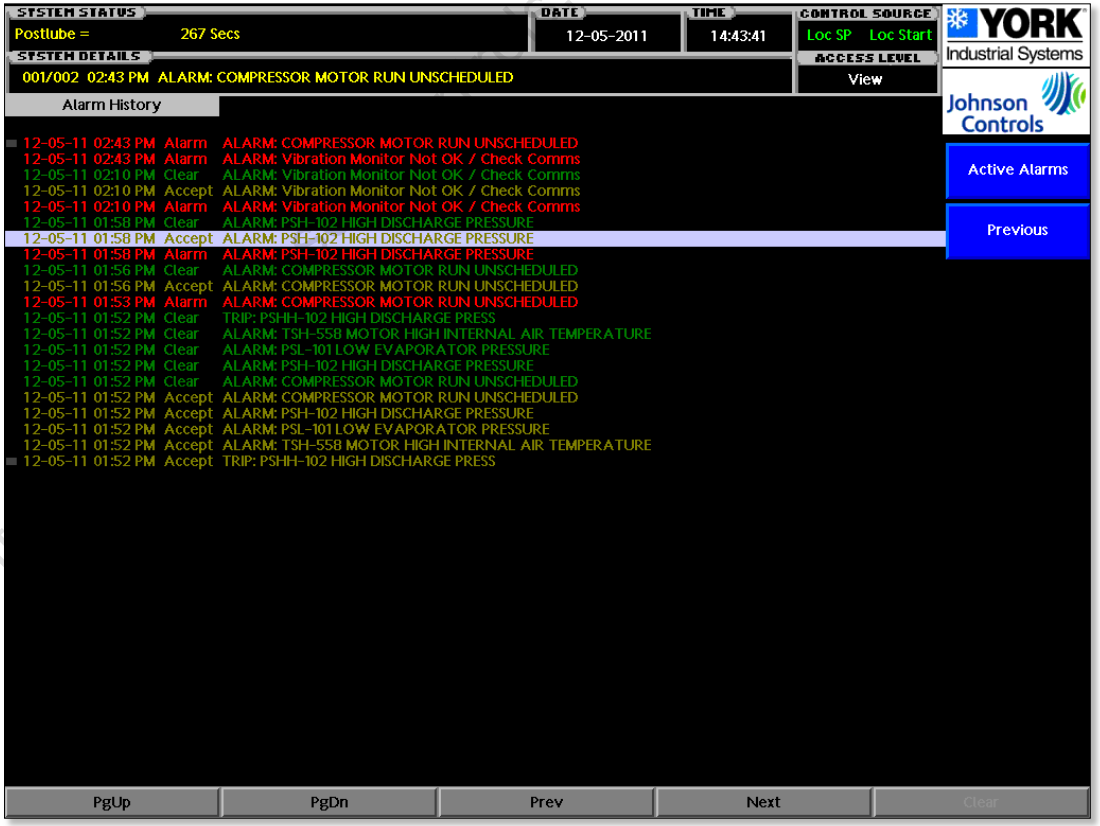

Copyright © Johnson Controls, Inc

Setup Screen

- Home Screen
- Manual/Auto Station Screen
- System Screen
- Evaporator Screen
- Condenser Screen
- Compressor Screen
- Capacity Controls Screen
- Motor Screen
- Trip Status Screen
- Trend Screen
- Alarm History Screen
- Setup Screen

Allows programming the most common set points involved in the chiller control

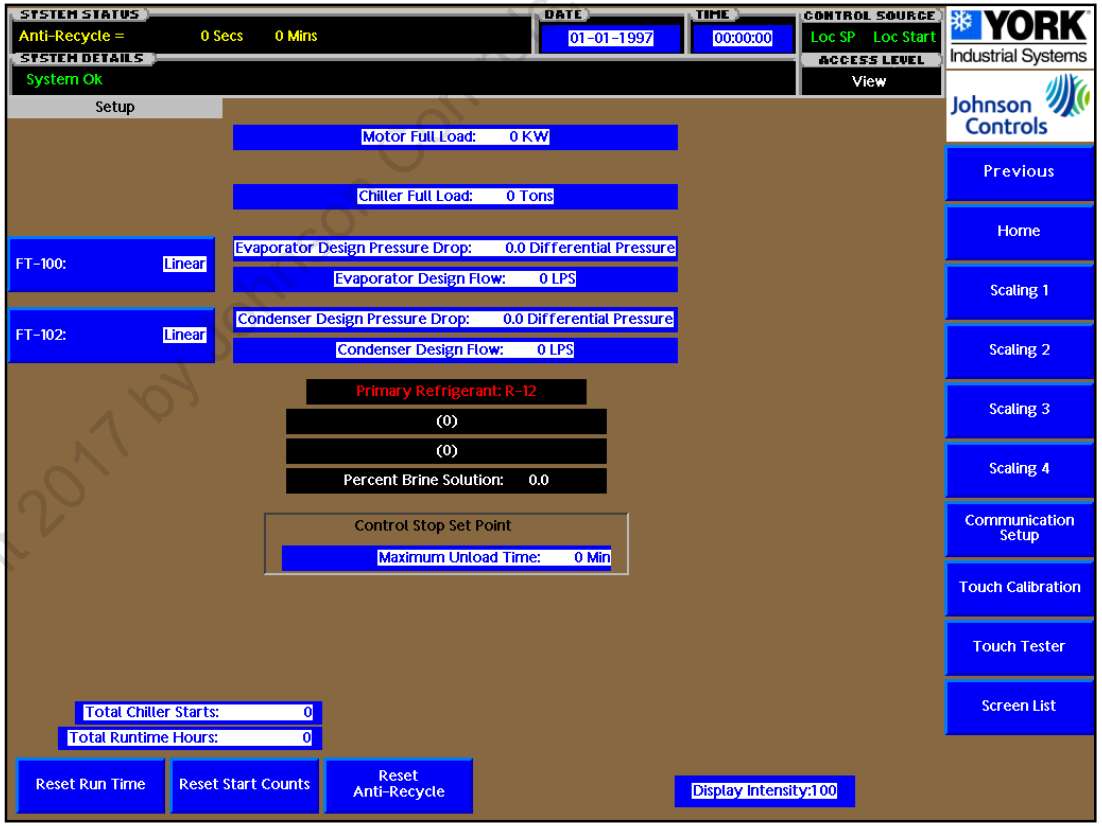

Copyright 2017 by Johnson Controls, Inc

PID Tuning Screens

- Allow the PID tuning parameters to be configured for each device
- PID controls are configured using the following controls:
  - SP = Set point
  - P = Proportional
  - I = Integral Gain/Reset Time (Minutes/Repeat)
  - D = Derivative Gain/Rate (Minutes)

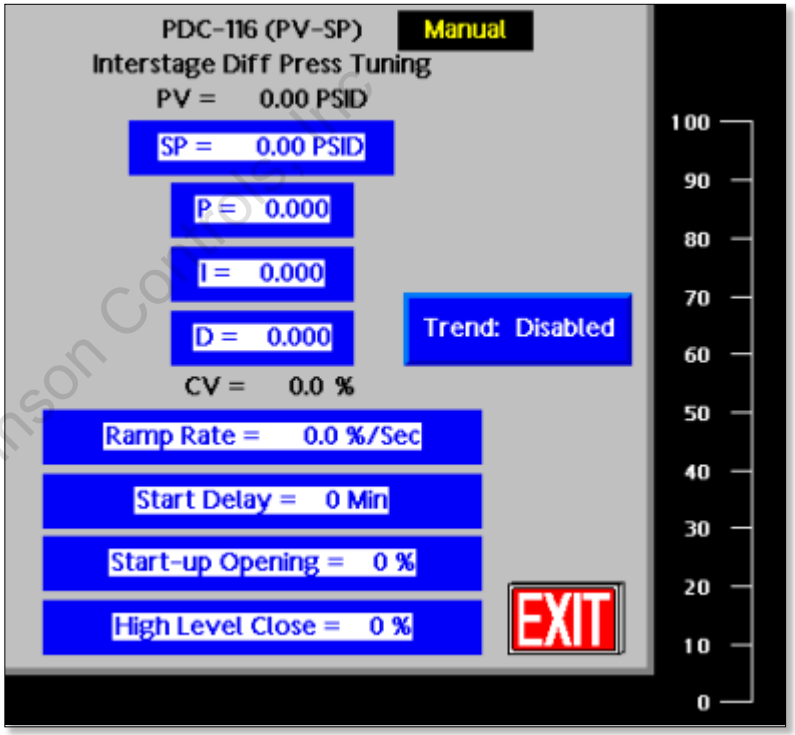

Copyright 2017 by Johnson Controls Inc

All tuning should be performed by the Johnson Controls Service Technician at the time of chiller commissioning.

PID Tuning Screens (Cont'd.)

Economizer PID Tuning Screen

- Helps adjust the economizer level set point

Interstage Differential Pressure PID Tuning Screen(s)

- Help adjust the interstage differential pressure set point

Temperature Control PID Tuning Screen

- Controls the PRVs pre-rotation vanes and the hot gas bypass valve to maintain the leaving chilled liquid temperature set point

Subcooler PID Tuning Screen

- Uses Zone 1/Zone 2 controller to enable a variable reaction system to better control refrigerant level

Copyright 2017 by Johnson Controls, Inc

Vibration Monitor Set Points Screen

- Is an optional feature
- Proximity probes are monitored by a monitoring system

The Thrust Probe requires a zeroing calibration procedure during commissioning.



Danger

Safe operation of the chiller, and warranty claims are compromised by unauthorized changes.

Copyright 2017 by Johnson Controls, Inc

Scaling Screen

- Allow the user to manipulate the behavior of the sensory instruments
- Available only under the highest access level



Copyright 2017 by Johnson Controls, Inc

Screen List Screen

List of available screens in the HMI application



Copyright 2014 by Johnson Controls Inc

Sales Order Screen

Configurable screen listing all sales order information



Copyright 2017 by Johnson Controls Inc

Should be filled by field service during chiller commissioning

Any Questions?



Copyright 2017 by Johnson Controls, Inc

Key Takeaways

In this topic, you learned that:

- Chiller operations follow a general operating sequence for system startup and shutdown
- Monitoring motor load and condenser, evaporator, and intercooler pressures ensure safe chiller operation
- Ramp-up feature provides a gradual increase in chiller capacity during startup
- PRVs and the Hot Gas bypass valve control chiller cooling capacity
- Control system controls all aspects of chiller operation
- Control center continually advises the user of the operating conditions by various status and warning messages
- Service technicians use certain screens, displayed values, programmable set points and manual control to control chiller operations
- Screen accessibility is governed by the access level
- Chiller operations are governed by monitored operational parameters and manually controlled system and system set points



Copyright © 2017 Johnson Controls, Inc.

M Compressor_SitePreparation



Copyright 2017 by Johnson Controls, Inc.

Topic Objectives

OM Installation

1. Site Preparation
2. Assembly
3. Alignment
4. Commissioning

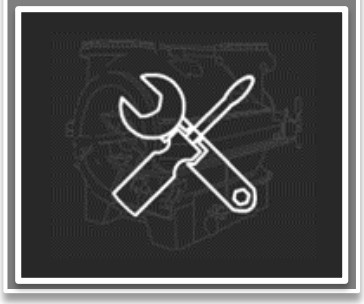

At the end of this lesson, you will be able to:

- Identify the tasks involved in preparing the site for a new chiller assembly
- Describe the steps in assembling the various components of the chiller
- Align the M Compressor to the driver
- Determine the activities necessary for commissioning the M Compressor

Copyright 2017 by Johnson Controls, Inc

Topic Objectives

OM Installation

1. Site Preparation
2. Assembly
3. Alignment
4. Commissioning

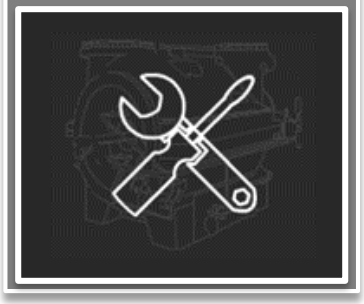

In this topic, we will discuss the following tasks that are a part of site preparation:

- **Inspecting** the shipment
- **Unloading** the shipment
- **Storing** the unit
- Verifying the **location**
- Checking the **bases**
- Ensuring adequate **clearances**

Copyright 2017 by Johnson Controls, Inc

Discussion—Challenges in Site Preparation

What challenges have you encountered in getting a site ready for assembling a new chiller?

Copyright 2017 by Johnson Controls, Inc



Site Preparation Activities

Inspecting the Shipment {Form 160.72-N1 (304)}

Inspecting the shipment



Unloading the shipment



Storing the unit



Verifying the **location**



Checking the **bases**

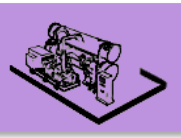

Ensuring adequate **clearances**

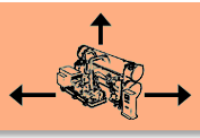

Copyright 2017 by Johnson Controls, Inc

Shipment Inspection



Damaged Parts

- Note any damage or signs of damage on the unit and report them to the transportation company immediately for their inspection
- Take photographs with a good quality camera and ensure that each picture has a date/time stamp
- Contact the YORK® office and file for damage claims with the assistance of a representative



Missing Parts

- Check if all major pieces, boxes, and crates are received
- Open all the containers and check contents against the packing lists
- Report any material shortage to JCI YORK® International immediately
- Put all the content on the floor and take pictures of the condition in which parts were received

Copyright 2017 by Johnson Controls Inc.

Discussion—Damage Inspection

Refer to the images provided and answer the following questions:

- What part of the unit is damaged?
- What is the extent of the damage?
- Can the damage be fixed?


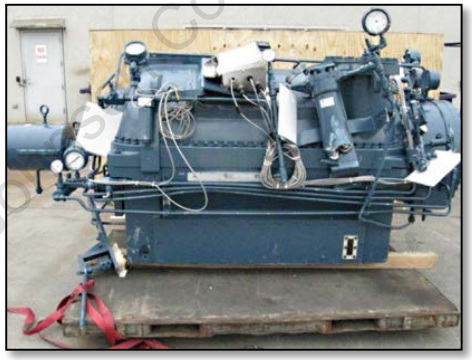



Johnson Controls, Inc

Damaged Parts—Image 1



Damage caused by the chiller coming off the low bed trailer.
The external part of the chiller (power panel and control panel) has been damaged. This can be fixed by ordering new parts and is charged against the transportation company.

Copyright © by Johnson Controls, Inc.

Damaged Parts—Image 2

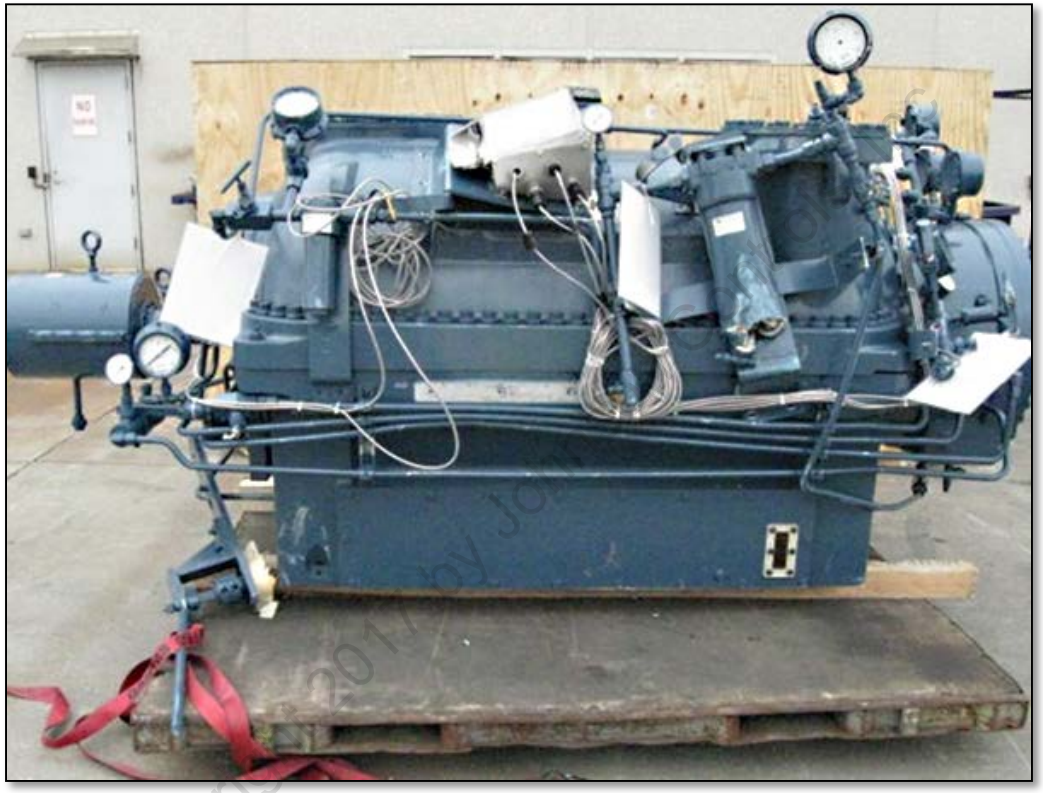

This looks like outside/external damage, but the inside is also damaged by the shear force of hitting the ground. This damage cannot be fixed. Therefore, it is easier to just scrap it due to insurance, and order a new one. The scrap is worth $US 700,000 to 1MM.

Damaged Parts—Image 3



This unit landed with so much force that all the parts have tilted over. The shaft is damaged because of the impact with which it hit the ground. In this case, the whole thing has to be taken apart and rebuilt from scratch.

Damaged Parts—Image 4



Sheared Steel Pipe

This unit bounced off the hooks and then turned onto its side when it was dropped. The internal rotor and bearings will have had at least a one time Gravity (G) damage and are possibly scrap. This compressor has to be torn down to the point where the compressor shell (casing) has to be re-pressure tested, and the rotor re-checked and re-balanced. In brief, you would have to build the compressor again and check every single part. This entails a lot of cost.

Copyright 2017 by Johnson Controls, Inc

Site Preparation Activities

Unloading the Shipment

Inspecting the shipment

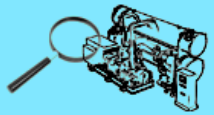

Unloading the shipment



Storing the unit



Verifying the **location**



Checking the **bases**

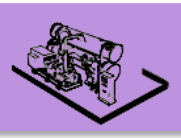

Ensuring adequate **clearances**

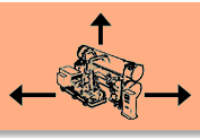

Copyright 2017 by Johnson Controls, Inc

Unloading

DOs

- Cover all openings to avoid affecting the warranty
- Use sheet metal, plastic, or solid sheets of rubber of sufficient size and shape
- Check the pressure gauges to verify that there is still pressure in the units

DON'Ts

- Do NOT use cloth rags or other materials that may fall into the components
- Do NOT open the covers of the evaporator, condenser, intercooler, and compressor until they are ready for installation pipe work because they are pressurized

Copyright 2017 by Johnson Controls, Inc

Protect the unit from all foreign substances during the unloading process.

Site Preparation Activities

Storing the Unit

Inspecting the shipment

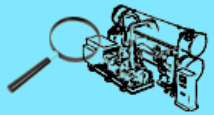

Unloading the shipment



Storing the unit



Verifying the **location**



Checking the **bases**

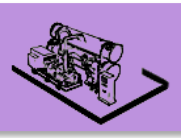

Ensuring adequate **clearances**

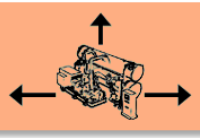

Copyright 2017 by Johnson Controls, Inc

Storage

- Special storage provisions are necessary if the unit needs to be stored for **more than six months** or in case of **approaching adverse weather**. (Form 50.20-NM1)



- **Compressor, gear, and motor drives** should be slightly rotated by hand to prevent damage to the bearings (1” – 2”)



- **Control panel, driveline assembly, and oil** must be stored indoors.



- If the **component piping and parts** cannot be stored indoors, they should be covered by a tarp for protection from temperature extremes. (Broken pipes have occurred)



- **A monthly log sheet** showing the condition of all components, including any damage, corrosion, or leaks should be sent to the YORK® office. (Form 50.20-CL5)



Copyright 2017 by Johnson Controls, Inc.

Storing a Unit

Ensure Water Proof and Wind Proof Protection



Copyright 2 Johnson Controls, Inc

Note the two types of tarp—blue and black. The blue tarp is lighter, while the black tarp is heavy, weather-proof, and then tied by good quality ropes.

Security in Storage

In addition to protecting the unit from foreign particles and weather extremes, **ensure the unit is secure**.

Sometimes, it might be necessary to hire a shipping container to store parts and equipment. (This is to keep the parts from being stolen.)

Copyright 2017 by Johnson Controls, Inc



Example: In Canada, it was found that someone had cut out the Allen Bradley control system from the control panel.

Site Preparation Activities

Verifying the Location

Inspecting the shipment

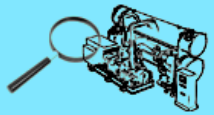

Unloading the shipment



Storing the unit



Verifying the **location**



Checking the **bases**

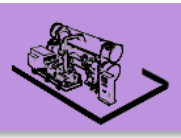

Ensuring adequate **clearances**

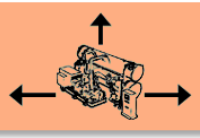

Copyright 2017 by Johnson Controls, Inc

Location



Verify that the location meets the following requirements:

- A ground floor is recommended.



- Is capable of supporting the combined operating weights of the driveline, vessels, and point loads.
  Reference Drawing (077-32303-000 sheet 3)



- Meets all local building codes and requirements.



- Is properly ventilated or has scope for future ventilation.



- Has future serviceability options such as for removal of parts.



If you notice that the location does not meet any of the above requirements, inform the Project Manager.

Copyright 2017 by Johnson Controls, Inc

Site Preparation Activities

Checking the Bases

Inspecting the shipment

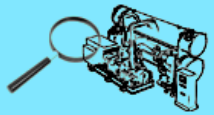

Unloading the shipment



Storing the unit



Verifying the **location**



Checking the **bases**

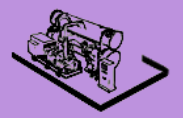

Ensuring adequate **clearances**

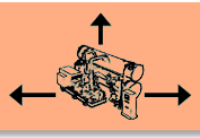

Copyright 2017 by Johnson Controls, Inc

Base

Reference - 160.71-N1.1

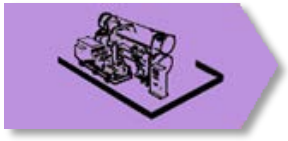

Could be a level floor or a raised housekeeping pad (plinth)

- Should be capable of supporting the total weight of the operating unit.



- Anchor bolts are recommended in case of steam turbine drive.



- Spring isolators are recommended if the chiller is located on an upper floor.

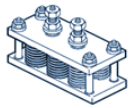

- If the chiller is installed on a grade, it may be directly mounted to the foundation using embedded anchor bolts and grouting.



- A non-shrinking epoxy grout should be poured under all full depth base members and the structural driveline base.



Copyright 2017 by Johnson Controls, Inc

Foundation—Example 1



Cement pads for all parts of the chiller The pads are 1 foot thick, only 2 or 3 inches are visible above the ground. The rest is under the ground.

Our Policy prohibits printing. Save GREEN.

Foundation—Example 2



Cement pads for all parts of the chiller

Site Preparation Activities

Ensuring Adequate Clearances

Inspecting the shipment

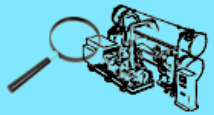

Unloading the shipment



Storing the unit



Verifying the **location**



Checking the **bases**

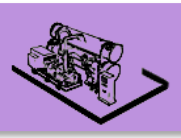

Ensuring adequate **clearances**

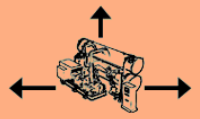

Copyright 2017 by Johnson Controls, Inc

Components Requiring Clearances

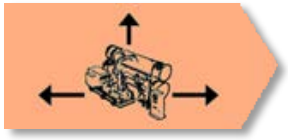

Clearances are required:

- Above and along all sides of the unit
- At the end of the heat exchangers
- Beyond the compressor sump
- At the removable access cover of the motor terminal boxes
- In front of the control panel
- Around the intercooler

Copyright 2017 by Johnson Controls, Inc

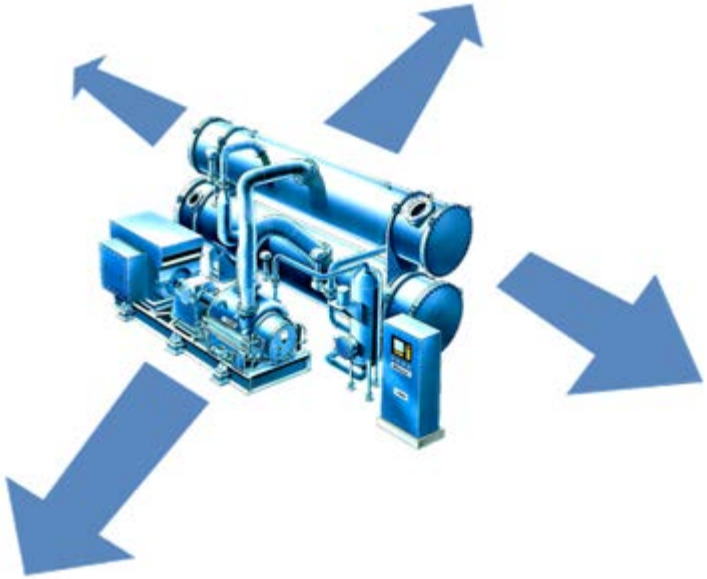

Minimum Clearance Requirements

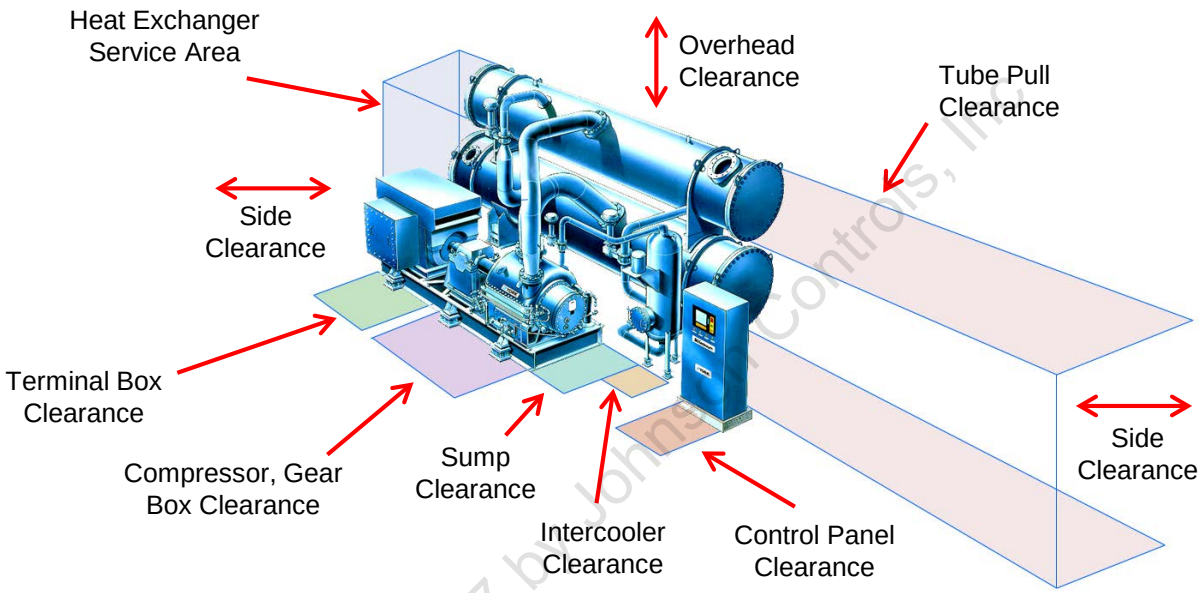

Copyright 2017 by Johnson Controls, Inc.

Heat Exchangers: 4 feet for service on opposite tube pull drawing specs for tube pull. Drawing 077-32303-000 sheet 2

Control Panel: Appropriate for door swing and access

Sump: 24” beyond the sump to access internal pump and bearing

Terminal Box: 3 feet (914 mm) for removing access cover

Overhead and Side Clearance: 24” above and along all sides of the unit

Overhead Clearance

Overhead clearance is required to allow use of a “manlift,” as ladders are not allowed on this type of machine due to safety concerns.



8000 Ton OM

Discussion: Inadequate Clearances

While checking clearances for various parts, you notice that a foundation for another unit is placed in the tube pull clearance area. What do you do?

Work with the customer to discuss service options.

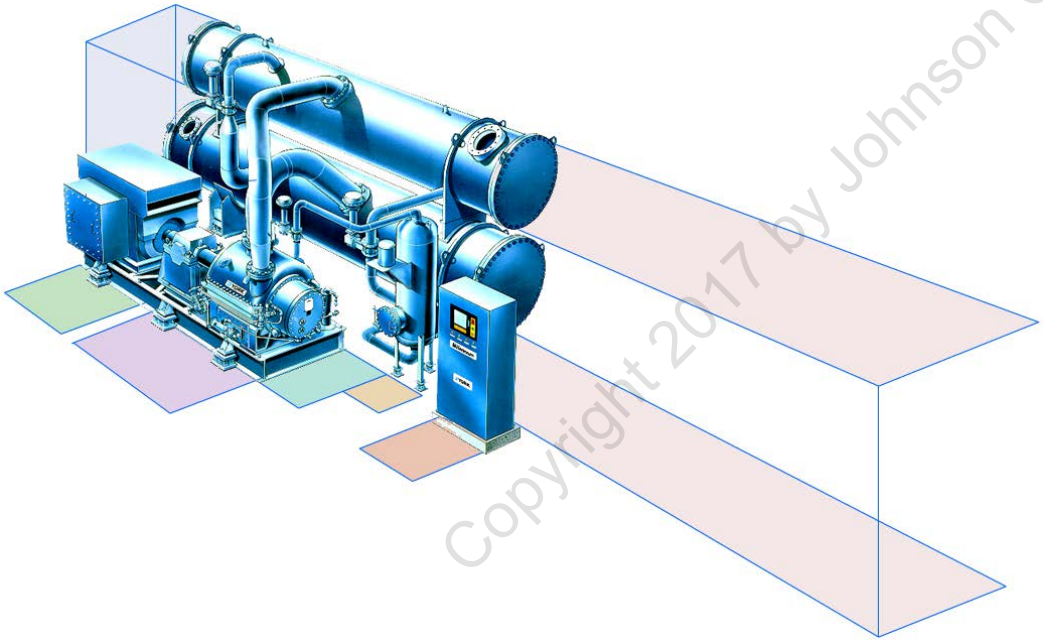



Copyright 2017 by Johnson Controls, Inc.

Check Your Understanding—1

During the inspection of a shipment on arrival, you come across some damaged parts and also find that two components are missing according to the packaging list. Who will you inform about the damaged and missing parts?

- ☐ Project Manager
- ☐ Transportation company
- ☐ YORK® office, local office, and product support office
- ☑ All of the above



Copyright 2017 by Johnson Controls, Inc.

Check Your Understanding—2

Which of the following materials should be used to prevent foreign material from entering the components?

- [x] Sheet metal
- [x] Plastic sheets
- [ ] Cotton rugs
- [ ] None of the above

Copyright 2017 by Johnson Controls, Inc



Check Your Understanding—3

Which of the following components should always be stored indoors?

- ☐ Condenser
- ☑ Control panel
- ☑ Driveline assembly
- ☑ Oil
- ☐ Evaporator

Copyright 2017 by Johnson Controls, Inc



Check Your Understanding—4

You observe the following about the location and foundation of the site where a new OM chiller is to be installed. Which of the following adhere to the suggested guidelines?

- ☑ The unit is located on the ground floor.
- ☑ The foundation is capable of supporting the total operating weight of the unit.
- ☐ The location is adjacent to a commercial area.
- ☑ Grout has been poured under the driveline.

Copyright 2017 by Johnson Controls, Inc.



Check Your Understanding—5

What should the minimum clearance be for each of the following?

- ☐ Overhead clearance **8 feet**
- ☐ Terminal box clearance **3 feet**
- ☐ Sump clearance **2 feet**
- ☐ Tube pull clearance **See drawing**
- ☐ Heat exchanger service clearance **4 feet**

Copyright 2017 by Johnson Controls, Inc



Discussion: Inspecting a Site

You have been asked to inspect a site that was prepared for an OM chiller installation at a petrochemical plant.

- What information do you need to have with you to be able to inspect the site and verify that it meets the requirements?
- What are some key points you will examine for each of the following categories:
  - Equipment protection
  - Location
  - Foundation
  - Clearances
  - Compliance
- Share your summary with the larger group

Copyright 2017 by Johnson Controls, Inc

Any Questions?



Copyright 2017 by Johnson Controls, Inc

Key Takeaways

In this topic, you learned that:

- It is in the best interest of Johnson Controls that the technician and the Project Manager be onsite when the shipment arrives for inspection
- Ensure that all material required to protect the equipment, such as plastic sheets, tarp, tapes, etc., is already available on the site
- While inspecting a site, always keep future serviceability options at the back of your mind. This is your opportunity to talk to the customer and discuss what can be done now to make servicing in the future easier
- Think outside the box; at times, you might be required to come up with different ideas on how to get the machine inside the premises



Copyright 2017 Johnson Controls Inc

M Compressor_Assembly

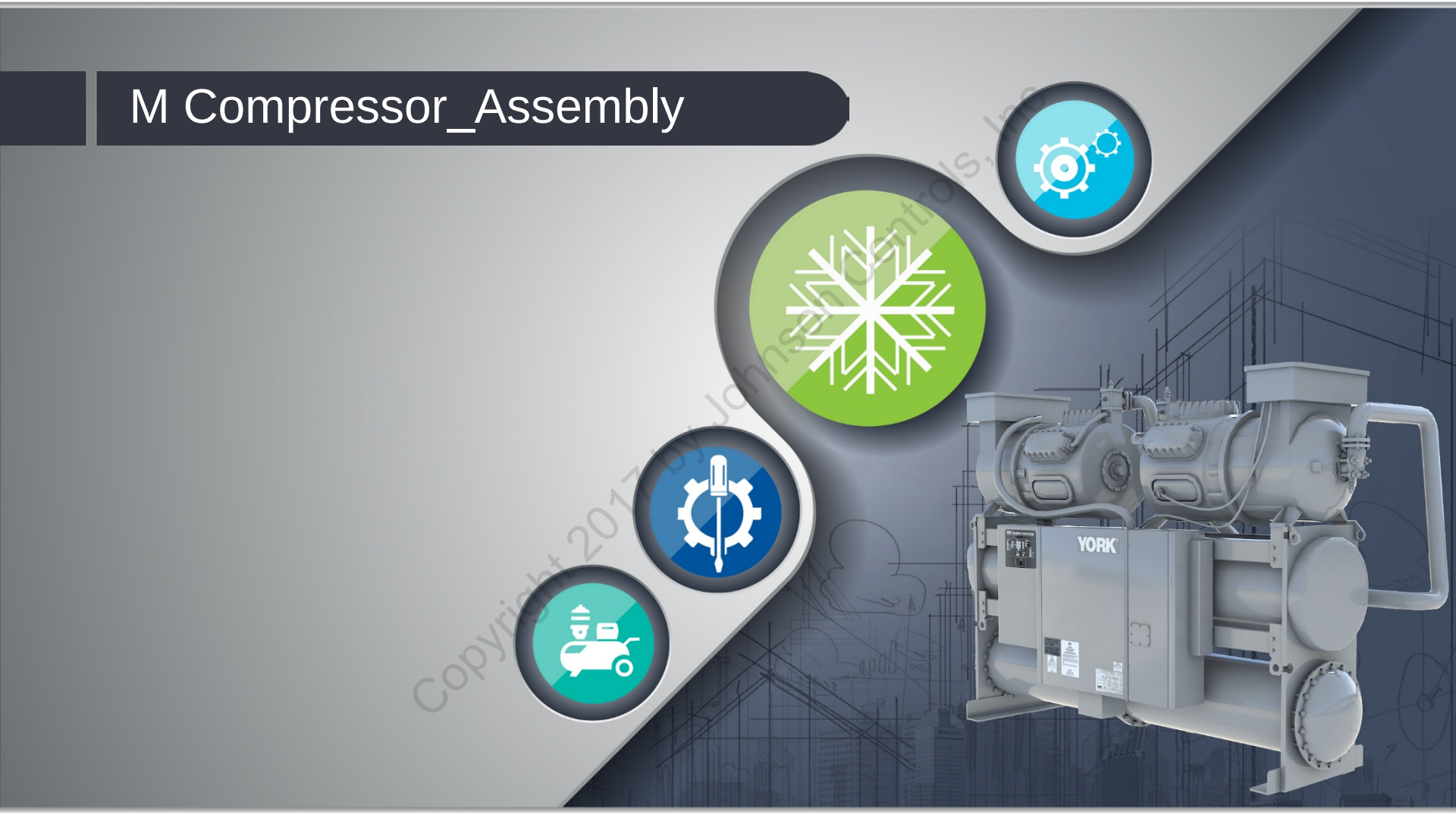

Copyright 2017 by Johnson Controls, Inc.

Topic Objectives

OM Installation

1. Site Preparation
2. Assembly
3. Alignment
4. Commissioning

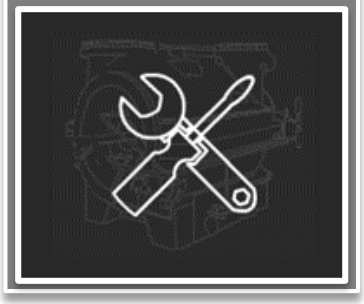

At the end of this topic, you will be able to:

- List the information you need to oversee a chiller assembly.
- Identify the general rigging guidelines for each chiller component.
- Describe the steps involved in assembling the various chiller components.
- Identify the tasks to be performed post-installation.

Copyright 2017 by Johnson Controls, Inc

Your Role in Installation

What role do you play in an installation procedure? What are your key responsibilities?

- Observe the installation performed by contractors
- Ensure that the installation is done according to the drawings and instructions
- Report discrepancies directly to the Project Manager
- Safeguard Johnson Controls' interest



Copyright 2017 by Johnson Controls, Inc

160.72.N1 manual

Installation Tasks

The installation tasks can be categorized as follows:

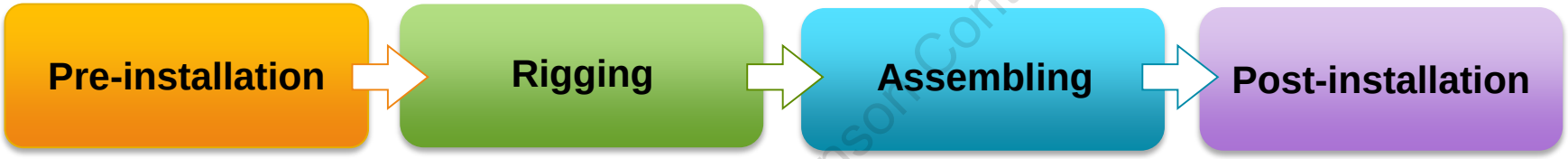

Copyright 2017 by Johnson Controls, Inc

Pre-installation Tasks

The installation tasks can be categorized as follows:

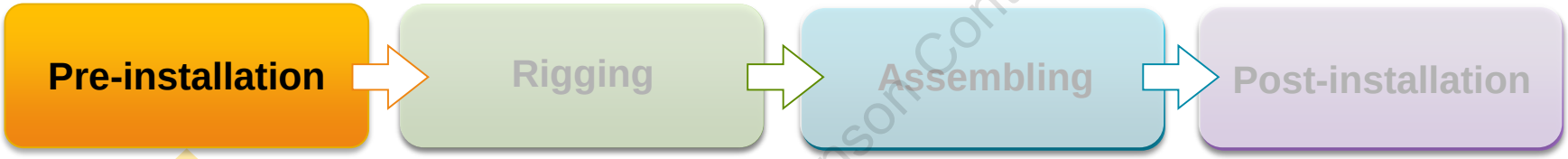

- Ensure that the equipment is well-protected and stored, if required
- Ensure all the reference information is available

Copyright 2017 by Johnson Controls, Inc

Protecting the Equipment

- **Prevent grit or other foreign particles** from entering the unit components during installation.
- **Use sheet metal, plastic, or rubber closures** of sufficient size and shape so they don't fall into the opening.
- **Grounding should be as close as possible to its weld location** to protect against damage due to current flow.
- **Use back-up rings on all welded pipe joints,** which cannot be cleaned from the inside.

Copyright 2017 Johnson Controls, Inc



Reference Information

- General arrangement drawing – 077-32303-000 (5 pages)
- Sectional assembly drawing – 077-32303-000 (5 pages)
- Lubrication system schematic drawing – 081-17944-000
- Oil piping drawing - 381-17975-000
- Coupling instruction – Riverhawk Literature
- Application data sheet
- Relevant YORK® manuals

Copyright 2017 by Johnson Controls, Inc.

Rigging

The installation tasks can be categorized as follows:

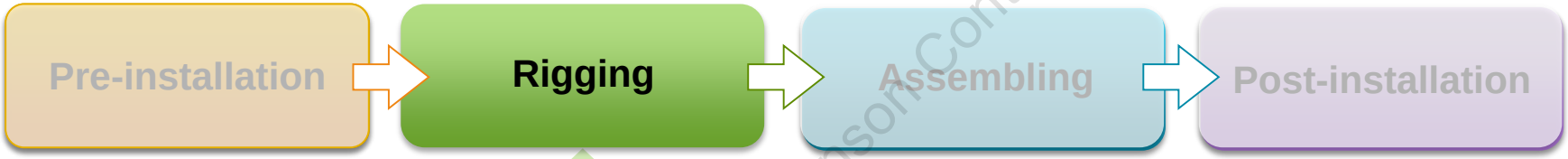

Only qualified rigging personnel should handle the rigging operation. Failure to observe this may result in equipment damage, serious injury, or death!



Copyright 2017 Johnson Controls, Inc

Rigging of an OM Chiller
(077-25017-000)

- Spreader bars
- Everything has been marked, and the bases are ready
- The unit is level



Copyright 2017 by Johnson

Rigging of an OM Chiller (Cont'd.)

In this job, the chiller was put in place and the building built around it.

Note how the openings have been covered by metal coverings



© Johnson Controls, Inc.

Discussion: Rigging

- What are your experiences/problems on rigging for various chillers?

Copyright 2017 by Johnson Controls, Inc



Rigging Guidelines—General

Ensure that the rigging contractor:

- Consults the final construction drawings, job specifications, and weight information
- Uses the proper equipment based on the component weight and rigging method utilized
- Follows the lifting and rigging instructions provided on each piece of equipment
- Does not damage any component during the rigging process
- Follows all safety procedures as applicable

Copyright 2011 by Johnson Controls, Inc



Rigging Guidelines—Evaporator and Condenser

(077-31990-000-sht1)-(077-31991-000-sht1)-(077-25017-000)

Correct

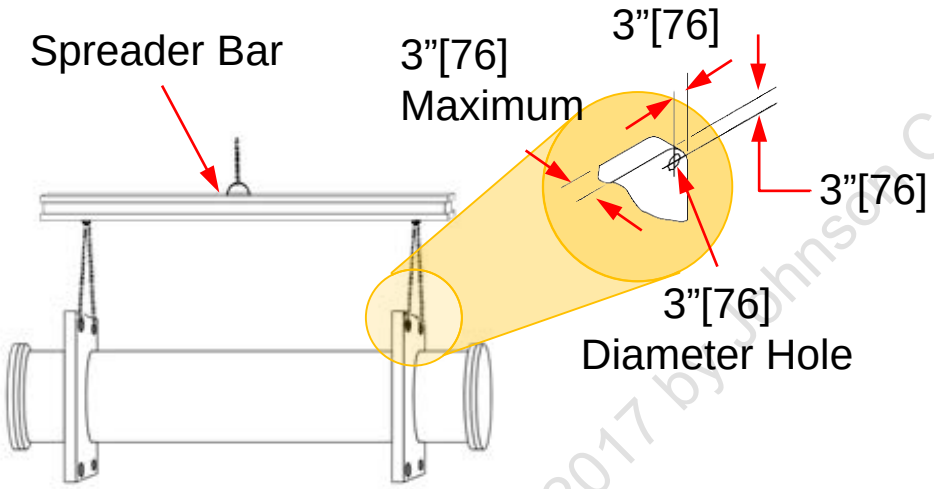

Incorrect

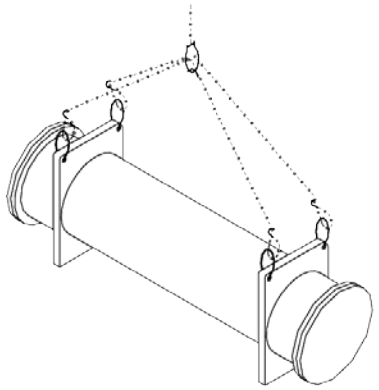

Copyright 2017 by Johnson Controls, Inc

- These should be lifted horizontally
- Use of spreader bars is mandatory
- Note the center of gravity markings from the drawings or the shell
- Chain sizing should be according to the dimensions of the lifting lugs

Rigging Guidelines—Intercooler

(077-31992-000-sht1) - (077-25017-000)

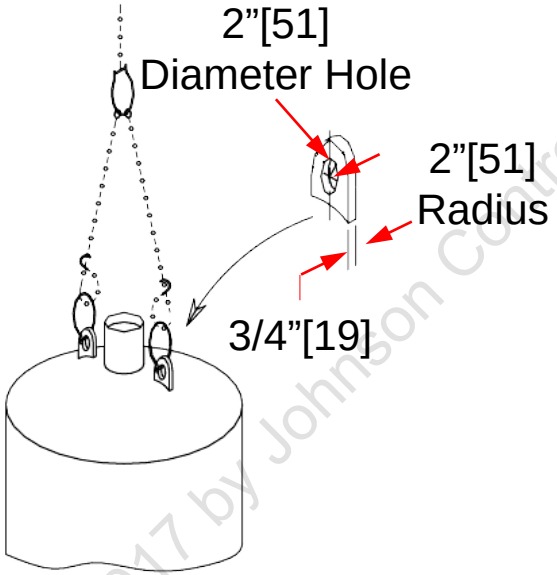

Copyright 2017 by Johnson Controls, Inc

- This should be lifted vertically
- Legs should not be damaged when being lifted to the vertical position
- Chain sizing should be according to the dimensions of the lifting lugs

Rigging Guidelines—Driveline

(077-25017-000)

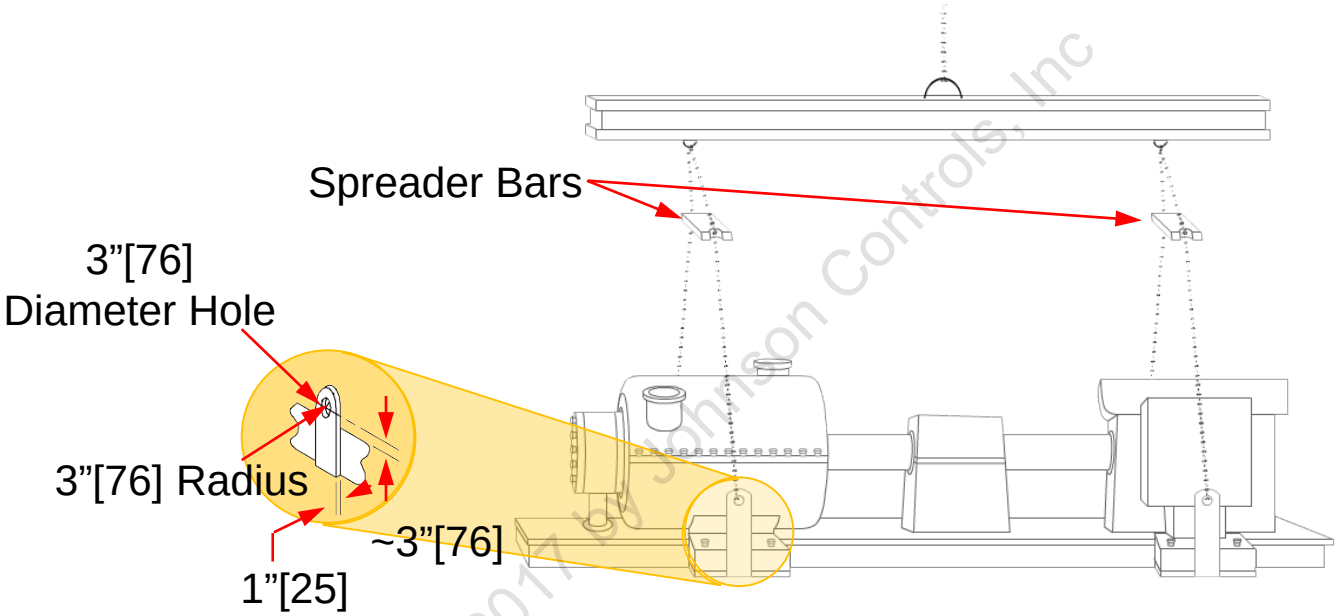

Copyright 2017 by Johnson Controls, Inc

- Lift the driveline horizontally. Keep level at all times
- Use spreader bars
- Note the center of gravity markings from the drawings or on the equipment
- The chain sizing should be according to the dimensions of the lifting lugs

Rigging Guidelines—Compressor

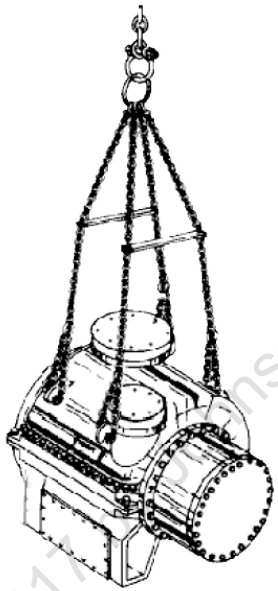

Copyright 2017 Johnson Controls, Inc

- The crane capacity, chain sizing, rigging bar selection, and clevis pin capability must be correctly sized
- Sling vertically using the lifting eyes provided

Discussion: Rigging Best Practices

What are some of the considerations to keep in mind during the lifting of the following components?

- Driveline
- Intercooler
- Evaporator
- Compressor
- Condenser

Copyright 2017 by Johnson Controls, Inc

Assembling

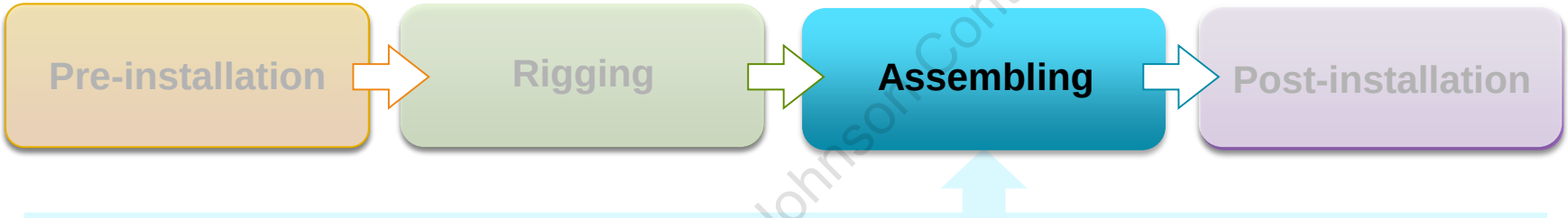

- The foundation where the unit is to be installed must be ready
- Components must be assembled according to the information in the construction drawings

Copyright 2017 by Johnson Controls, Inc

Installation Sequence

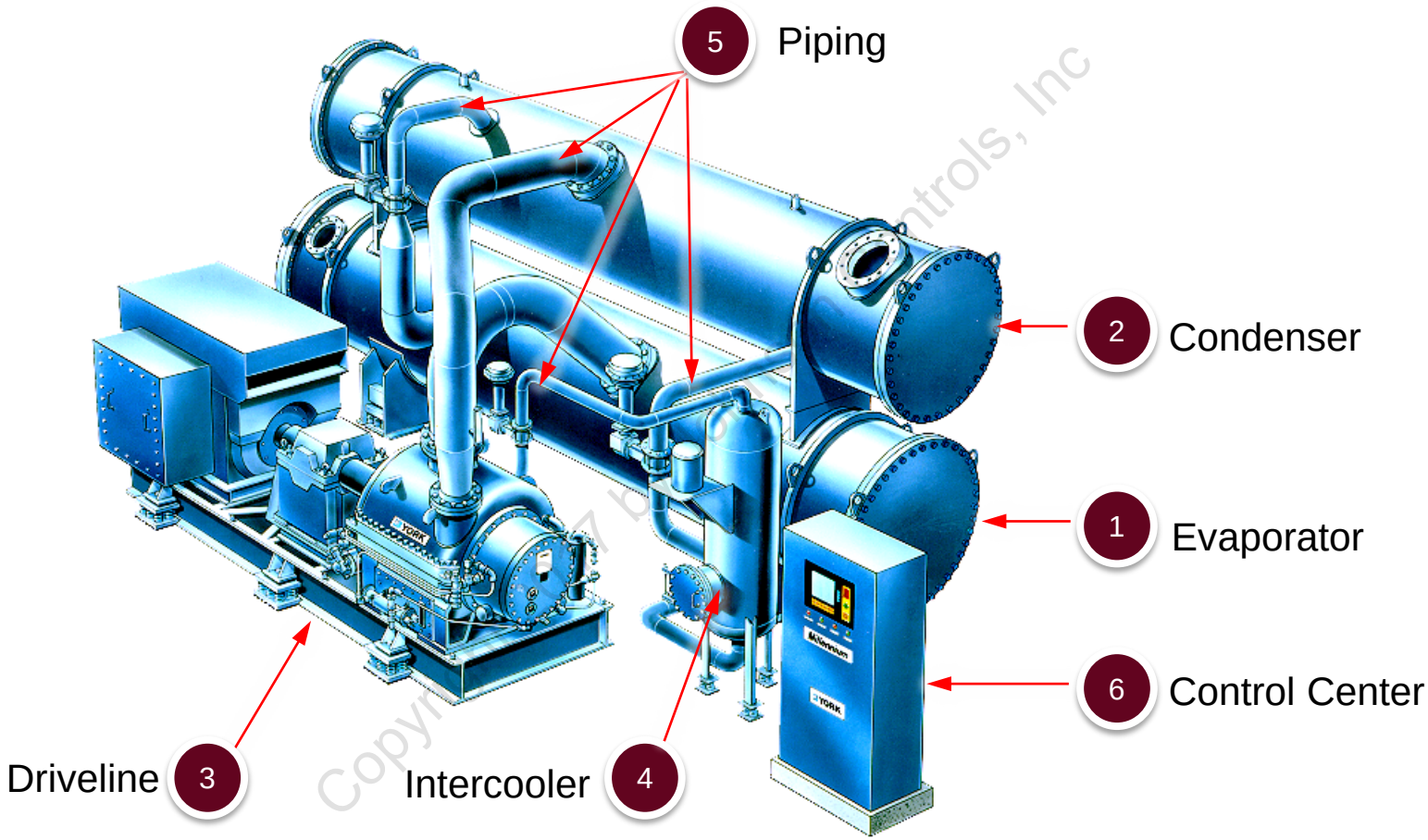

General Installation Steps

1. Mark the location.
2. Provide the elevation.
3. Place the component.
4. Mount the spring isolators, if required.
5. Verify the installation.

Copyright 2017 by Johnson Controls, Inc



Installing the Evaporator

Form 160.72-N1 (304)

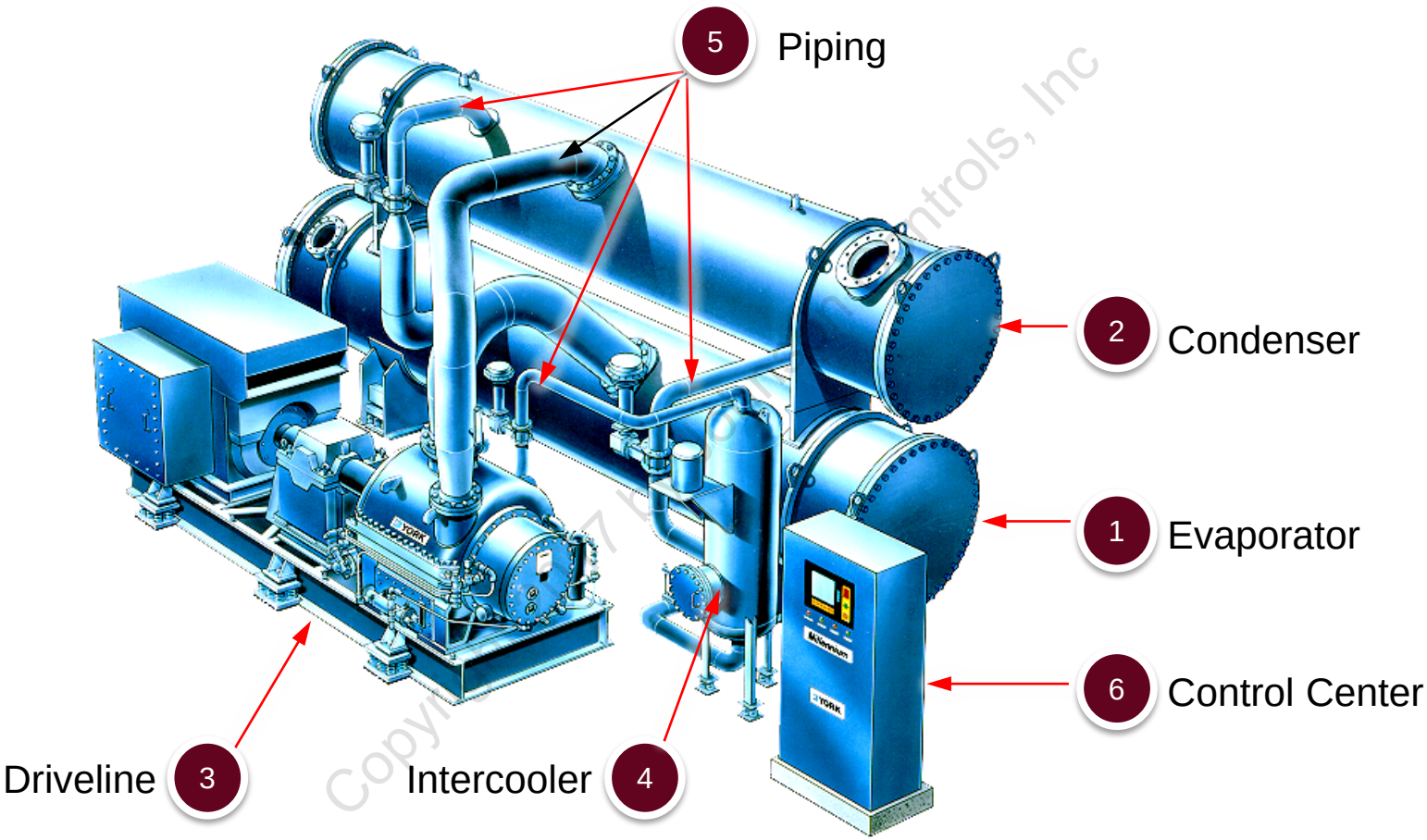

Installing the Evaporator (Cont'd.)

1. Mark the location.

- Move the evaporator into a position near the equipment pad
- Draw the transverse lines and a longitudinal center line on the evaporator section of the floor or equipment pad

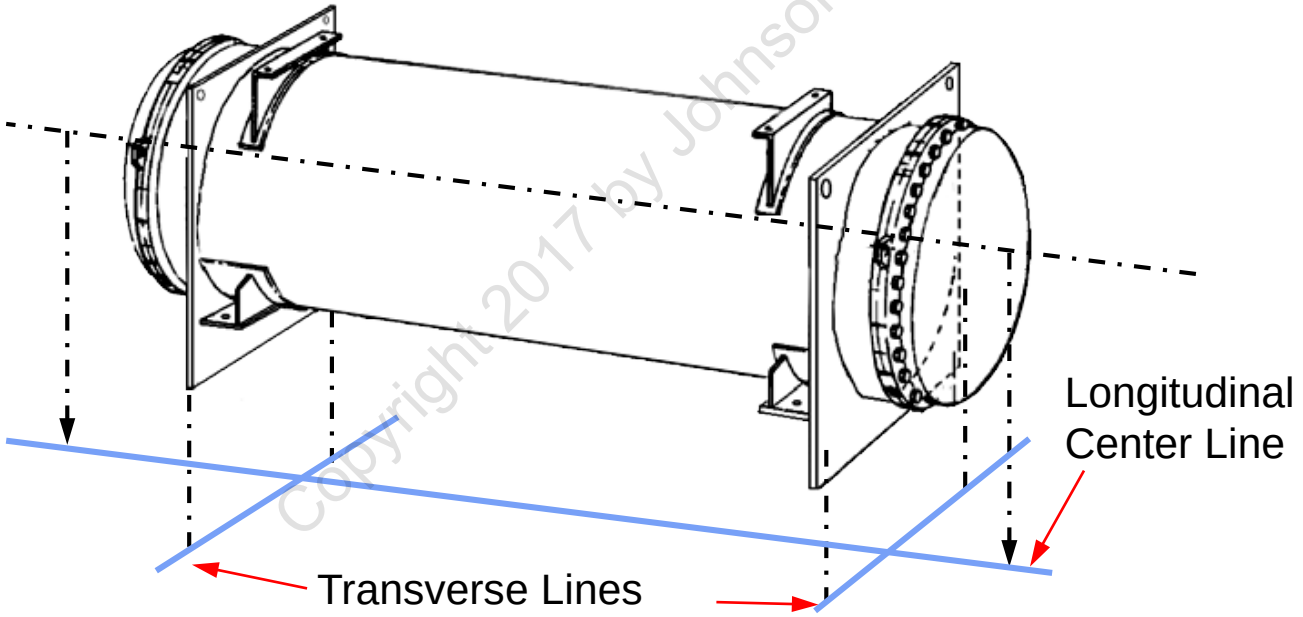

Copyright 2017 by Johnson Controls, Inc

Installing the Evaporator (Cont'd.)

2. Provide the elevation.

- Place 1" (25 mm) thick steel blocks

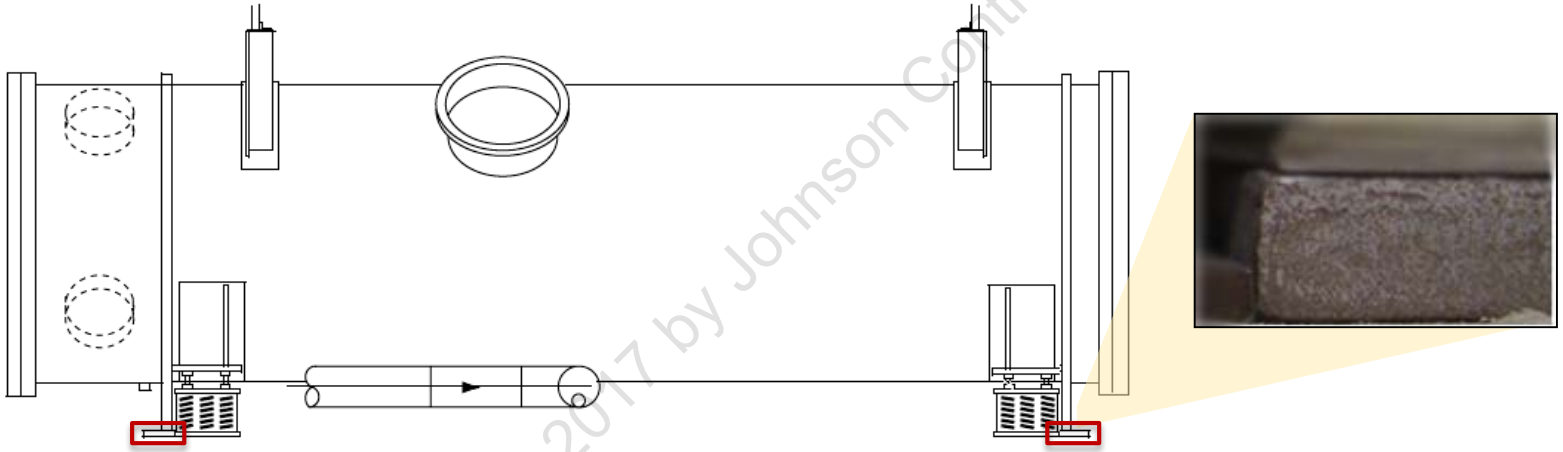

3. Place the component.

- Align the evaporator with the center lines on the floor or equipment pad
- Lower the evaporator onto the steel blocks

Copyright 2017 by Johnson Controls, Inc

Installing the Evaporator (Cont'd.)

(077-32303-000)

4. Mount the spring isolators, if applicable.

- Place the spring isolator mountings in the positions shown on the general arrangement drawing

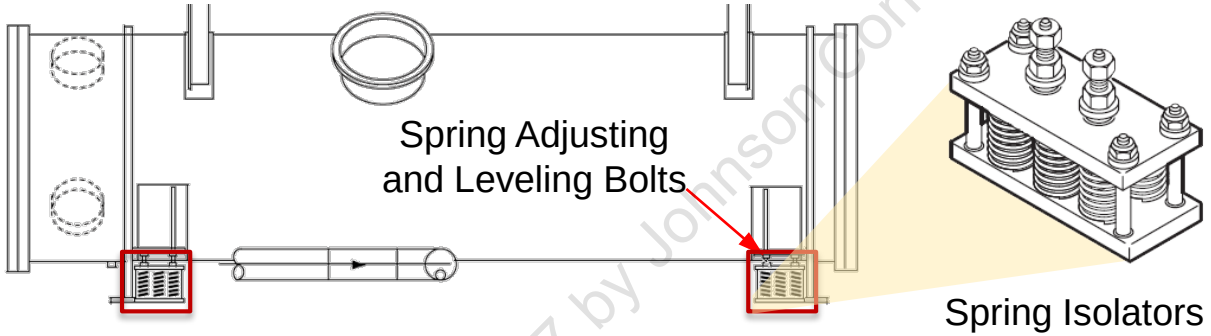

5. Verify the installation.

- Check the evaporator for elevation. (see drawing)
- Level the evaporator lengthwise
- Verify the water nozzle locations

Copyright 2017 by Johnson Controls, Inc

Installing the Condenser

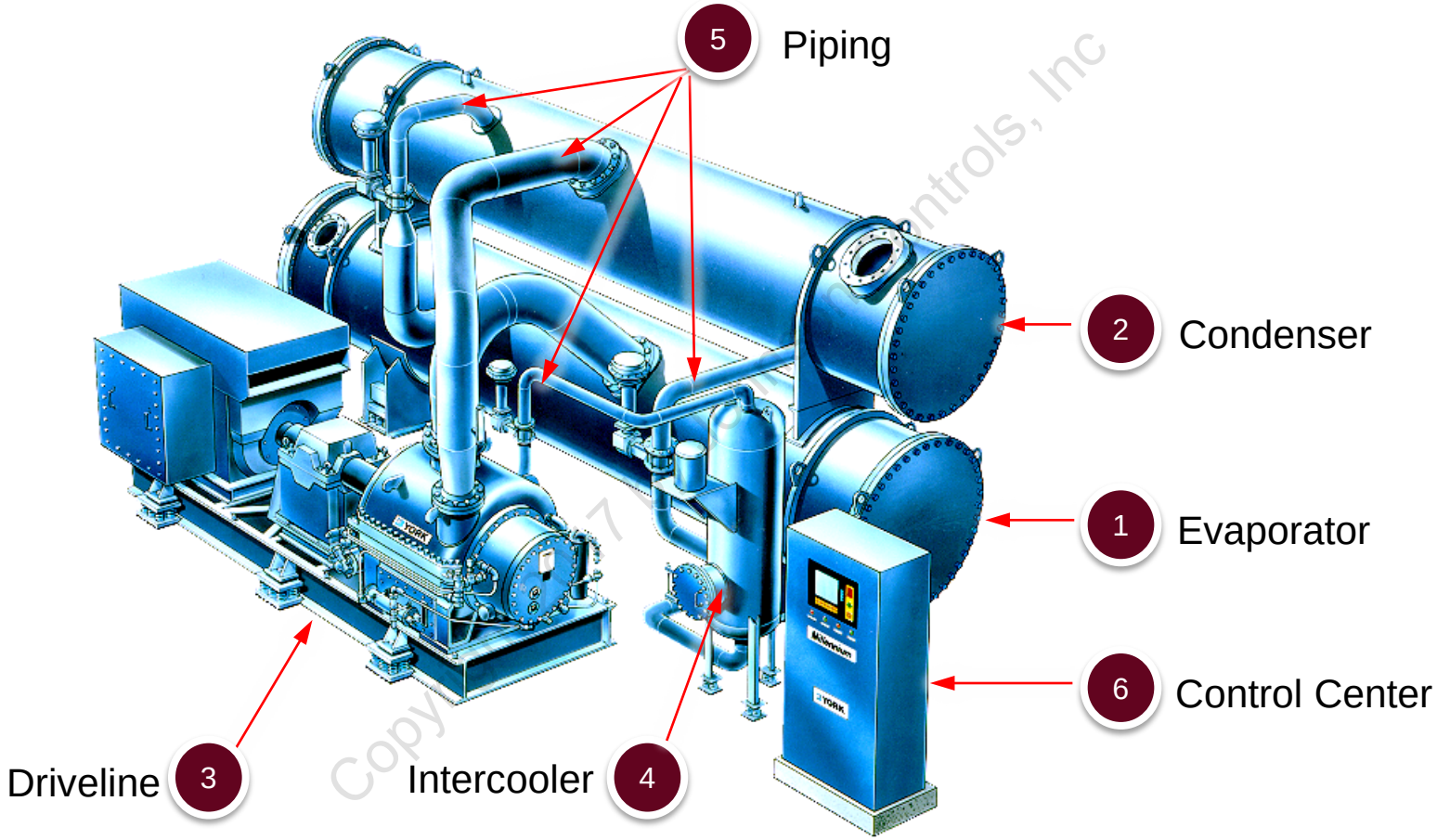

Copyright © 2007 Johnson Controls, Inc

Installing the Condenser (Cont'd.)

1. Place the component.

- Position the condenser on top of the evaporator
  - Ensure that the discharge connection points towards the compressor
- Align and bolt onto its supports on top of the evaporator

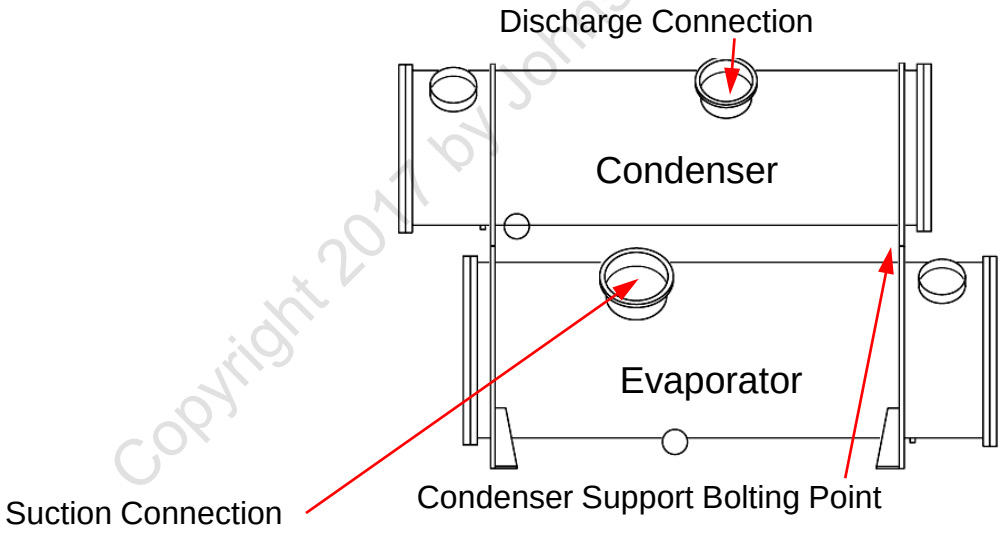

Copyright 2017 by Johnson Controls, Inc

Installing the Condenser (Cont'd.)

2. Verify the installation.

- Verify the water nozzle positions and water piping connections



Copyright 2017 by Johnson Controls, Inc

Installing the Driveline

(077-32079-000)

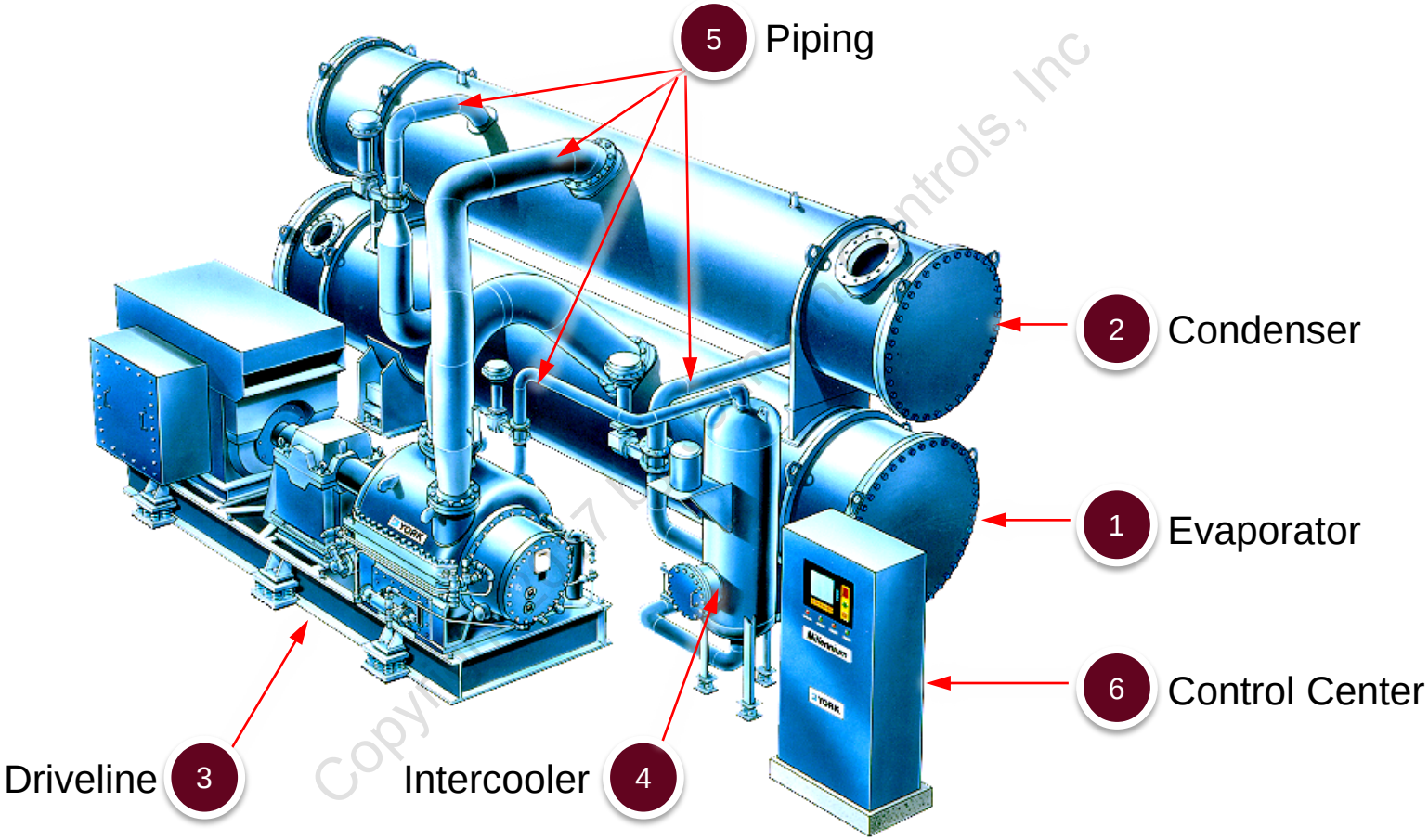

Our Policy prohibits printing. Save GREEN.

Installing the Driveline (Cont'd.)

1. Mark the location.

- Rig the driveline steel base to its location on the foundation

2. Provide the elevation.

- Place 1" (25 mm) thick steel blocks under the jacking screws

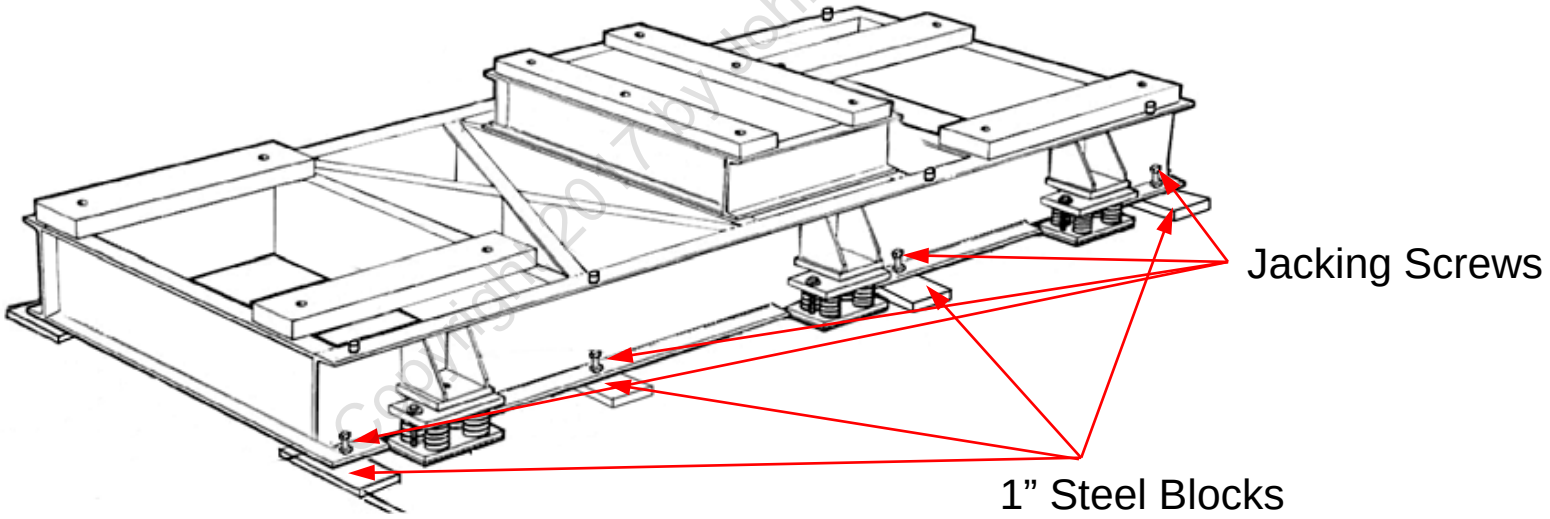

Copyright © 2017 Johnson Controls, Inc

Installing the Driveline (Cont'd.)

3. Level the driveline.

- Ensure the finished datum points are the same as on the factory drawings

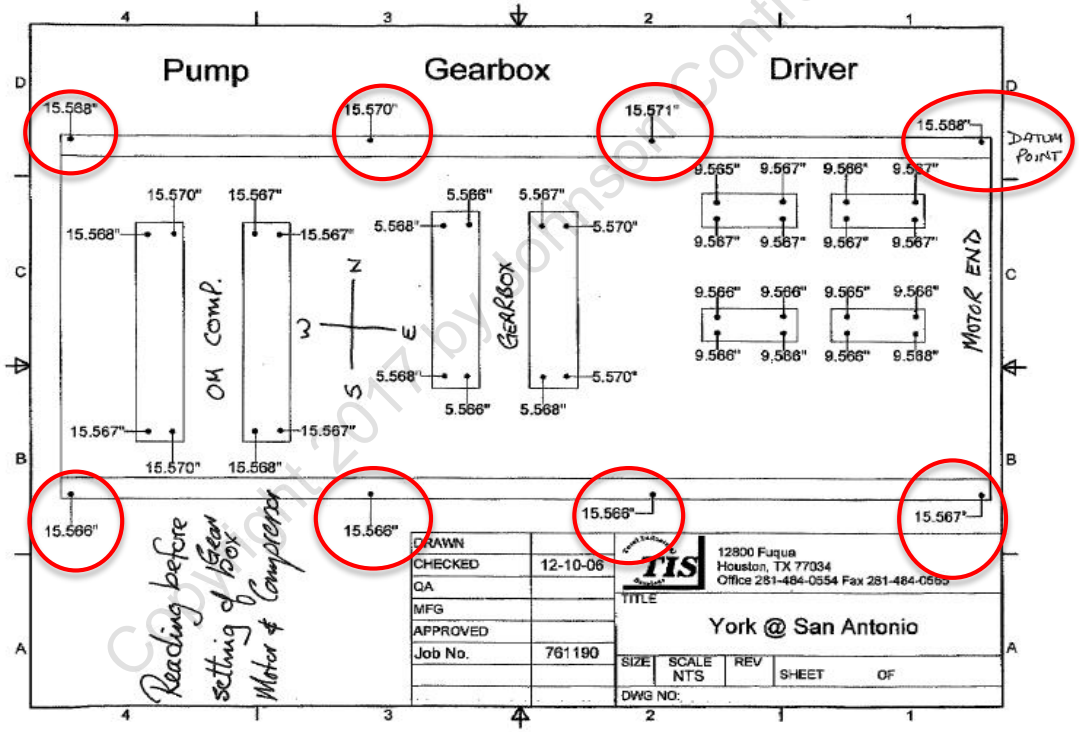

Copyright 2017 by Johnson Controls, Inc

Installing the Driveline (Cont'd.)—Datum Points

2 inch diameter target references



Datum Zero Mark



A 'plus' reading means the point is 0.015" below the datum point.

Copyright 2017 by Johnson Controls Inc

Installing the Driveline (Cont'd.)

4. Mount the spring isolators, if required.

5. Verify the installation.

- Ensure that the 2" (50 mm) diameter machined reference targets are clean
- Verify the reference target readings against the original drawings

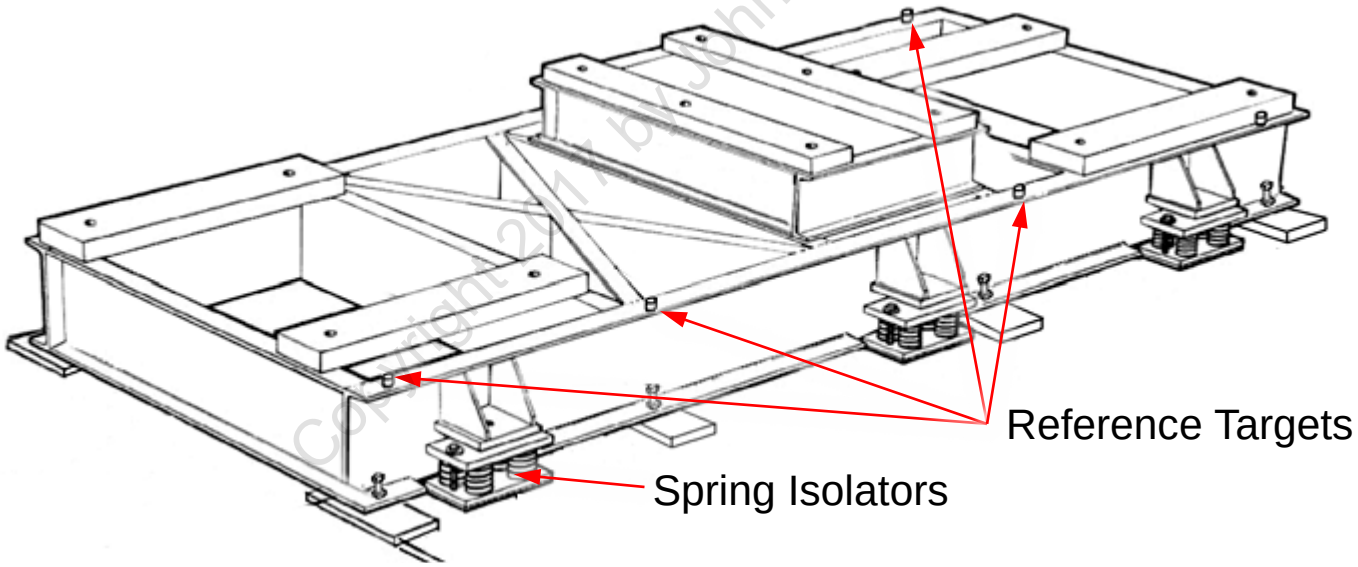

Copyright 2011 by Johnson Controls, Inc

Installing the Driveline (Cont'd.)

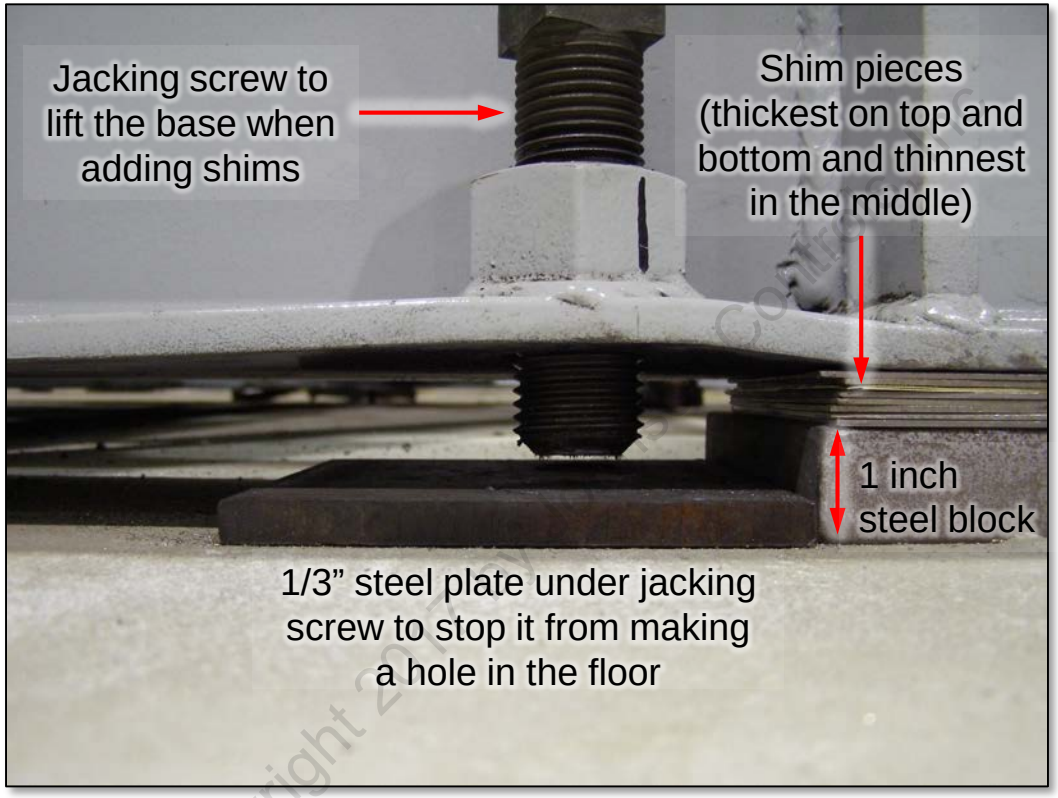

Note: Damage to the base and the position of the steel plate below the jacking bolt. It should not be damaged.

The 1" steel block, which is the required "Shimstock" for leveling the base to the "Targets."

Installing the Intercooler

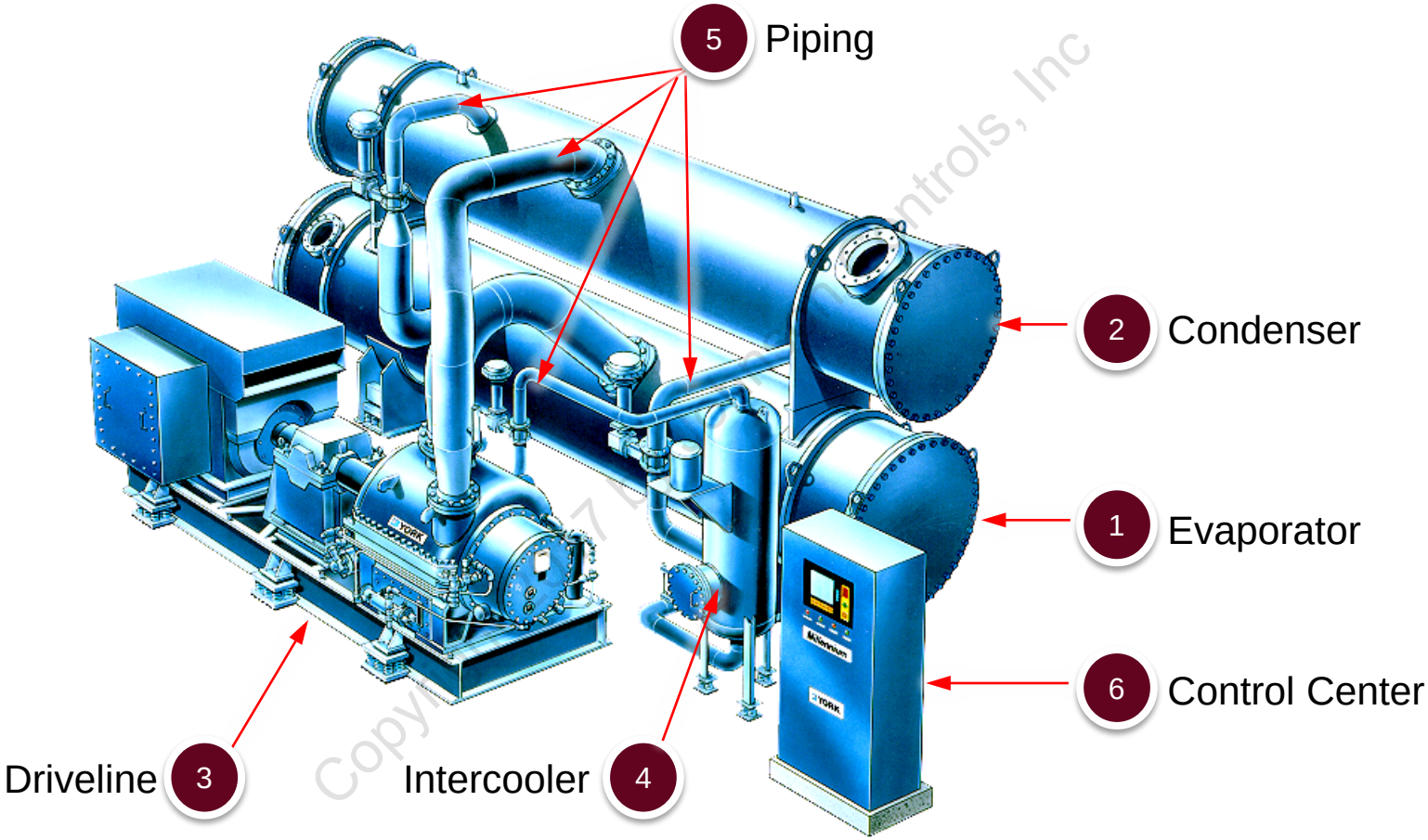

Installing the Intercooler—Guidelines

Intercooler



Intercooler Support

Copyright 2017 by Johnson Controls, Inc

- **Install the Intercooler between the drive base and heat exchangers** beyond the compressor end of the base
- **Provide temporary bracing** to prevent accidental tipping during the installation process

Installing the Intercooler

1. Mark the location.

- Mark the center of the intercooler on the floor in relation to the evaporator centerline

2. Provide the elevation.

- Place 1” (25 mm) steel blocks under the jacking screw locations

3. Place the component.

- Adjust the jacking screws to plumb the intercooler in both planes

4. Mount the spring isolators.

- If the unit is spring mounted



Copyright 2017 by Johnson Controls

Installing the Piping

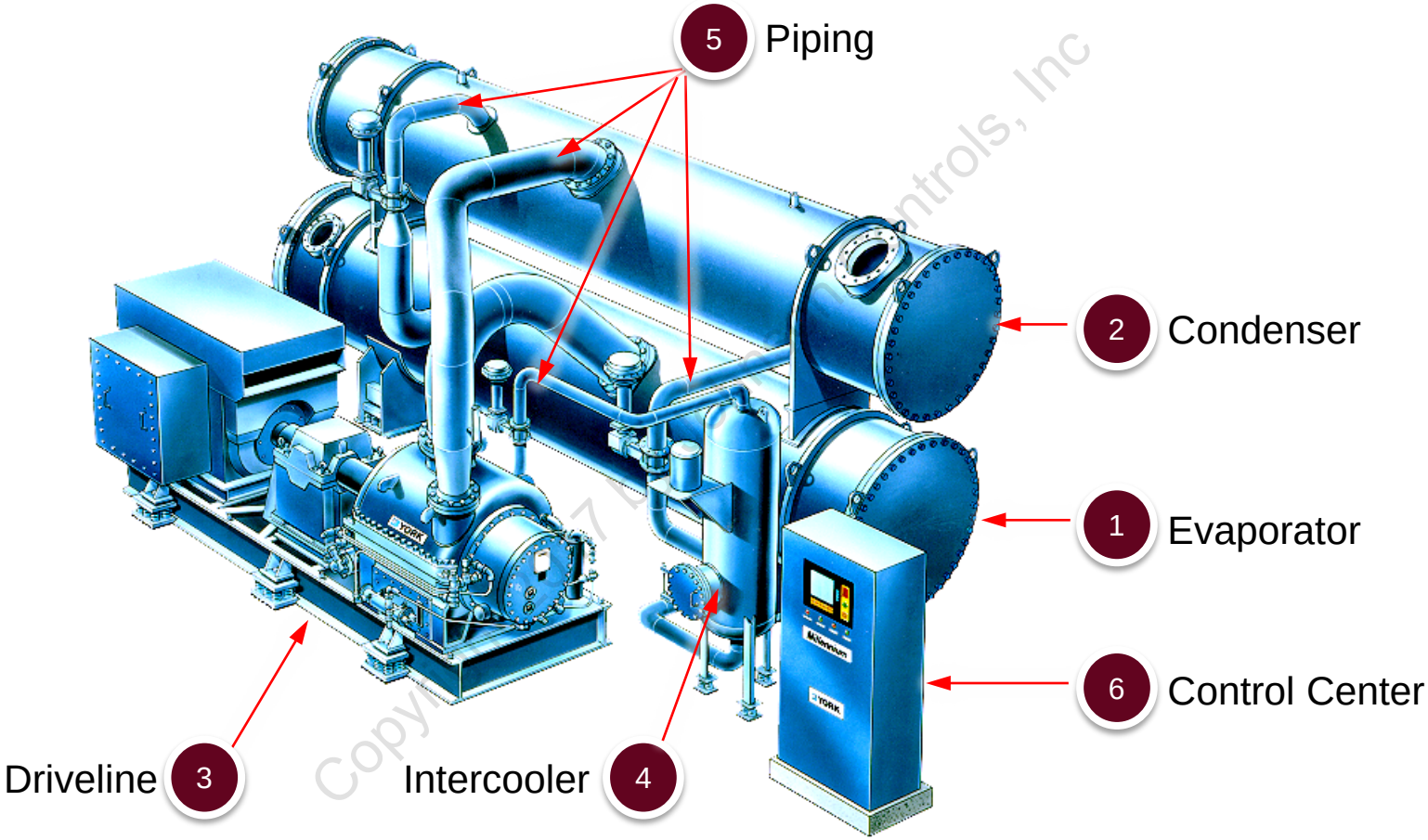

Installing the Piping (Cont'd.)

The piping installation procedure will depend on the type of piping received from the YORK® factory.



Non-fabricated piping

- Loose straight lengths of pipe
- Come with an internal and external coating
- All joints and welds to be done on site
- Major piping to be blast cleaned after welding

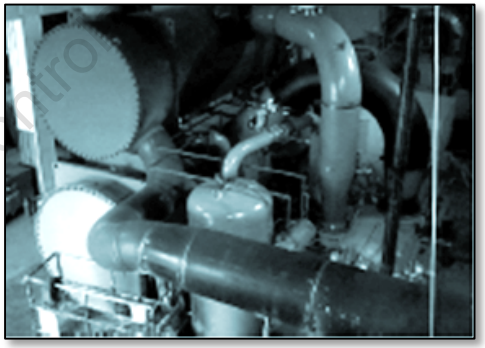

Partially pre-fabricated piping

- Pre-cut and welded to some fittings
- Anti-rust treatment done on some factory-provided sections
- Requires field fit-up and welding

Copyright 2017 by Johnson Controls, Inc.

Installing the Piping (Cont'd.)

The piping for the OM chiller can be categorized into three kinds:

All piping must be hung properly with no stress transmitted to the chiller.

- Refrigerant Piping
- Water Piping
- Ancillary Piping

Copyright 2017 by Johnson Controls, Inc

Installing the Piping (Cont'd.)

(077-32303-000)

Refrigerant Piping

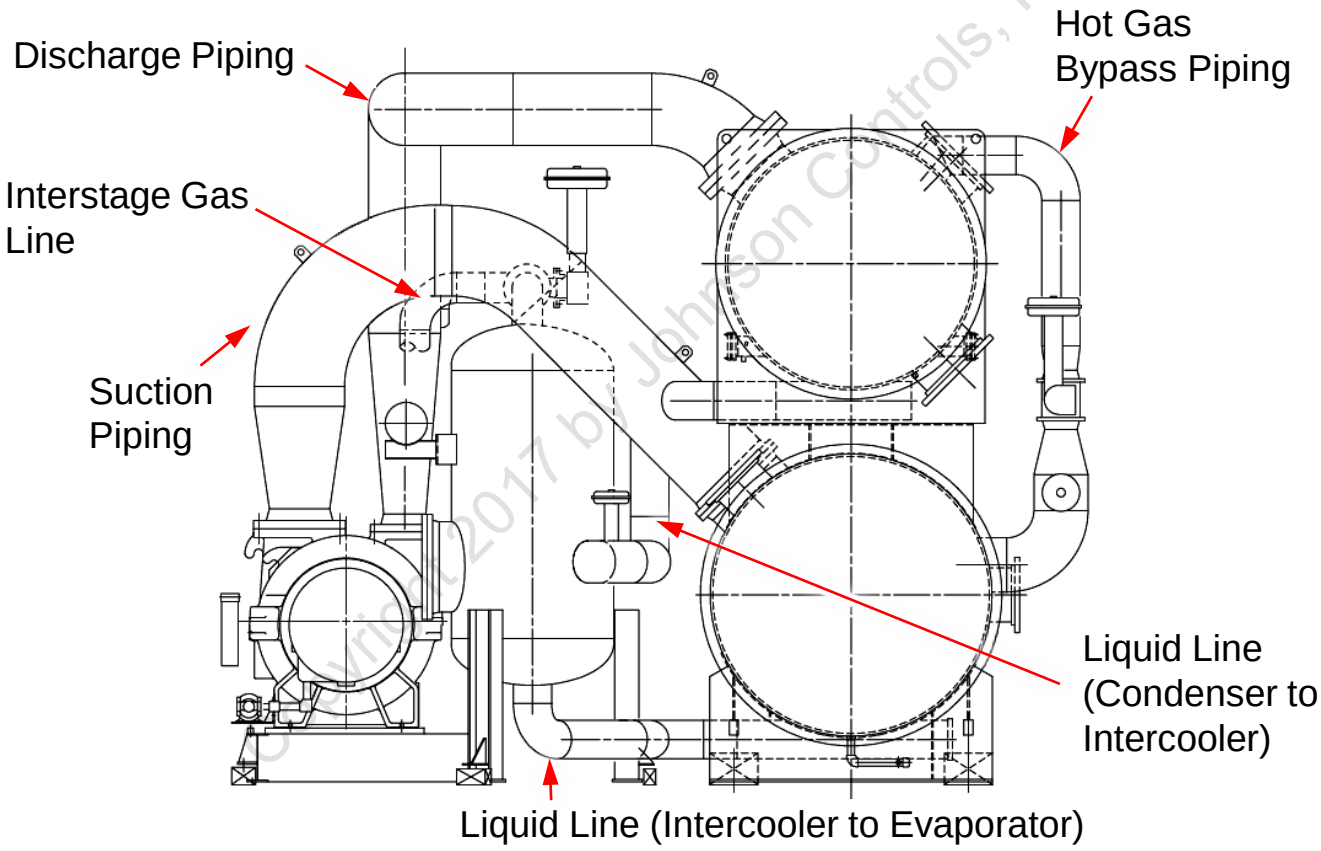

Copyright 2017 by Johnson Controls, Inc

Installing the Piping (Cont'd.)

(077-31585-000)

Water Piping

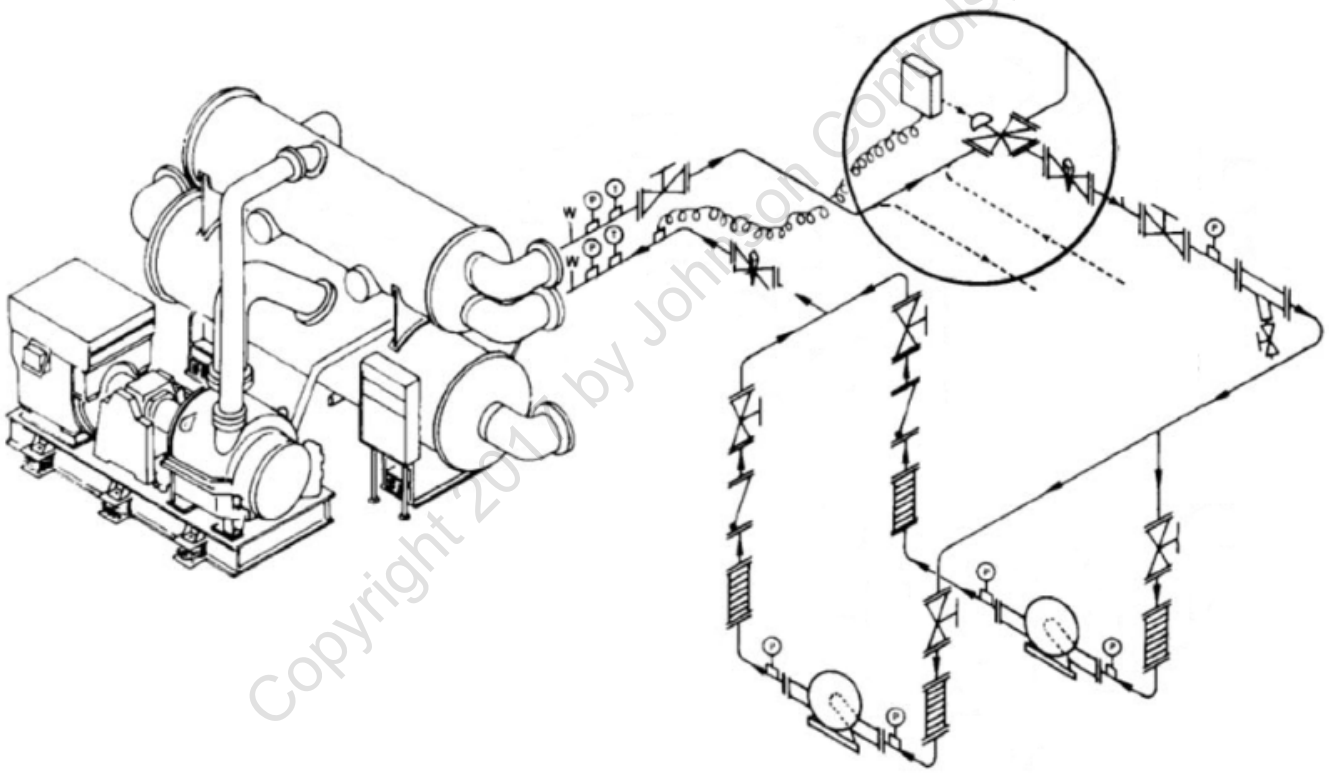

Copyright 2013 by Johnson Controls, Inc

Installing the Piping (Cont'd.)

(023-25214-002)

Ancillary Piping

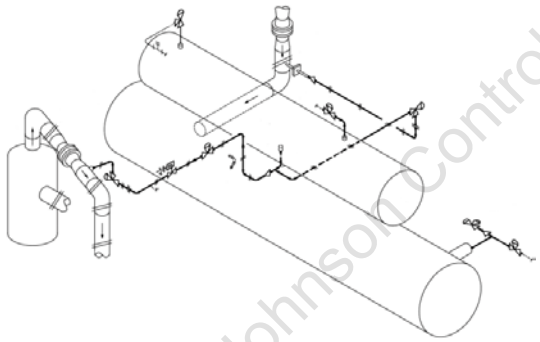

Liquid Injection Piping

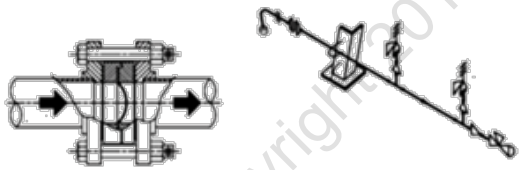

Relief Piping
(on top of the Condenser, Evaporator, and Intercooler)

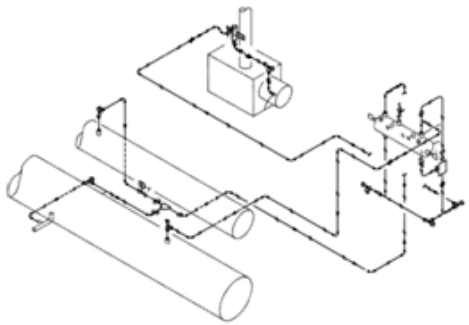

Oil Return System Piping

Copyright 2017 by Johnson Controls, Inc

Installing the Refrigerant Piping

(077-32303-000)

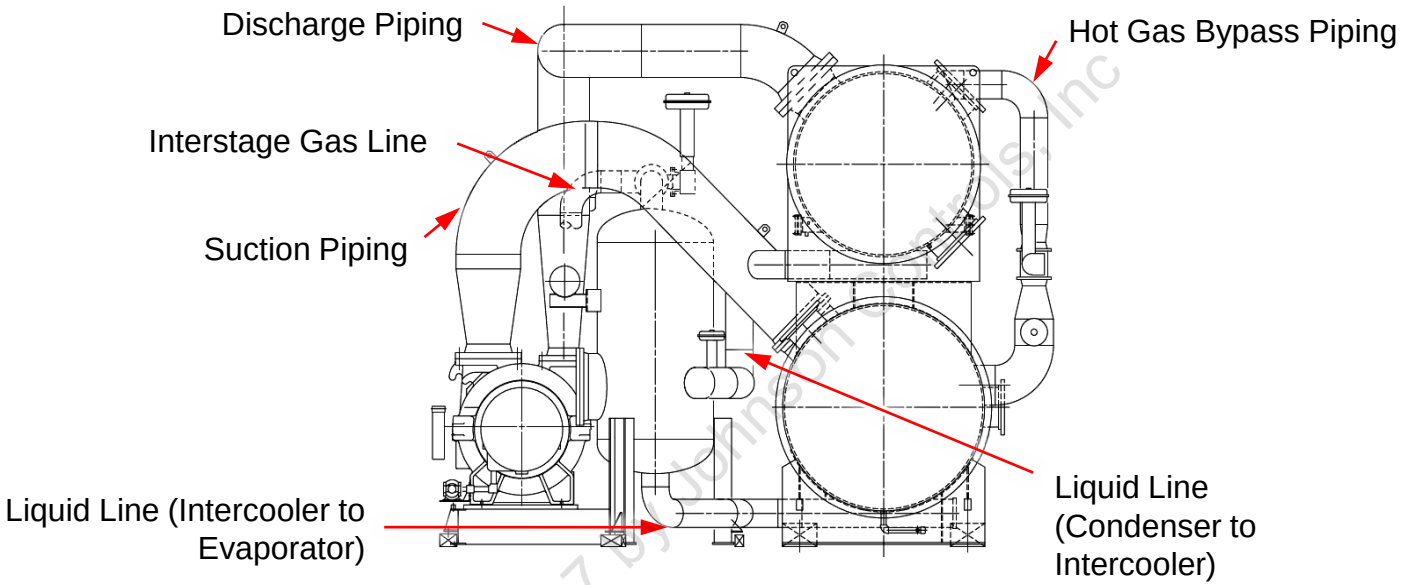

Copyright 2017 by Johnson Controls, Inc

Ensure that the refrigerant piping is assembled, welded, and tested on site according to the requirements of:

- The ASME code for pressure piping
- Refrigerant piping B31.5
- Customer-defined requirements

Refrigerant Piping



Copyright 2017 by Johnson Controls, Inc

Installing the Water Piping

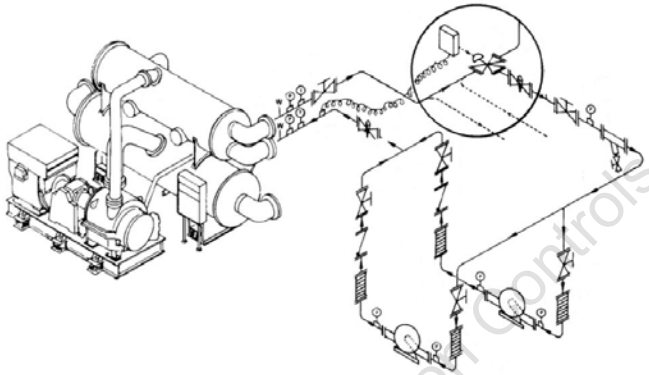

Copyright 2017 by Johnson Controls, Inc

- Connect after the equipment has been installed and leveled, and basic alignment has been obtained
- Support piping adequately
- Use flexible piping connectors
- Use construction drawings to check/verify the following:
  - Flange type or nozzle wall thickness
  - Pressure drop estimates and design temperatures
- Any deviation from construction prints must be authorized by YORK®

Water Piping

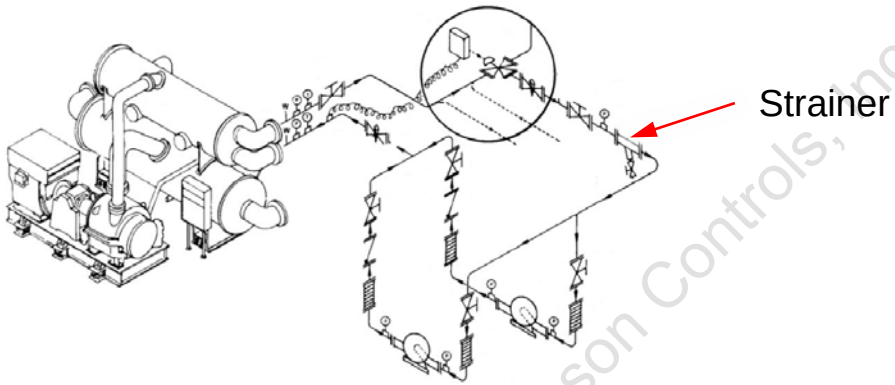

Copyright 2017 by Johnson Controls, Inc

Caution

Strainers should be used to protect the pump, thereby, protecting the evaporator and condenser from being blocked by foreign objects.

Caution

Prevent premature corrosion of the heat exchanger tubes by bypassing them from the equipment room piping loop.

Water Piping (Cont'd.)

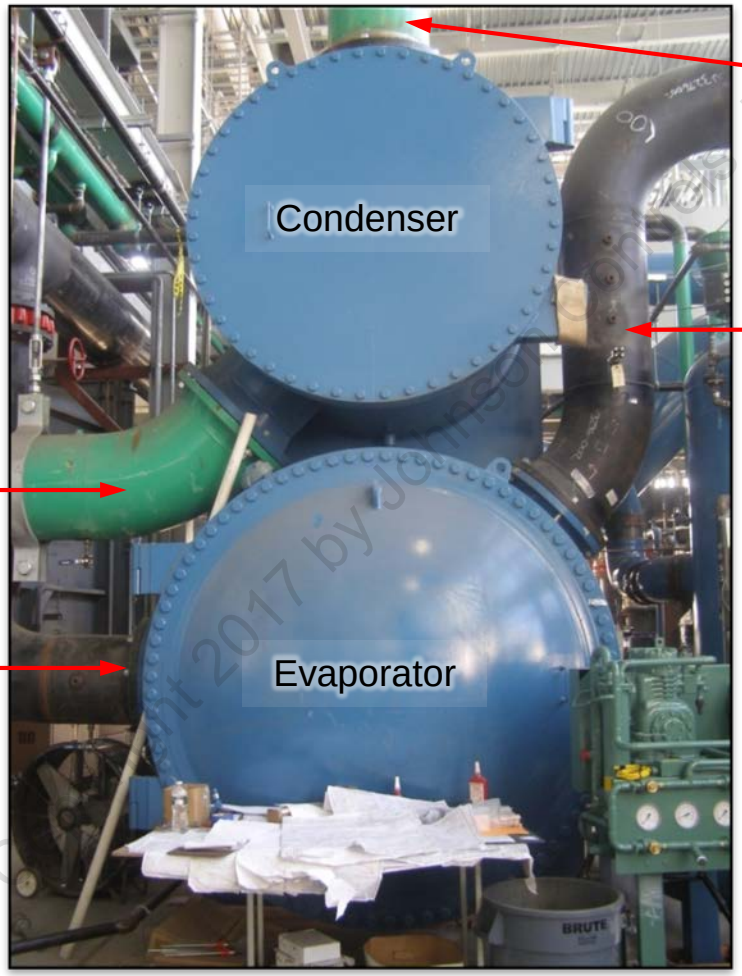

Copyright 2017 by Johnson Controls, Inc.

Installing the Ancillary Piping

Liquid Injection Piping

System Relief Piping

Oil Return System Piping

- Is installed after the refrigerant piping and main water piping is complete
- Typically measures 2” or smaller (inside diameter)
- Erecting Contractor responsible for pipe preparation
- Must follow ASME B31.5 requirements

Copyright 2017 by Johnson Controls, Inc.



This piping could be installed by a separate contractor.

Ancillary Piping

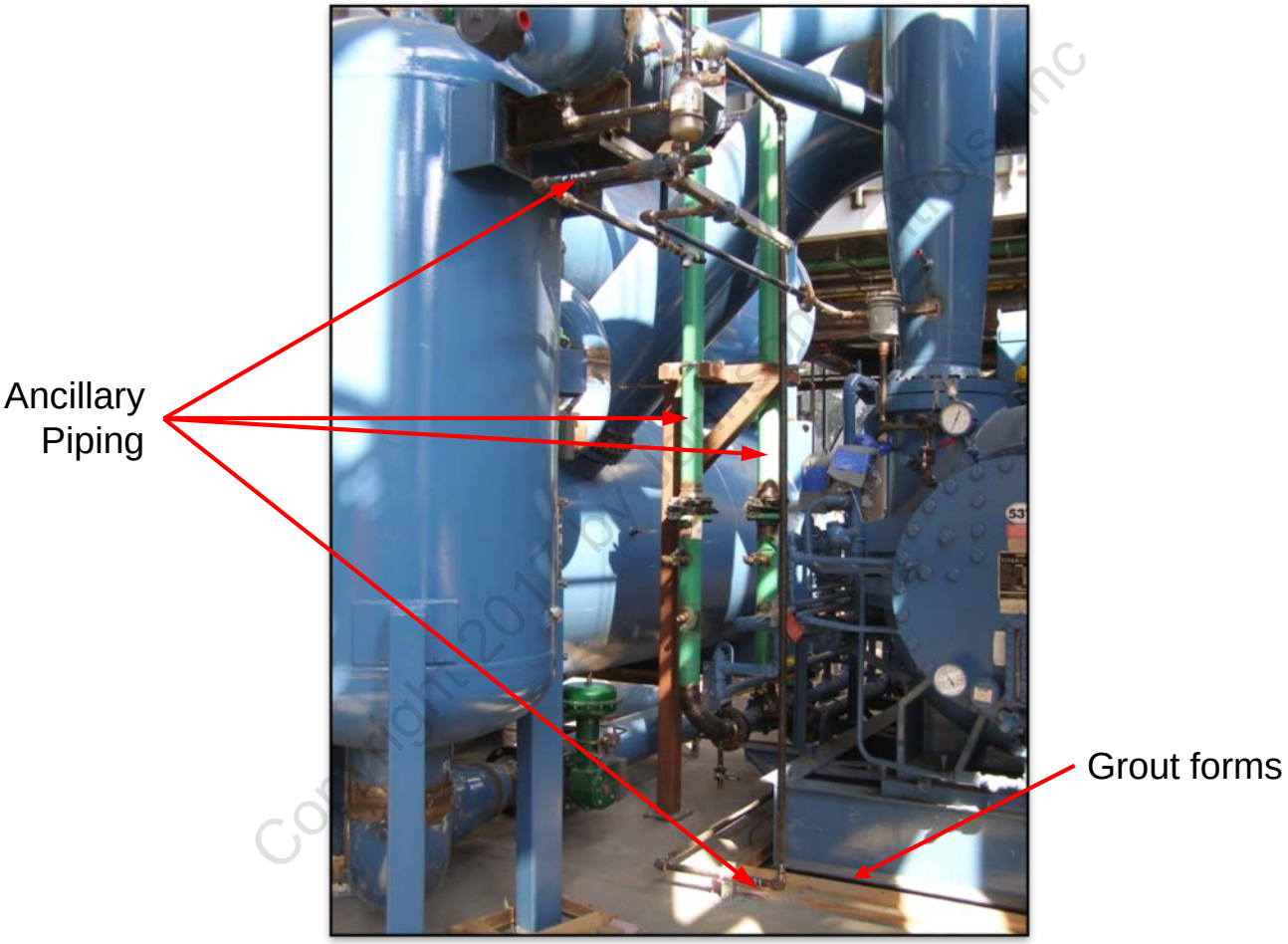

Copyright 2017 by Johnson Controls, Inc

Ancillary Piping—Liquid Injection

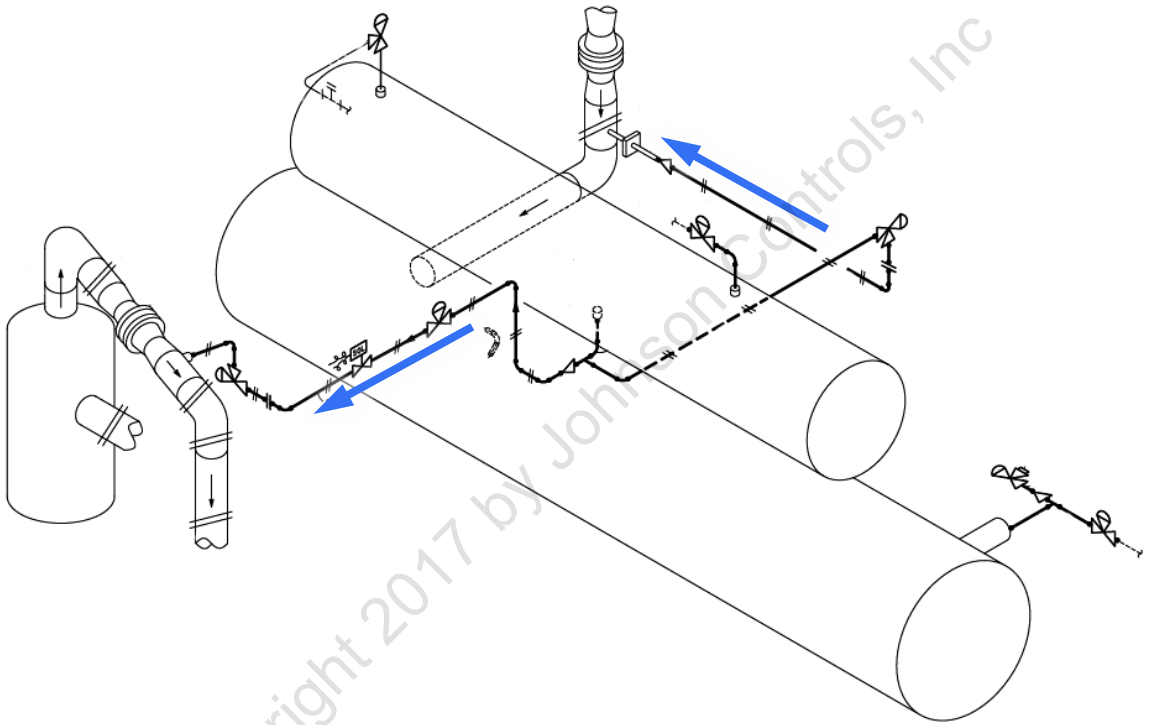

Copyright 2017 by Johnson Controls, Inc

- Installs to the hot gas line and interstage gas line
- Installation should follow construction drawings

Ancillary Piping—System Relief

- Installation should follow construction drawings
- Multiple valves may be required
- Isolated condenser or intercooler should be furnished with their own valves. (for instance when a discharge line check valve is furnished)

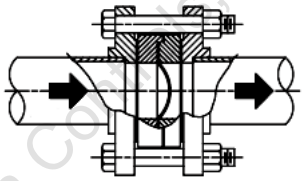

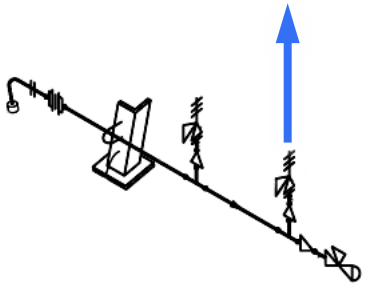

Copyright 2017 by Johnson Controls, Inc

Warning

Vent relief valves to a safe location. The relief valve vent line must meet the ASHRAE standard 15 guidelines. Support vent piping with flexible connection to eliminate piping load.

Warning

Prevent premature bursting by removing the rupture disk and relief valve before conducting the chiller strength test and leak test.

Ancillary Piping—Oil Return System

This pipe has a downward slope toward the compressor.

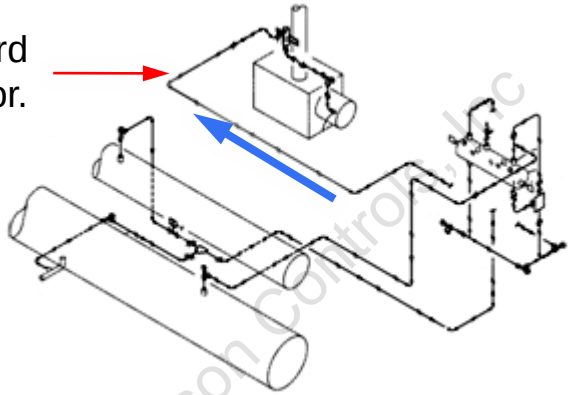

- Assemble the oil return unit in the same location as the vertical intercooler
- Ensure that the installation of heaters, controls, thermometer, and other accessories follows the drawings
- Ensure that lines to the eductor and solenoid are clean
- Weld the oil return filter to the drier bracket to the discharge pipe (See next slide)
- Install the filter drier body and pipe to the compressor and oil return unit
- Install the oil return float valve assembly

Copyright 2016 by Johnson Controls, Inc

Oil Return System Piping



Copyright © 2014 Johnson Controls

Oil Return System Piping (Cont'd.)

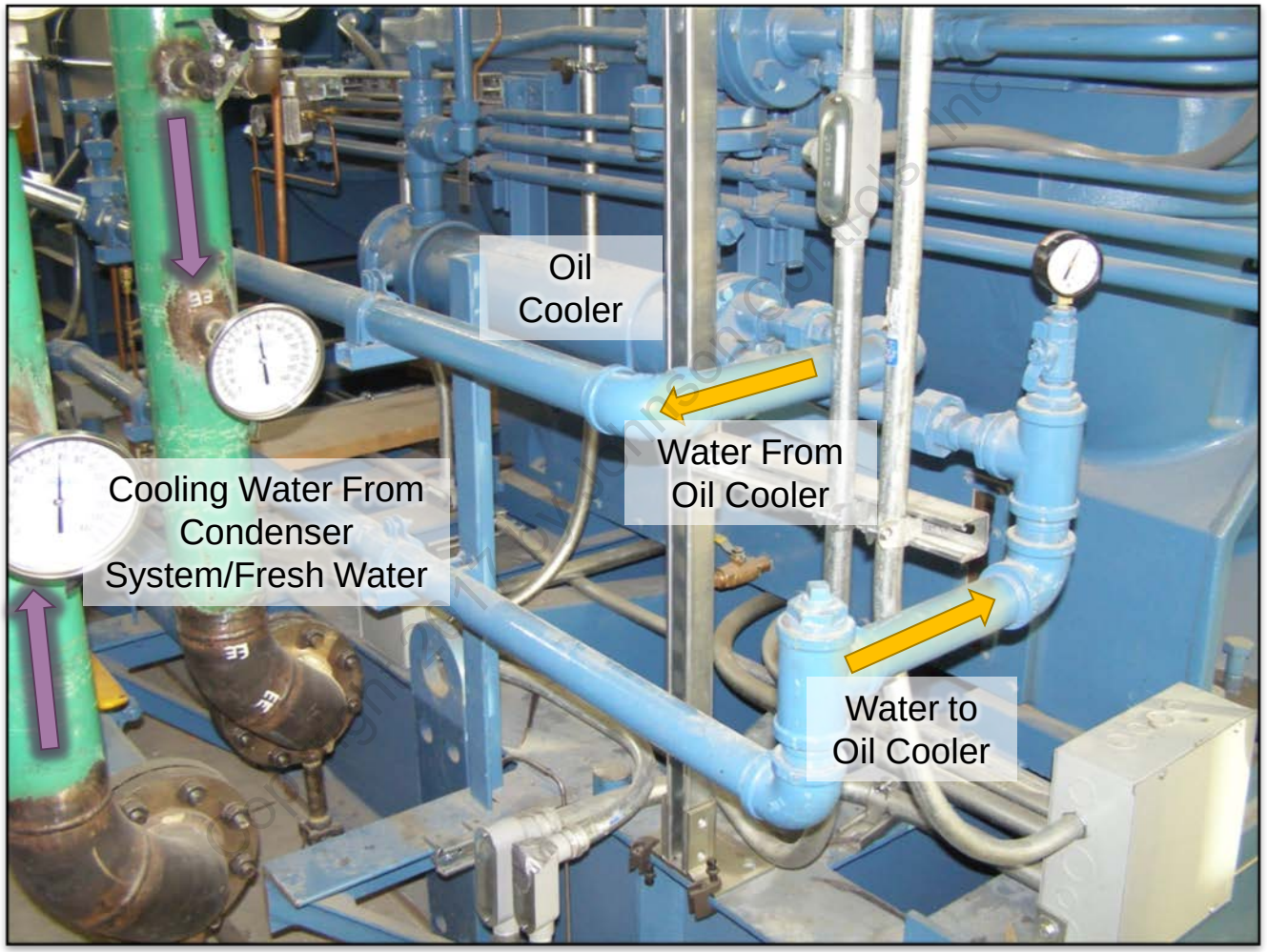

Copyright Johnson Controls Inc

Oil Return System Piping (Cont'd.)

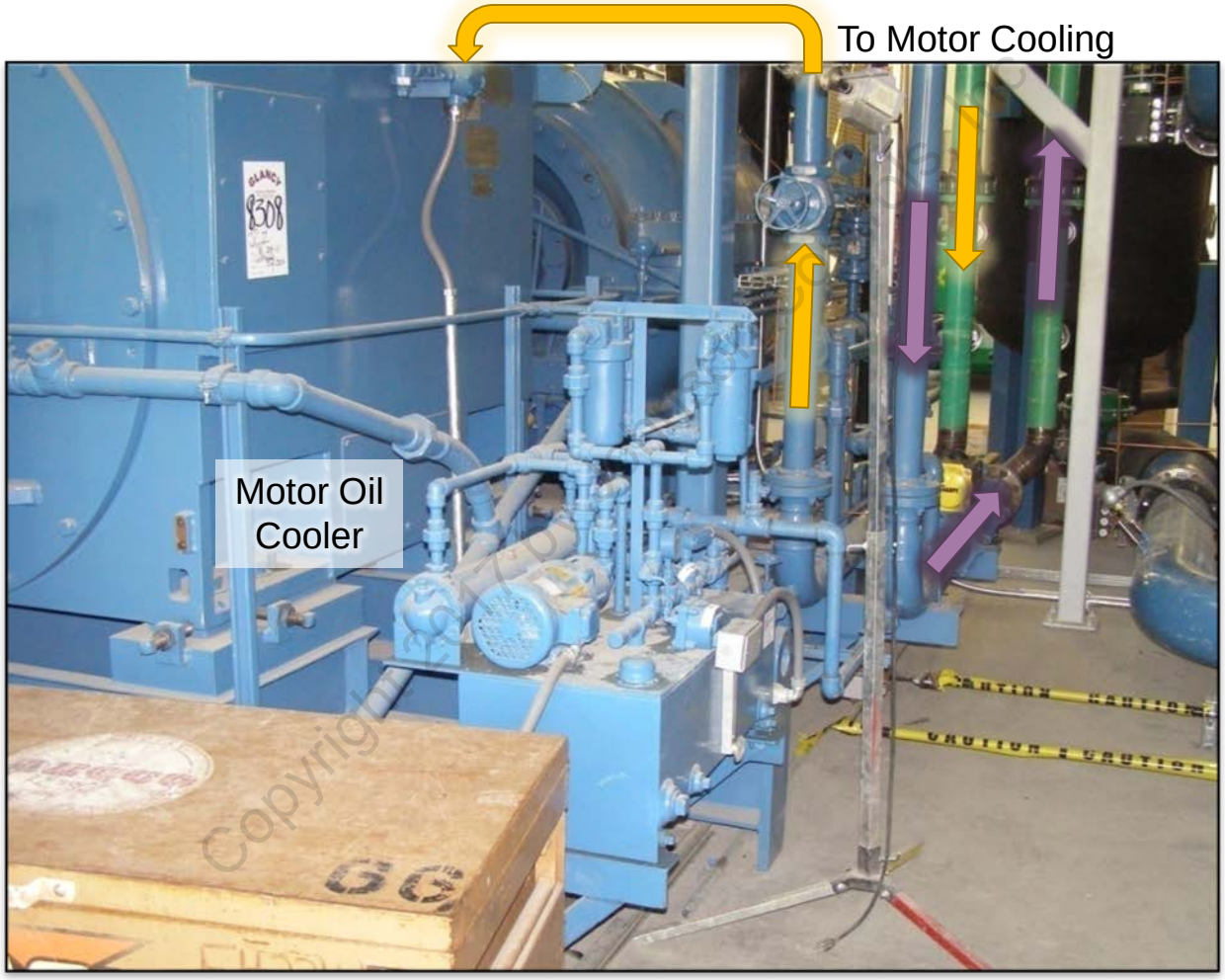

Copyright © 2017 Johnson Controls

Discussion: Piping

- What are some of the common problems faced while dealing with piping contractors?
- Which piping is usually prone to having installation issues?
  - Pipe stress at the Suction and Discharge flange connections at compressor

Copyright 2017 by Johnson Controls, Inc



Installing the Control Center

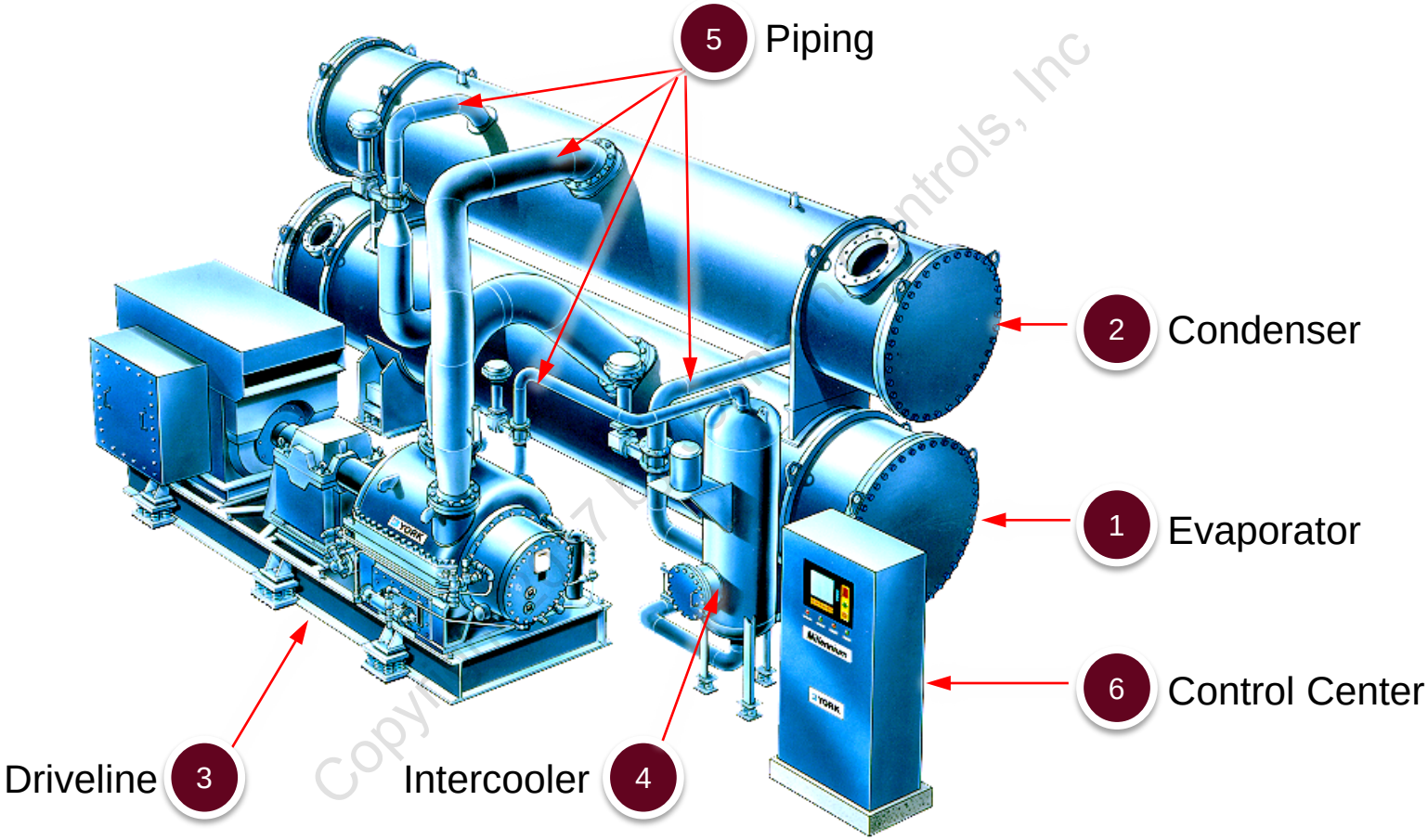

Installing the Control Center (Cont'd.)

- Mount the chiller control panel at an easily accessible location
- Provide space for door swing front and back (if needed) or access panel clearance
- Field wiring is required from the chiller-mounted devices to the control center
- Refer to construction drawings for control installation requirements
- All tubing and wiring must be adequately protected and supported



All electrical and refrigerant piping should be done through the side panels low down.



No drilling of the panel top.

Copyright 2017 by Johnson Controls, Inc

Installing Components on the Driveline

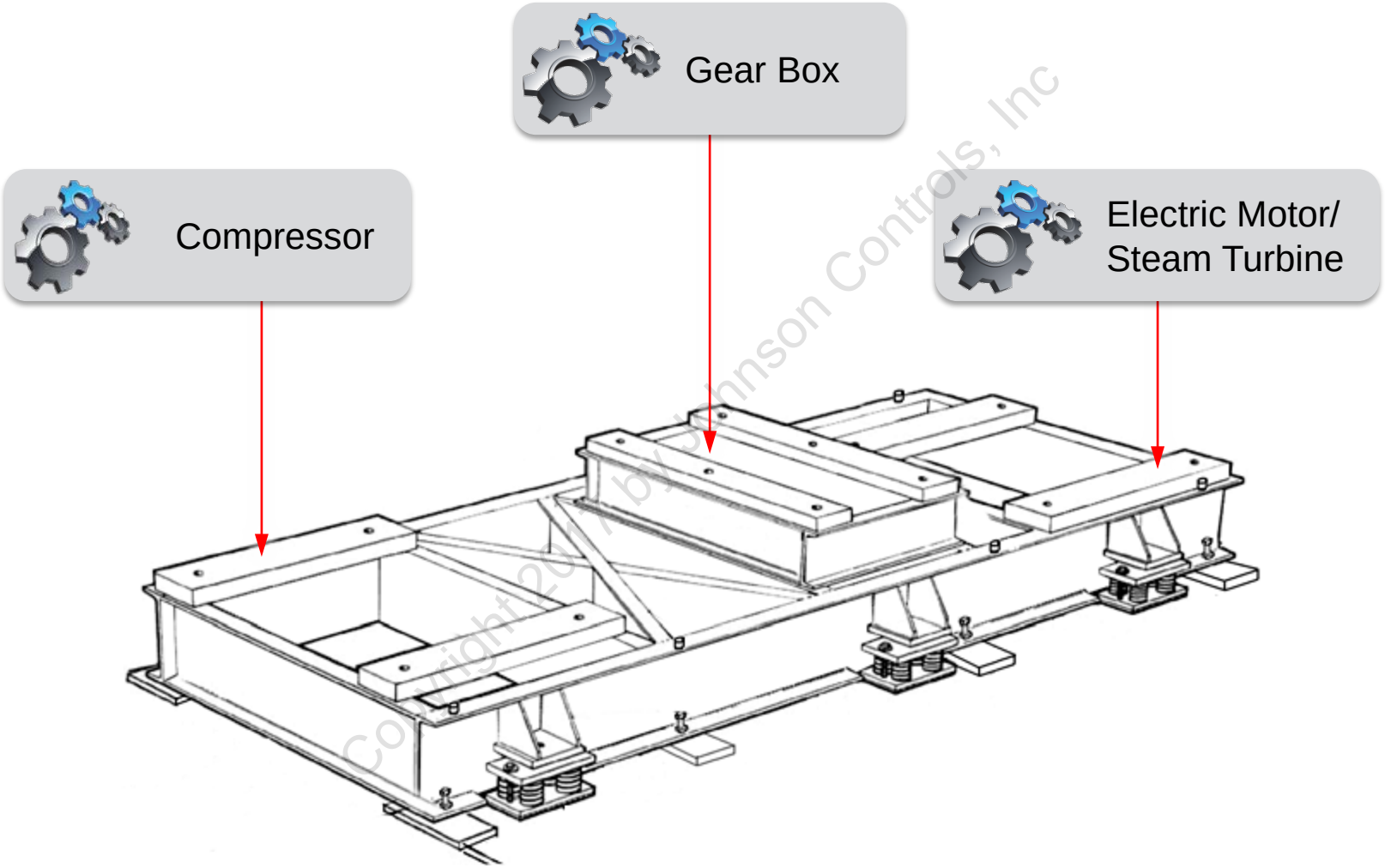

Copyright 2017 by Johnson Controls, Inc

Installing the Compressor

(077-32079-000)

1. Mark the location.

- Mark the high speed shaft center on the base using half the distance between pre-drilled mounting holes

2. Place the component.

- Place the base in position on shims
- Place the compressor on to the machined mounting pads on the base

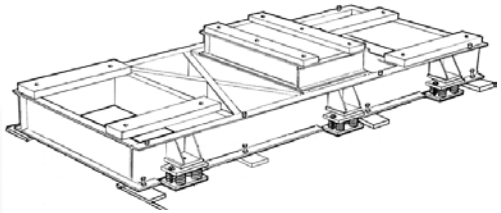

3. Verify the installation.

- Install the compressor foot bolts.
- Tighten the horizontal jack screws and locking nuts
- Check that the compressor suction connection is axially aligned with the evaporator connection

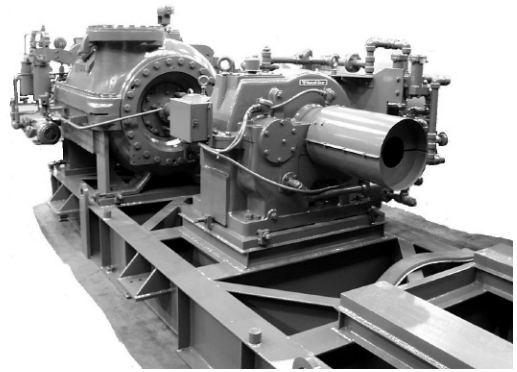

Copyright 2017 by Johnson Controls, Inc

Installing the Gear Box

1. Provide the elevation.
   - Set the gear box on its machined supports
2. Install the component.
   - Install the high-speed coupling hubs to get it roughly in place
3. Mark the location.
   - Mark the center points of the gear bolt holes on the base
4. Set the components.
   - Remove the gear box from the base
   - Drill and tap holes in the base, if not already done at the factory
   - Reset the gear box on to the base
   - Lock the jacking screws in position

Copyright 2017 by Johnson Controls, Inc

Installing the Electric Motor

1. Provide the elevation.

- Locate the motor on its mounting supports using shims to get it roughly aligned

2. Obtain clearance.

- Obtain the proper axial clearance between the motor shaft and the gear input shaft

3. Reset motor.

- Perform a rough alignment of the motor relative to the gear position
- Mark the center points of the motor bolt holes on the base
- Remove the motor from the base
- Drill and tap mounting holes in the base, if not already done
- Reset the motor on to the base and adjust the jacking screws in position

Copyright 2017 by Johnson Controls, Inc

Post-installation

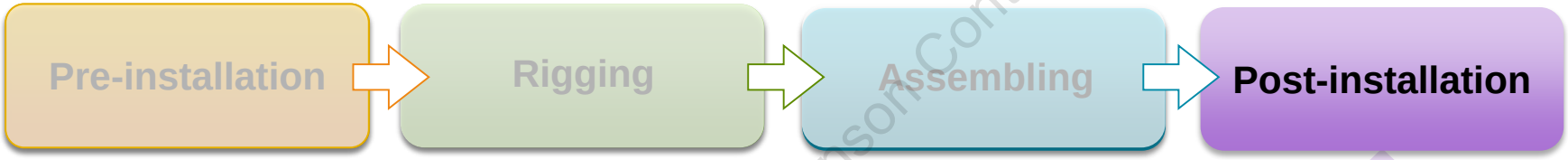

After the unit has been assembled, the following might be required:

- Installation of the pump-out unit
- Insulation of the unit

Copyright 2017 by Johnson Controls, Inc

Installing the Pump-out/Recovery Unit

- Holds the refrigerant charge when the OM chiller is serviced
- Size of the unit should be 120% of the largest charge amount
- To allow faster transfer of the refrigerant from the chiller, install the recovery unit at a level lower than that of the chiller
- Installation should follow YORK® construction drawings

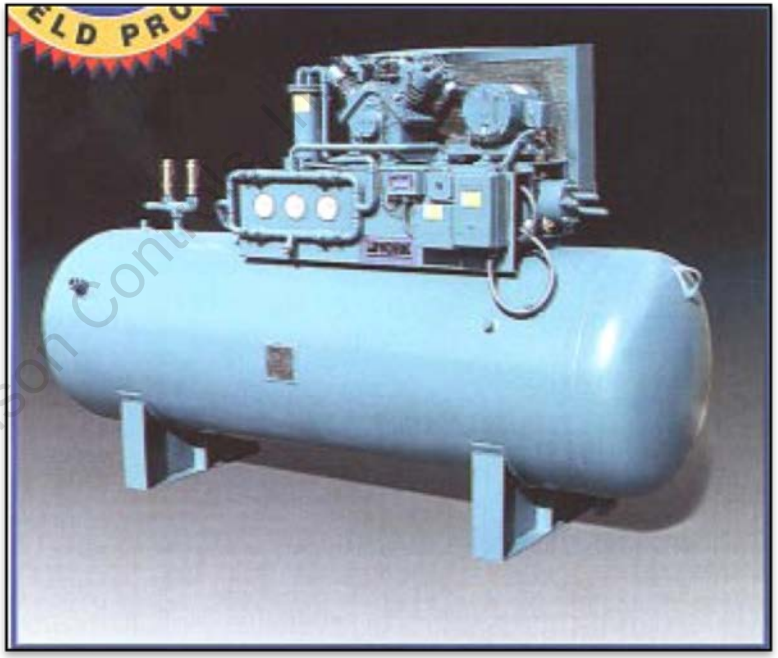

Copyright 2017 by Johnson Controls

Caution

Improper usage of the pump-out unit can result in freezing of water in the tubes, thereby, causing serious damage.

Discussion: Insulation

An OM chiller was installed without applying proper insulation.

- How will this impact the functioning of the chiller?
  - The OM chiller will lose capacity and efficiency
- List the consequences of not applying proper insulation
  - Evaporator will sweat and rust

Copyright 2017 by Johnson Controls, Inc



Types of Insulation

Thermal Insulation

- Provided on cold operating surfaces
- Prevents moisture formation
- Aluminum jacketing recommended for some types of insulation materials
- Thickness may be customer/engineer specified

Acoustic Insulation

- Absorbs excessive noise
- Can be applied to the compressor, condenser, and discharge pipe
- A multi-layer material with an inner foam layer recommended
- Fiberglass may be used for outdoor applications or high temperatures



Insulate hot surfaces operating over 120°F (50°C) associated with steam piping.



Burn hazard

Copyright 2017 by Johnson Controls, Inc.

Insulation



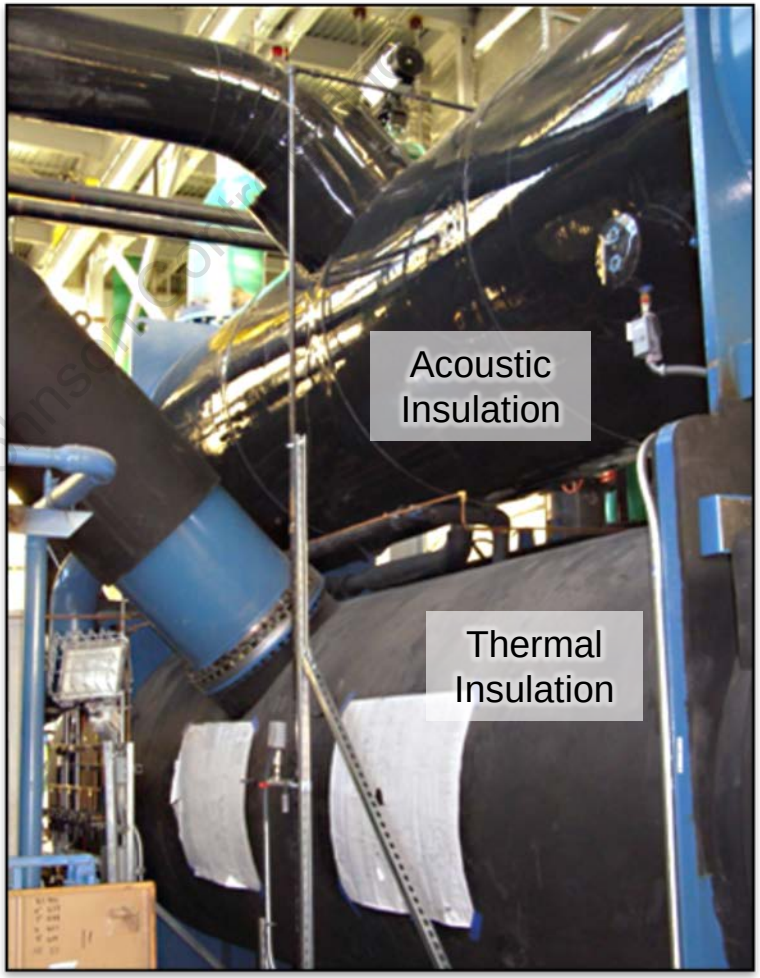

Copyright 2017 Johnson Controls

Any Questions?



Copyright 2017 by Johnson Controls, Inc

Key Takeaways

In this topic, you learned that:

- Your role in M Compressor installation is to observe the contractor work, ensure adherence to standards, report discrepancies, and safeguard Johnson Controls' interests
- Have all relevant drawings and manuals available to verify installation procedures
- Ensure that the Rigging Contractor follows instructions listed on the equipment
- Appropriate steps should be taken at all times during the installation process to protect the equipment and ensure personnel safety and customer satisfaction with the end product



Copyright 2017 Johnson Controls, Inc

M Compressor_Alignment

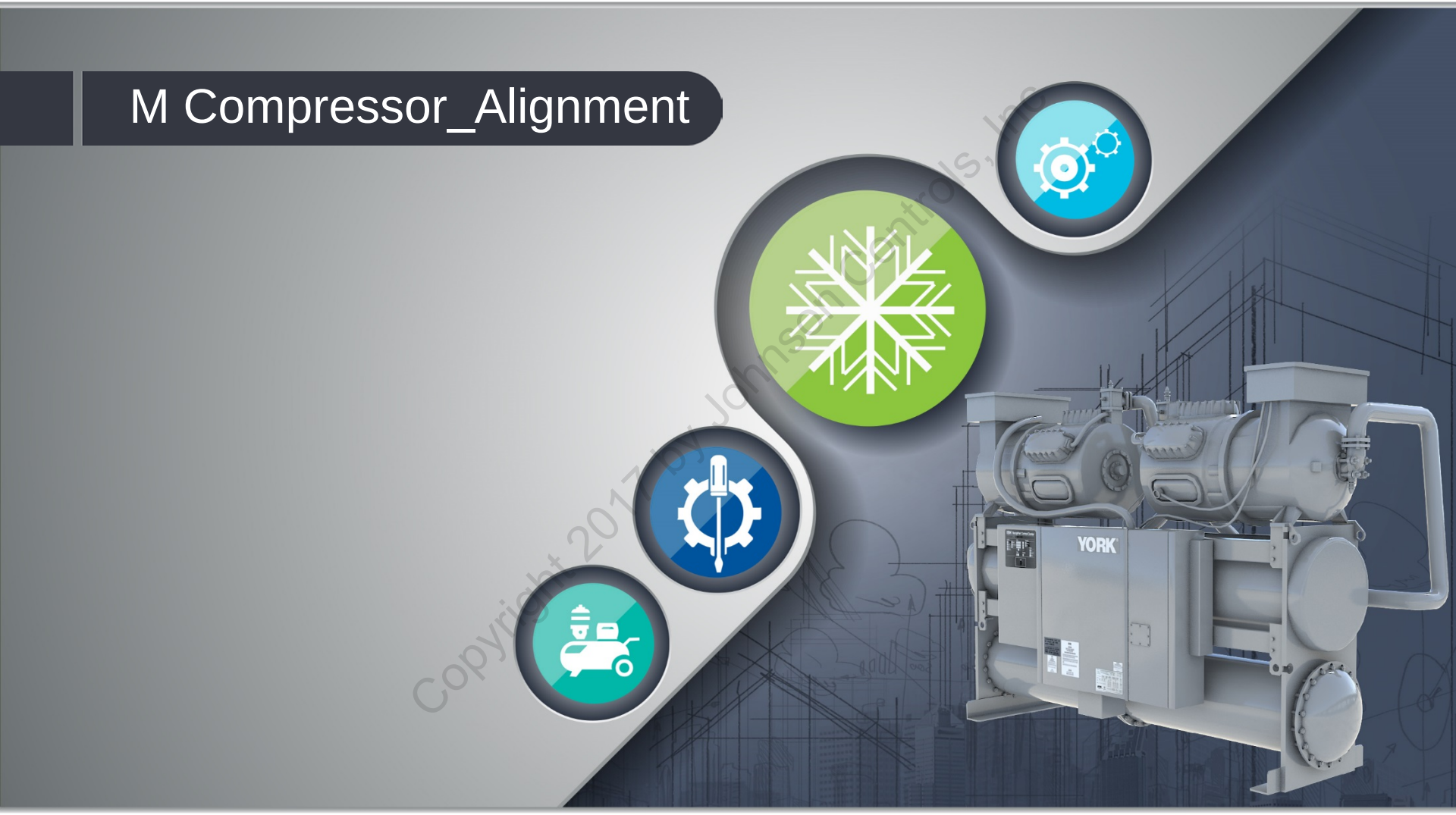

Copyright 2017 by Johnson Controls, Inc.

Topic Objectives

M Compressor Installation

1. Site Preparation
2. Assembly
3. Alignment
4. Commissioning

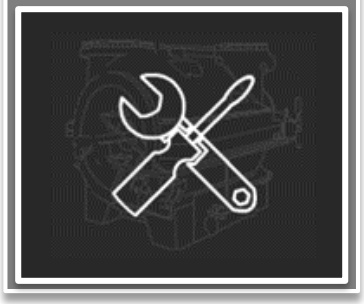

At the end of this topic, you will learn about:

- Fundamentals of alignment
- Pre-alignment tasks
- Steps in alignment
- Post-alignment tasks

Copyright 2017 by Johnson Controls, Inc

Topic Objectives (Cont'd.)

M Compressor Installation

1. Site Preparation
2. Assembly
3. Alignment
   - Fundamentals of alignment
   - Pre-alignment tasks
   - Steps in alignment
   - Post-alignment tasks
4. Commissioning

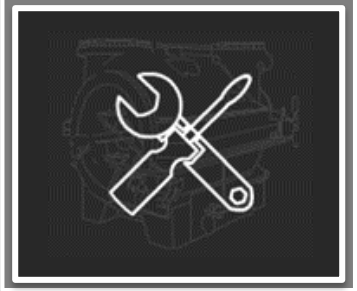

Fundamentals of alignment.

At the end of this segment, you will be able to:

- Define alignment and offset
- Describe the types of offset

Copyright 2017 by Johnson Controls, Inc.

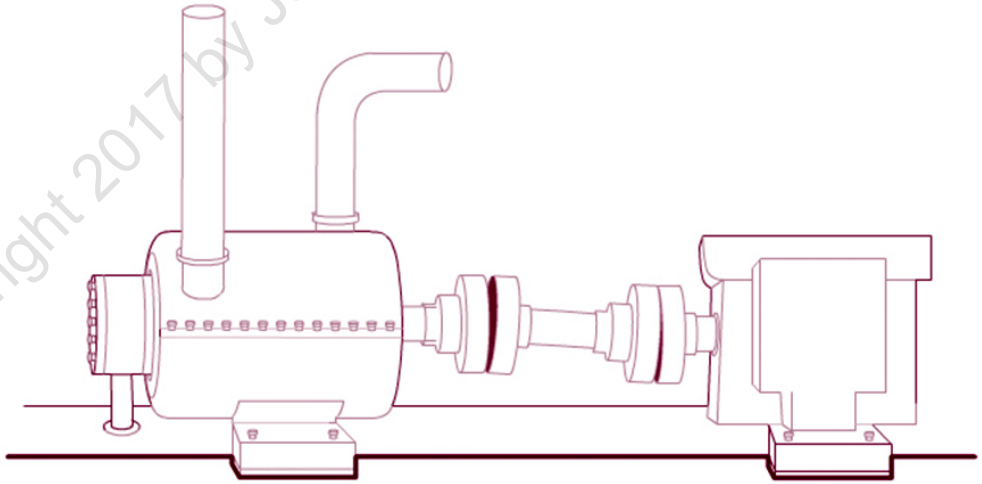

What is Offset?

Offset occurs when shafts are not properly aligned along their centerlines during machine operation.

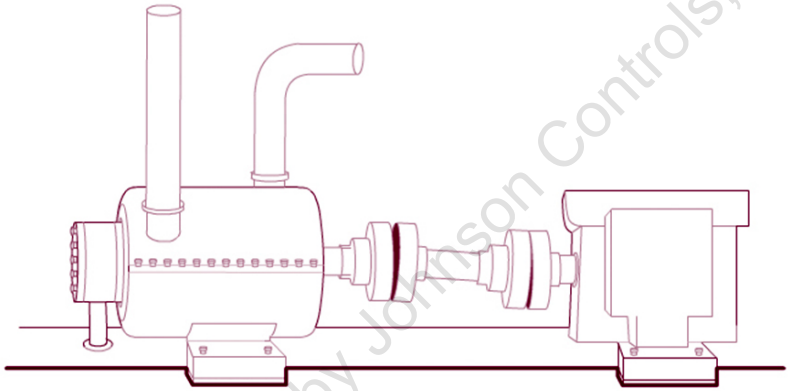

Copyright 2017 by Johnson Controls, Inc

Typical causes of offset include:

- Thermal expansion 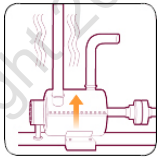
- Pipe strain or frame distortion 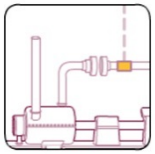
- Improper installation 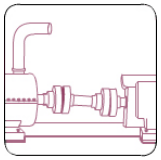
- An uneven, shifting, or settling foundation 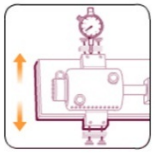

Consequences of Offset

Premature motor bearing failure

Normal

A normal bearing wear track runs down the center of the raceway.

Misaligned

Misalignment causes the following:

- Vibration issues
- Over heating of motor bearings
- Thrust problems

Copyright 2017 by Johnson Controls, Inc

Sources of Offset

Shaft Misalignment

Shaft Misalignment exists when the relative position of the two coupled machines' shaft centerlines DO NOT form a straight line when the machines are working at normal operating temperatures.

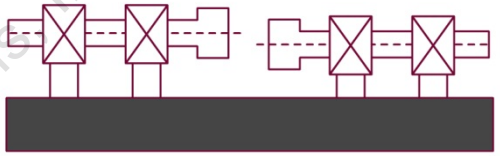

Bearing Face Misalignment

Bearing Face Misalignment exists when the faces of the machines' bearings are not parallel to one another when the machines are working at normal operating temperatures.

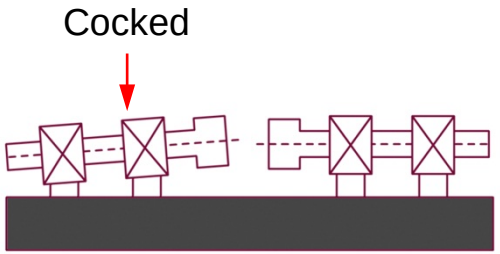

Copyright 2017 by Johnson Controls, Inc

Types of Shaft Offset

Offset Misalignment

Coupled shafts are parallel, but not on the same axis.

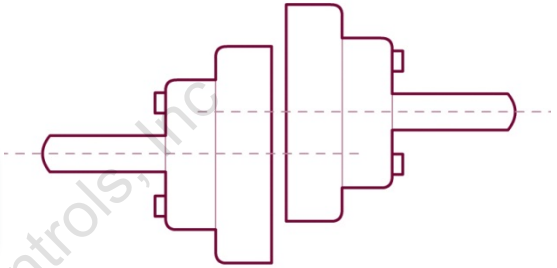

Angular Misalignment

Coupled shafts are not parallel, but at an angle to each other.

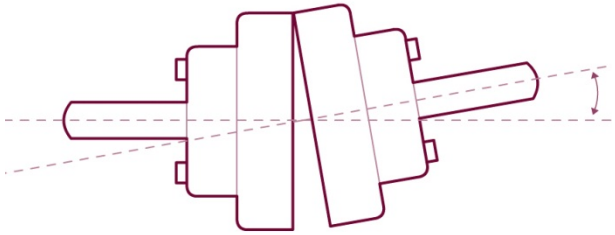

Offset and Angular Misalignment

Coupled shafts are on different axes and at different angles.

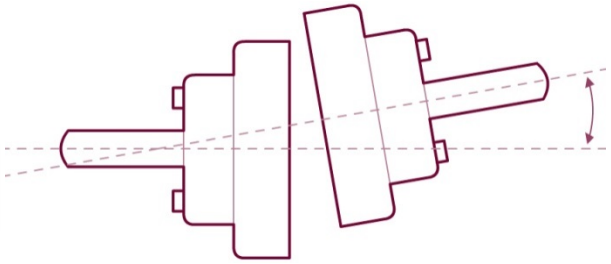

Copyright 2017 by Johnson Controls, Inc.

Offset Misalignment

Due to shaft angularity, offset misalignment depends on where the measurement plane (2) is located.

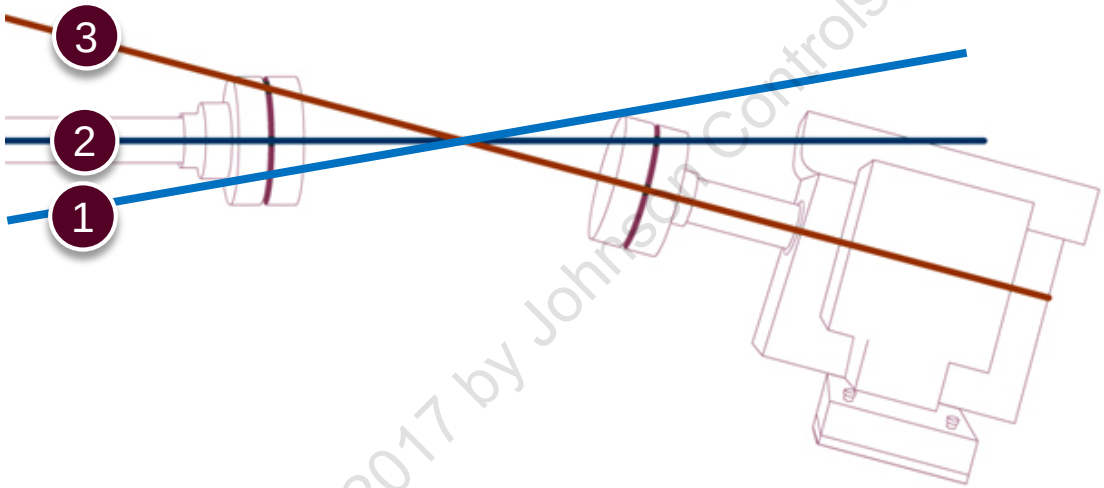

Copyright 2017 by Johnson Controls, Inc

At point 1, the movable shaft is HIGH.

At point 2, the movable shaft is ALIGNED.

At point 3, the movable shaft is LOW.

Angular Misalignment

Angular misalignment is determined by calculating the slope (rise over run) between the two shaft centerlines. As the run increases, so does the rise (offset).

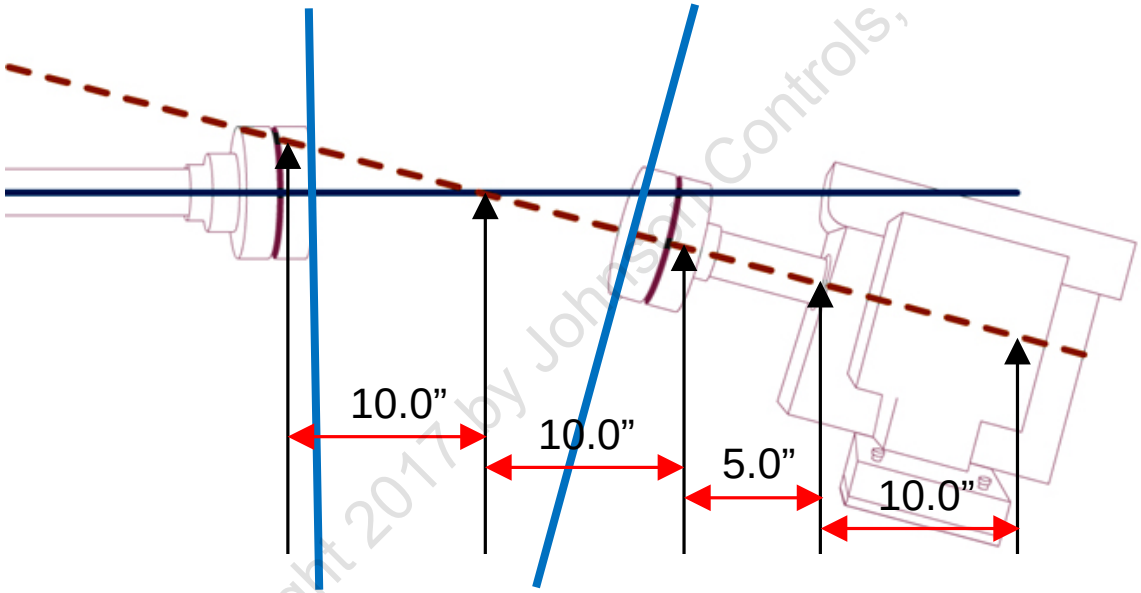

Copyright 2017 by Johnson Controls, Inc.

Point	1	2	3	4	5
Position	High	Even	Low	Low	Low
Amount	0.050”	0.000”	0.050”	0.075”	0.125”

What is Alignment?

Alignment is the positioning of the axis of a coupled machine shaft with that of another, within acceptable limits of tolerance.

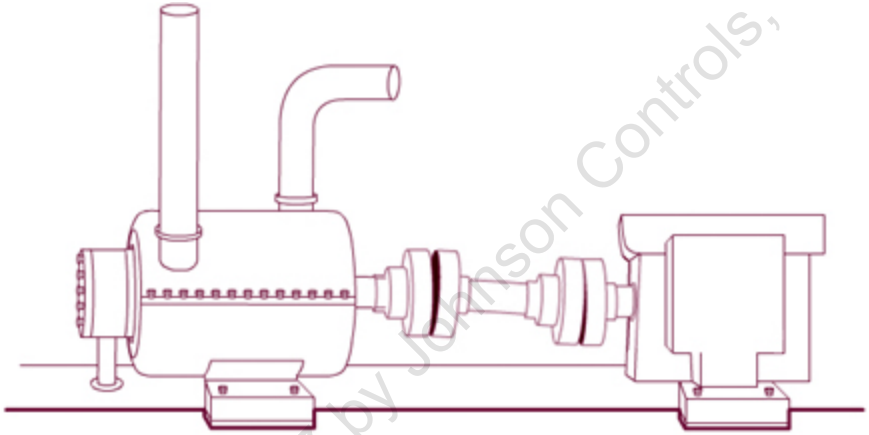

Copyright 2017 by Johnson Controls, Inc

A properly aligned machine has several important benefits:

- Reduced vibration ↓
- Less energy consumption ↓
- Increased bearing life ↑

Types of Misalignment

- Alignment



- Offset misalignment



- Angular misalignment



- Offset and Angular misalignment



Copyright 2017 by Johnson Controls, Inc

Check Your Understanding—1

The most typical results of misalignment are:

- ☐ Vibration
- ☐ Premature bearing failure
- ☐ Bent shafts
- ☐ Any other conditions the students may have encountered?

Copyright 2017 by Johnson Controls, Inc



Topic Objectives

M Compressor Installation

1. Site Preparation
2. Assembly
3. Alignment
   - Fundamentals of alignment
   - Pre-alignment tasks
   - Steps in alignment
   - Post-alignment tasks
4. Commissioning

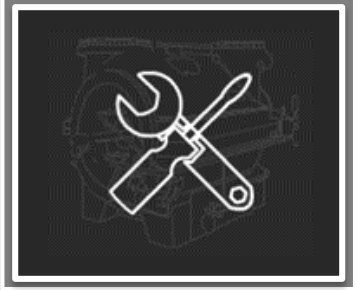

Pre-alignment Checks

At the end of this segment, you will be able to:

- Identify the tasks involved in preparing a machine for alignment
- Describe the machine conditions that need to be checked before you begin alignment
- Explain the various ways of correcting soft foot

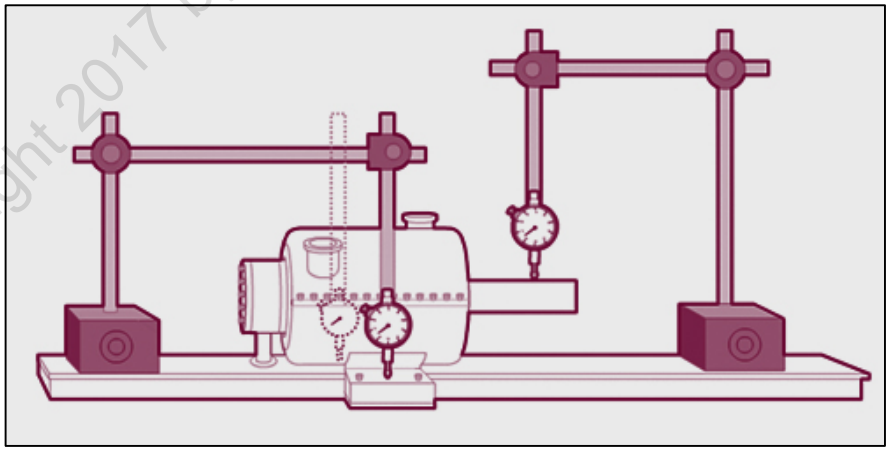

Copyright 2017 by Johnson Controls, Inc.

Pre-alignment Checks

A complete alignment task involves two phases:

- Pre-alignment
- Precision alignment

To prepare a machine for precision alignment, you need to complete all pre-alignment tasks. These can be divided into:

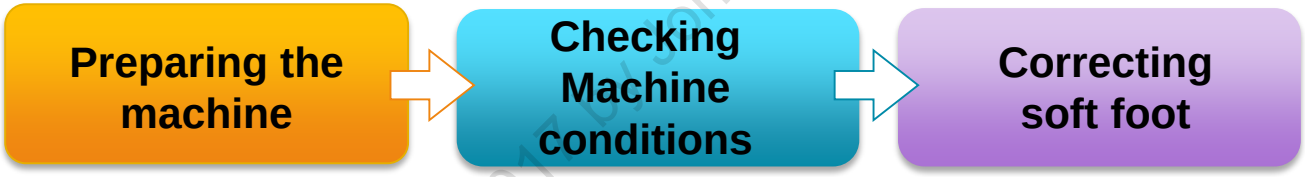

Copyright 2017 by Johnson Controls, Inc

Safety Precautions

Take the following “Lock Out—Tag Out” safety precautions before you begin the pre-alignment checks.

Disconnect all electrical connections to prevent accidental start of machine.



Block out all pumps to prevent any flow in the piping.



2
4
Safety

Copyright 2017 by Johnson Controls, Inc



You need two layers of protection – the panel off switch/fuse and the power box, which supplies the power.
If you are working on a steam turbine, you need two shut-off valves between you and the boiler.

Preparing the Machine

Preparing the machine → Checking Machine conditions → Correcting soft foot

To prepare a machine for alignment, the following items need to be checked:

- Foundation and Base Plates



- Machine Anchoring



- Piping Strain

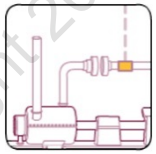

If any of the above is not checked thoroughly, it can create enough vibration to render the alignment useless.

Copyright 2017 by Johnson Controls, Inc.

Foundation and Base Plates

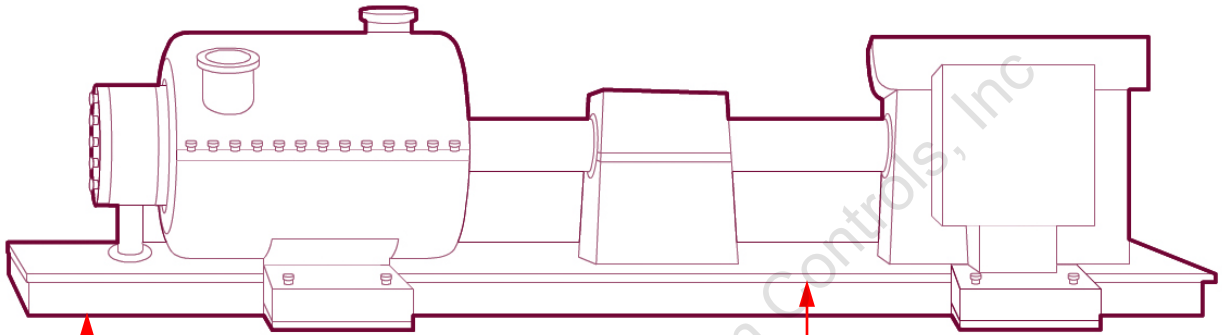

Foundation

Must be:

- Level
- Firm enough to provide support without movement

Base Plate

Must be:

- Rigid enough to firmly support the equipment without stress
- Securely anchored to the foundation

A clean, firm, and level base plate and foundation is required for proper alignment to ensure minimal flexing between the machine's components.

Copyright 2017 by Johnson Controls, Inc

Foundation and Base Plates (Cont'd.)

The feet of the motor, gearbox, and compressor must be free of:

- Cracks
- Breaks
- Rust
- Corrosion
- Paint

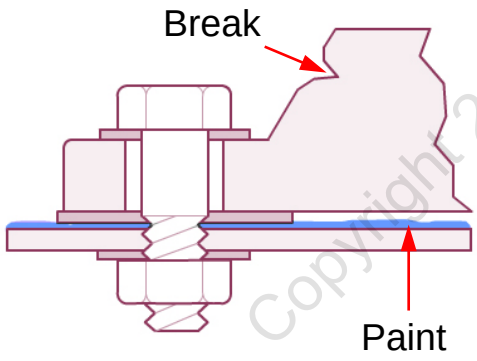

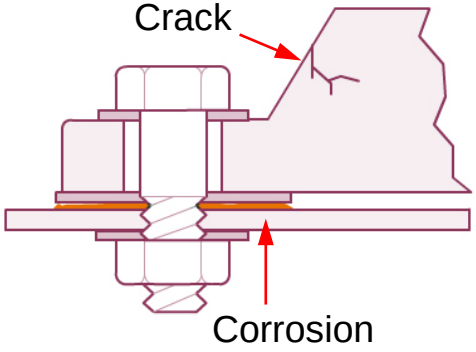

Copyright 2017 by Johnson Controls, Inc.

Foundation and Base Plates (Cont'd.)

- The equipment must be bolted to the base plate and not anchored to concrete
- The contacting surface should be smooth and clean

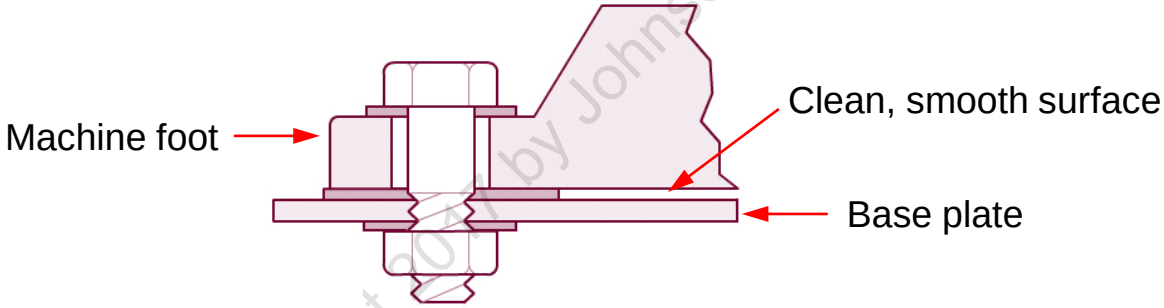

Copyright 2017 by Johnson Controls, Inc

Anchoring

- Anchoring should be firm but adjustable to allow for machine movement
- Proper fasteners (bolts, washers, nuts, shims) should have been used
- Anchor bolts should be of correct size, grade, and length of the unthreaded portion
- Base plates should be of correct thickness and should be anchored using a lock washer, washer, and nut

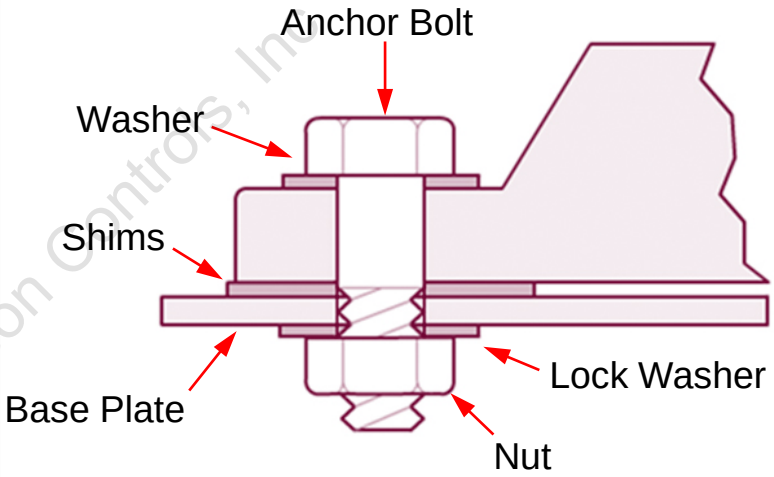

Copyright 2017 by Johnson Controls, Inc.

Improper use, type, or fit of anchoring bolts can make machine alignment impossible.

Examples of Incorrect Anchoring

Bolt Bound

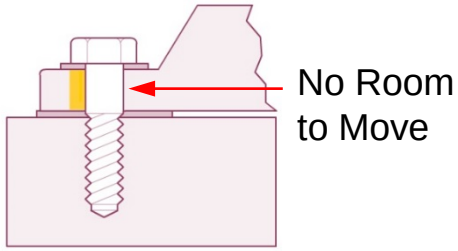

Prevents horizontal movement due to anchoring bolt touching sides of the anchor holes

Bolt Bottoms Out

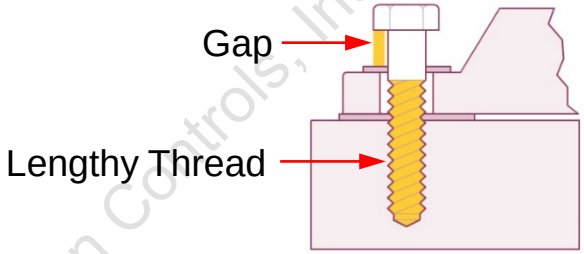

Loose anchoring bolt due to excessively lengthy thread

Excess Bolt Body

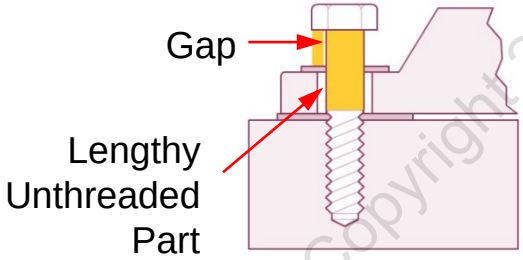

Loose anchoring bolt due to excessively lengthy unthreaded part

Dowel Effect

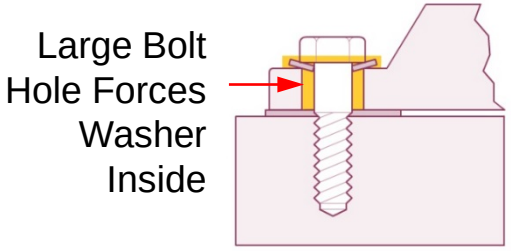

Prevents horizontal movement due to large bolt hole

Copyright 2017 by Johnson Controls, Inc.

Resolving Anchoring Issues

Bolt Bound

Can be corrected by loosening the anchoring bolts and shifting the machines to align the base plate mounting holes, or turning down the anchoring bolts, or enlarging machine mounting holes

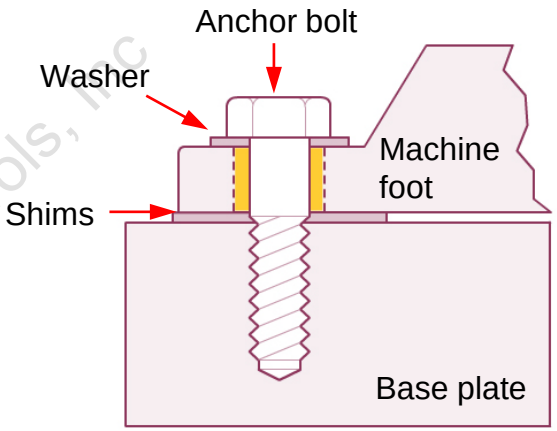

Dowel Effect

Can be corrected by using machine washers two to three times thicker than the original washer

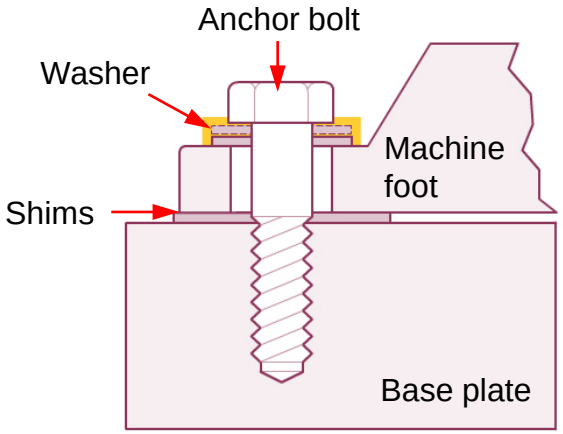

Copyright 2017 by Johnson Controls, Inc

Discussion—Anchoring Equipment

- What issues have you faced with machine anchoring that posed an obstacle to alignment?
- How did you resolve such issues?

Copyright 2017 by Johnson Controls, Inc



Piping Strain

Ensure that all machines to be aligned are free from piping strain.
Piping strain could be caused due to:

- Inaccurate installation of pipe and piping connections
- Thermal expansion created by temperature of liquids flowing through the pipe

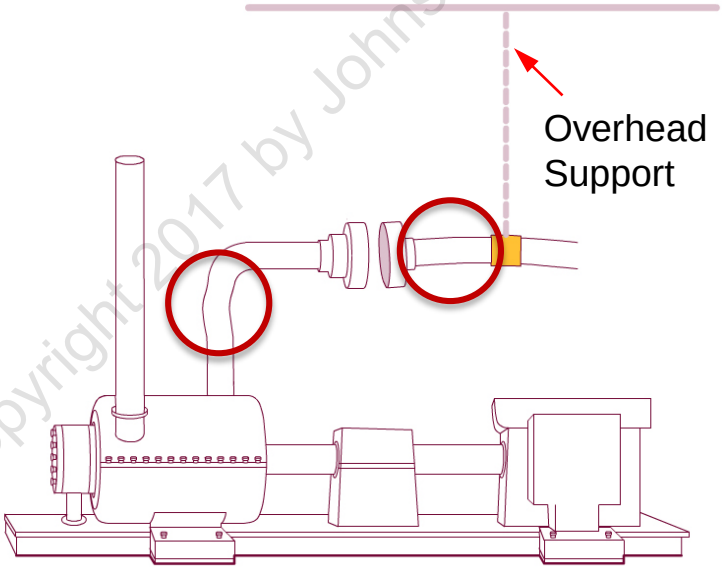

Copyright 2017 by Johnson Controls, Inc.

Piping Strain (Cont'd.)

Piping strain can be eliminated by:

- Performing the initial alignment with unattached pipes. When unattached, the piping must be supported independently.
- Using flexible plumbing connections

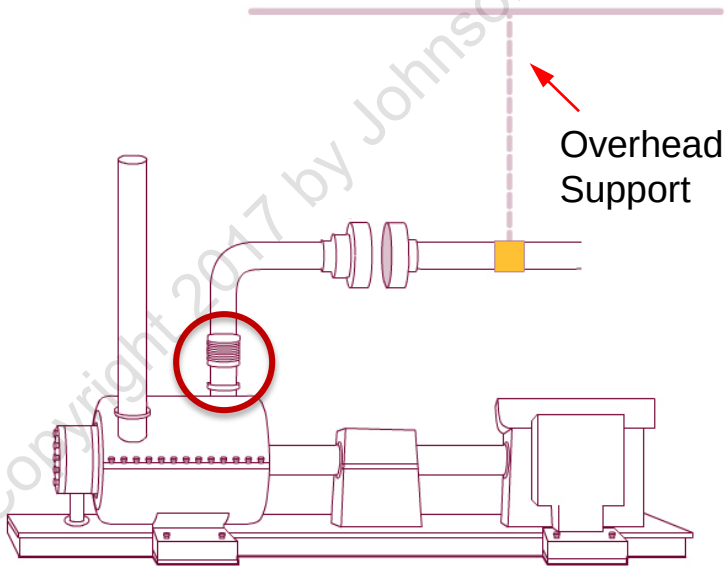

Copyright 2017 by Johnson Controls, Inc

Offset—Example 1

Identify the type of offset visible in this image.



Copyright Johnson Controls, Inc

Offset—Example 2

Identify the type of offset visible in this image.



Copyright 2017 by Johnson Controls, Inc

Checking Machine Conditions

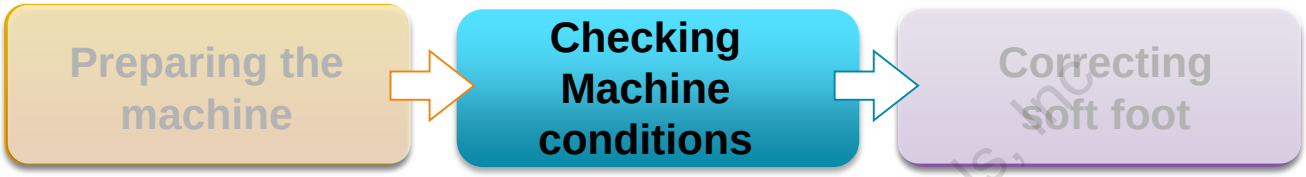

The machine conditions that need to be checked include:

- Alignment tolerances
- Dynamic movement
- Shaft axial float (endplay)
- Coupling gap
- Dial indicator sag
- Coupling and shaft run out (offset)—design or allowable (see the manufacturer's drawings)
- Motor magnetic center

Copyright 2017 by Johnson Controls, Inc.

Alignment Tolerances

Alignment tolerances define the maximum offset during normal operation, for a given machine.

Alignment tolerances are met when both offset and angular limits are satisfied.

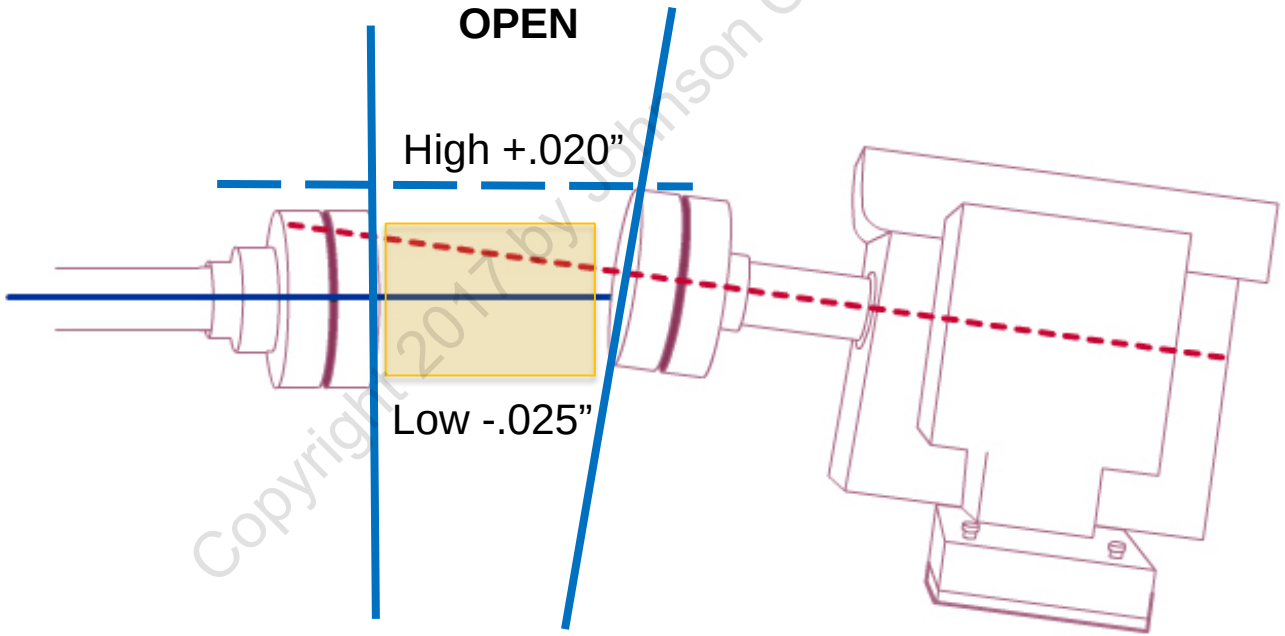

Copyright 2017 by Johnson Controls, Inc.

Thermal Expansion

Checking the dynamic movement due to thermal expansion is important as the equipment needs to be offset when it is in the idle state.
This is also known as cold offset.

- Measuring Thermal Expansion (Reference Manual)
- Typical Thermal Expansion Values
  - **Gear Box:** The estimated shaft rise is at 0.004” per foot of the shaft centerline height above the gear box feet
  - **Motor:** The estimated shaft rise is at 0.001” per foot of the shaft centerline height above the motor feet
  - **Turbine:** More rise in the shaft is observed

Copyright 2017 by Johnson Controls, Inc

Shaft Axial Float (Endplay)

Endplay of each shaft should be measured to ensure the amount is within the range specified.

Excessive endplay can have many adverse affects on machinery life, as well as on the accuracy of some alignment methods.

Copyright 2017 by Johnson Controls, Inc.

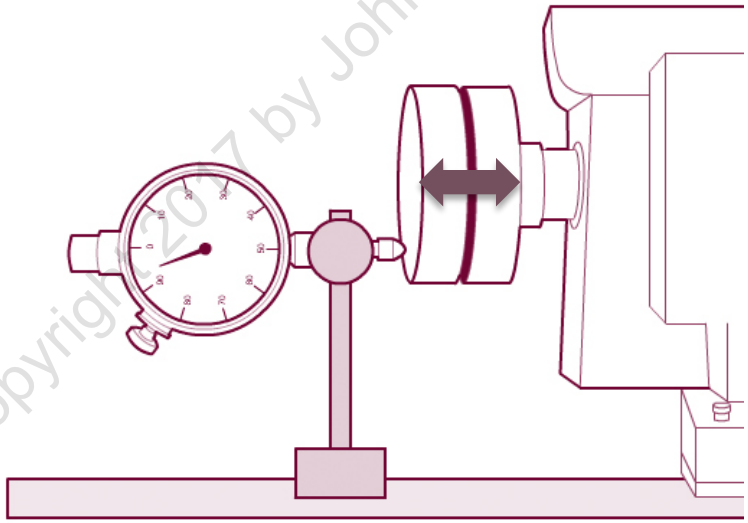

Coupling Gap

The gap between the coupling faces should be measured to ensure the amount is within the range specified.

Incorrect setting of the axial gap can have many adverse effects on machinery life, including excessive bearing thrust loads, premature motor failure, etc.

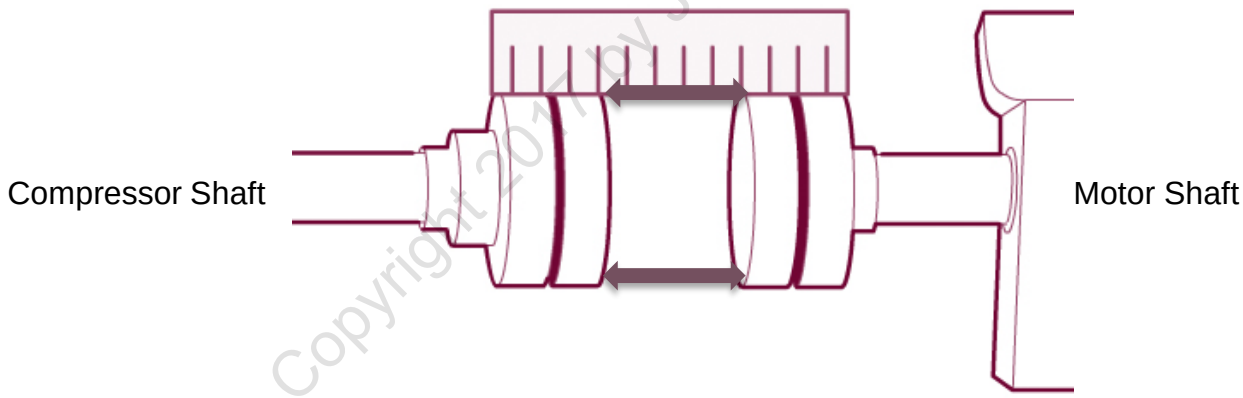

Copyright 2017 by Johnson Controls, Inc

Coupling Gap (Cont'd.)



Dial Indicator Bar Sag

When using dial indicators to gather alignment readings, the amount of dial indicator bar sag must be determined and compensated for.

If this is not done, the readings and the alignment conditions will be erroneous.

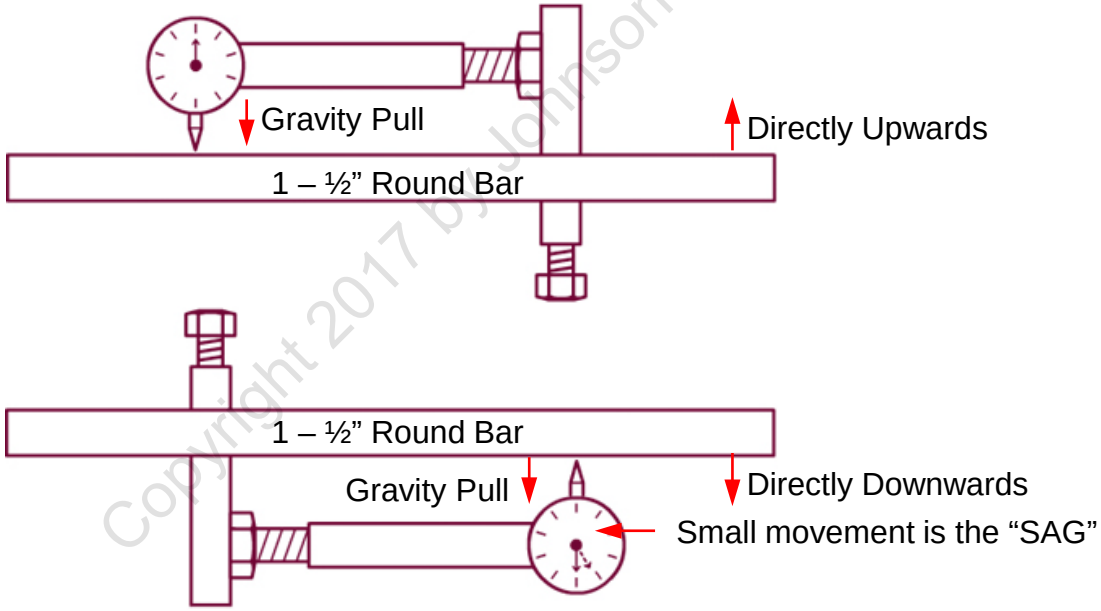

Copyright 2017 by Johnson Controls, Inc

Calculating Dial Indicator Bar Sag

Gravity pulls the needle downwards away from the shaft.

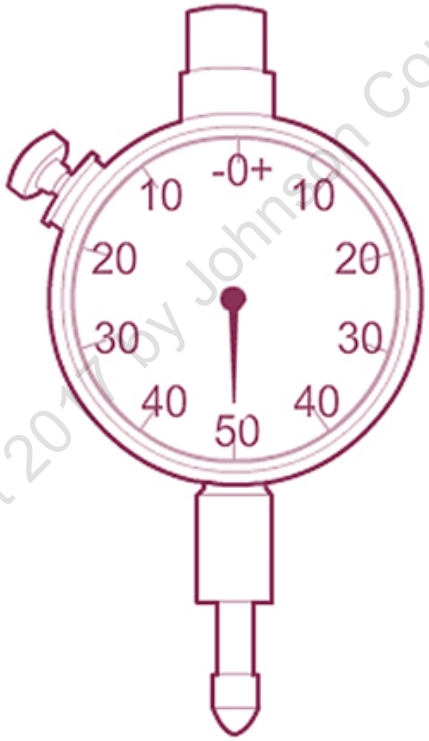

Copyright 2017 by Johnson Controls, Inc

Coupling and Shaft Runout

Runout of both machines' shafts, coupling hubs, and coupling faces should be measured to ensure the amount is within the specified range.

Excessive runout can have many adverse effects on machinery life, as well as on the accuracy of some alignment methods.

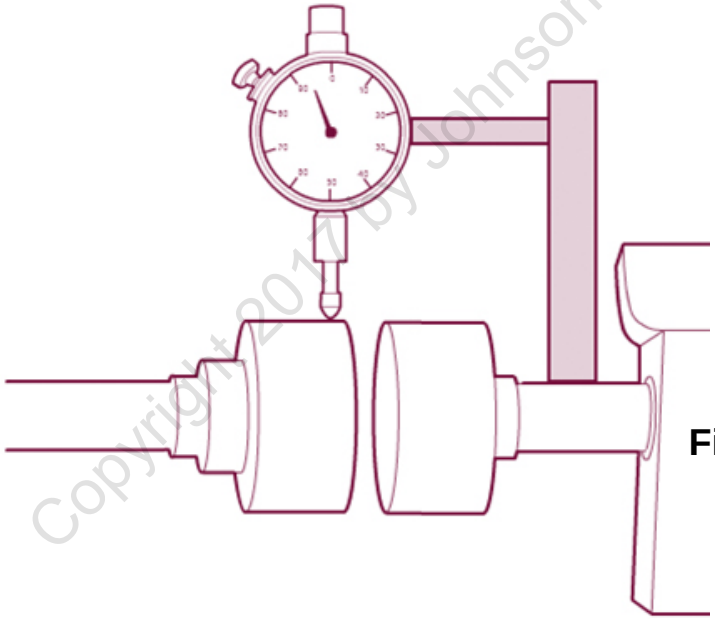

Copyright 2017 by Johnson Controls, Inc.

Detecting Shaft Runout

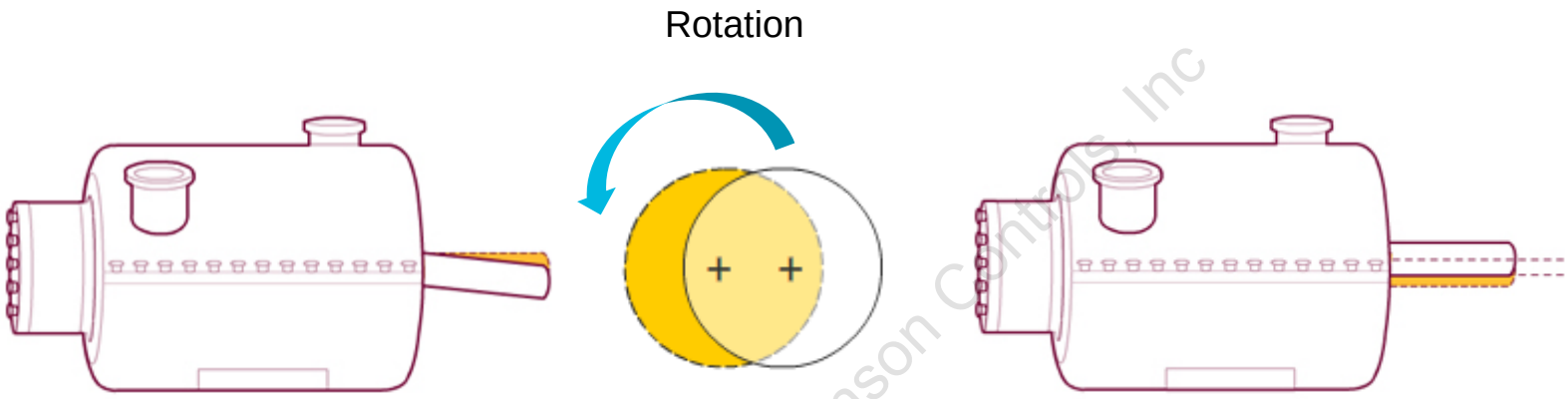

Copyright 2017 by Johnson Controls, Inc

- Eccentric shafts produce vibration
- Use dial indicators to detect eccentric shafts
- Fix eccentric shafts by changing machines
- You fix this by either a new shaft/rotor or by replacing the motor

Motor Magnetic Center

The shafts in motors with sleeve-type bearings generally shift axially (up to ½" or so) to their magnetic center once they are turned on.

Therefore, when setting the coupling gap, you need to know the running position of the motor shaft. This position may be indicated or may be found by ensuring the motor is level, running it, and marking the shaft position.

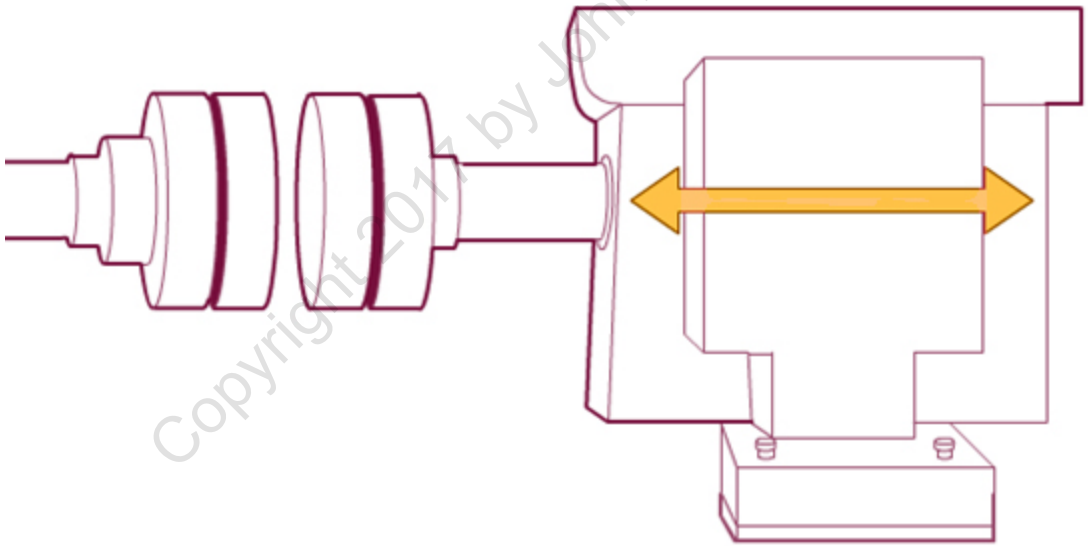

Copyright 2017 by Johnson Controls, Inc.

Our Policy prohibits printing. Save GREEN.

Motor Magnetic Center (Cont'd.)

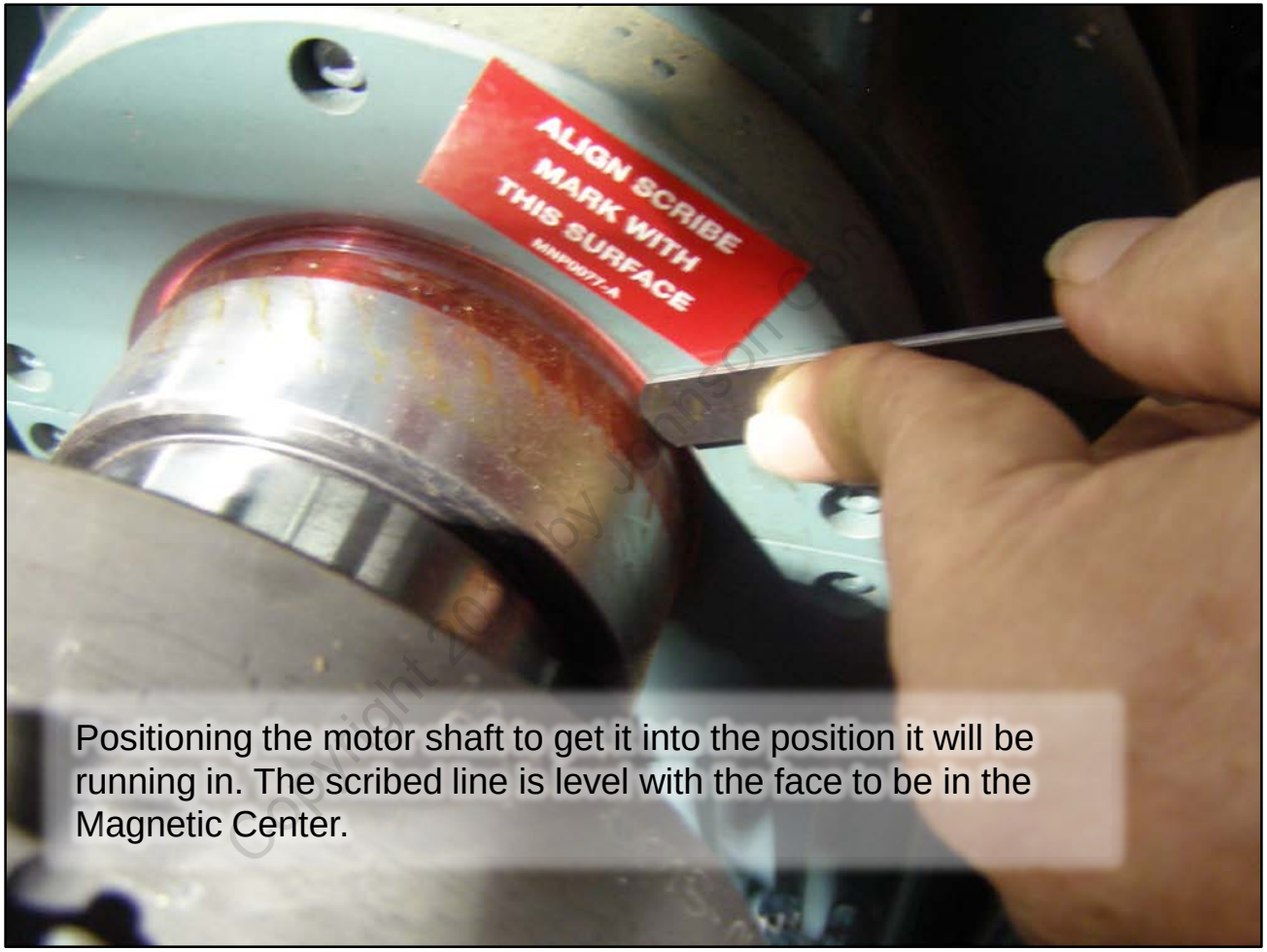

Positioning the motor shaft to get it into the position it will be running in. The scribed line is level with the face to be in the Magnetic Center.

Copyright 2011 by Johnson Controls

Correcting Soft Foot

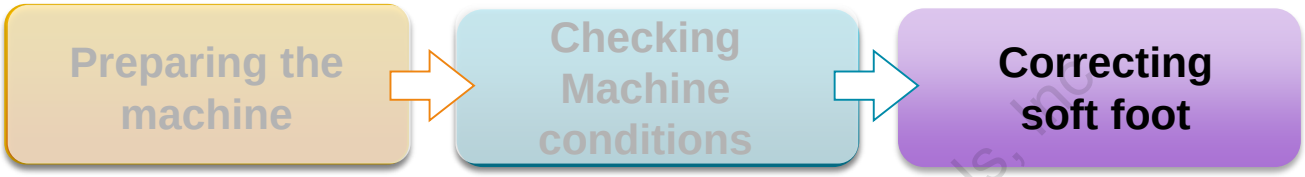

The last activity to perform before beginning the alignment procedure is to correct machine soft foot. In the next few slides, we will learn about:

- What is soft foot
- Types of soft foot
- Methods of correcting soft foot

Copyright 2017 by Johnson Controls, Inc.

What is Soft Foot?

Soft foot refers to the condition of incomplete contact between the machine feet and the base plate.

Either the machine feet and/or support surfaces are not flat or are not in the same plane.

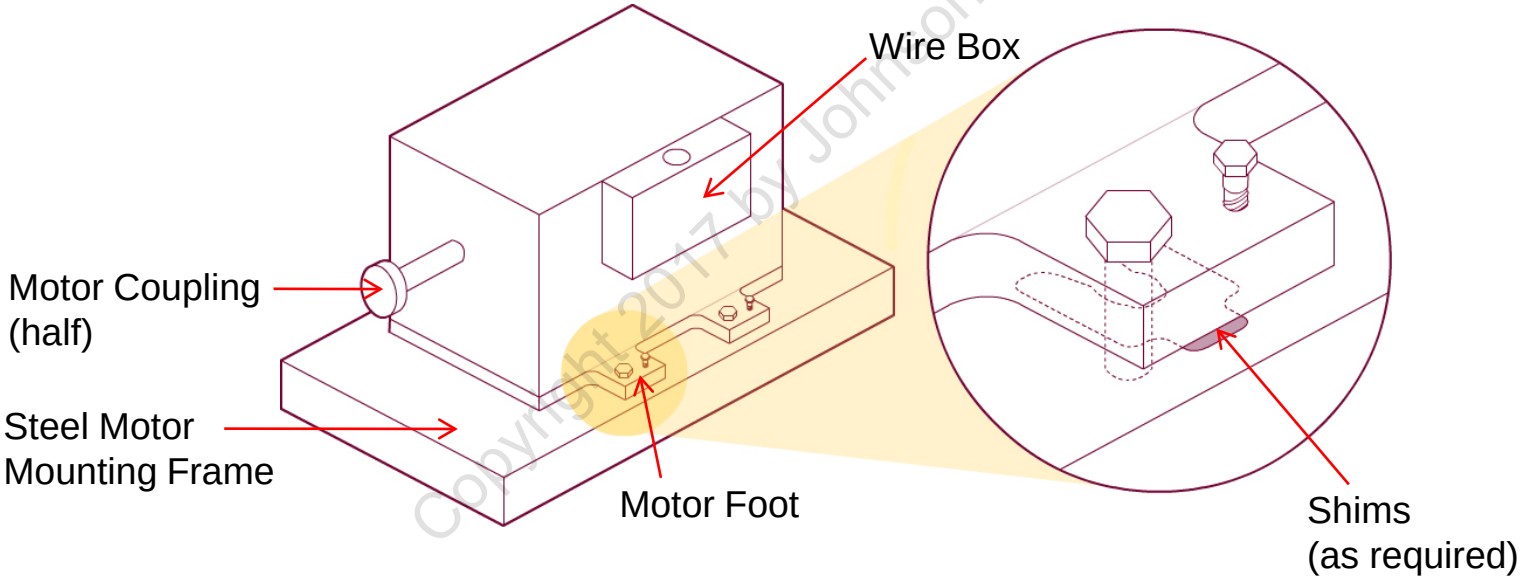

Copyright 2017 by Johnson Controls, Inc.

Contact surfaces should be very clean before starting the alignment.

Consequences of Soft Foot

If soft foot conditions are not corrected prior to alignment, these distort the machine frame, which leads to:

- Internal offset to bearing housings
- Shaft deflection
- Distorted bearings due to extra pressure
- Premature bearing and coupling failure
- Difficulty in shaft alignment

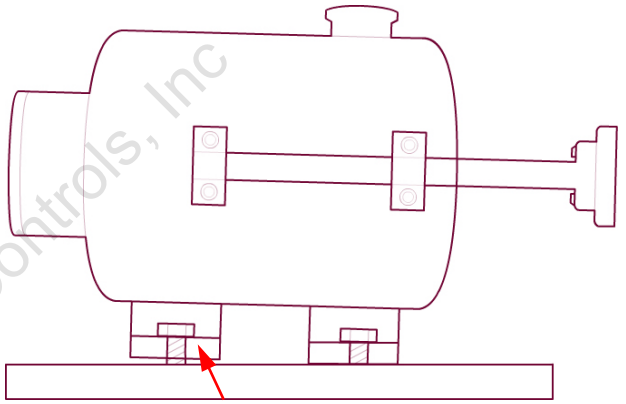

Soft Foot before Anchor Bolt Tightening

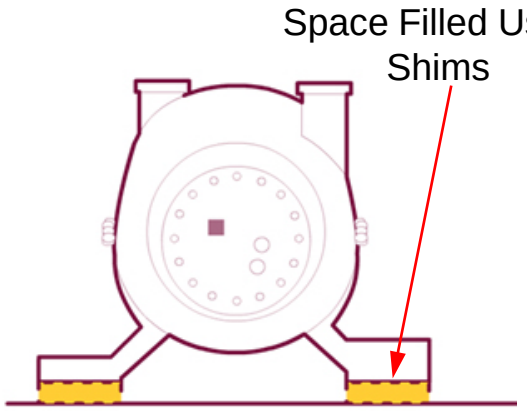

Copyright 2017 by Johnson Controls, Inc

Causes of Soft Foot

		Is it a cause?
One or more foot or mounting pads is short.	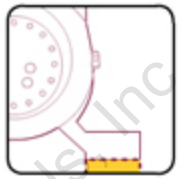	Yes
There is an angle between the foot and the base.		These are almost the same
Unequal thicknesses of shims.		
Excessive offset leading to coupling binding.	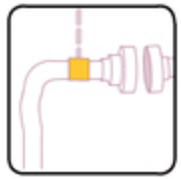	No
Piping strain leading to lifting, twisting, or pushing of the machine.		No

Copyright 2017 by Johnson Controls Inc

Types of Soft Foot

Parallel Soft Foot

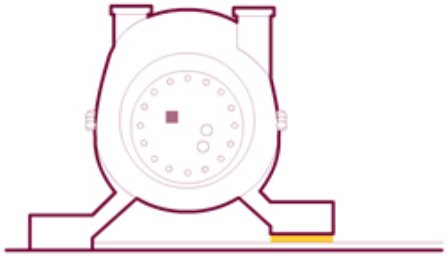

One or more feet are higher than the rest and parallel to the base plate

Angular Soft Foot

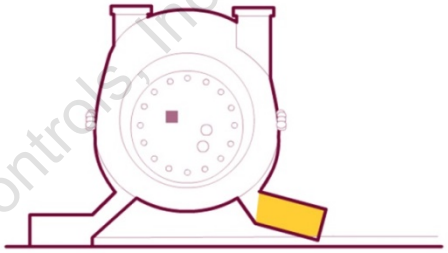

One or more feet are bent (rare, but could be from shipping)

Springing Soft Foot

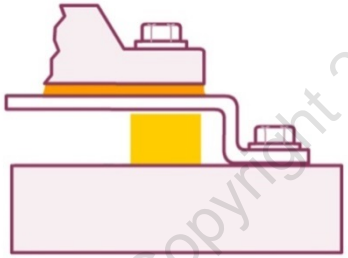

Imperfections between machine feet and base plate

Copyright 2017 by Johnson Controls, Inc

Measuring Soft Foot

At-each-foot method

Measures soft foot condition at each foot using a magnetic base dial indicator.

Shaft deflection method

Measures the extent by which the shaft deflects when anchoring bolts are loosened or tightened.

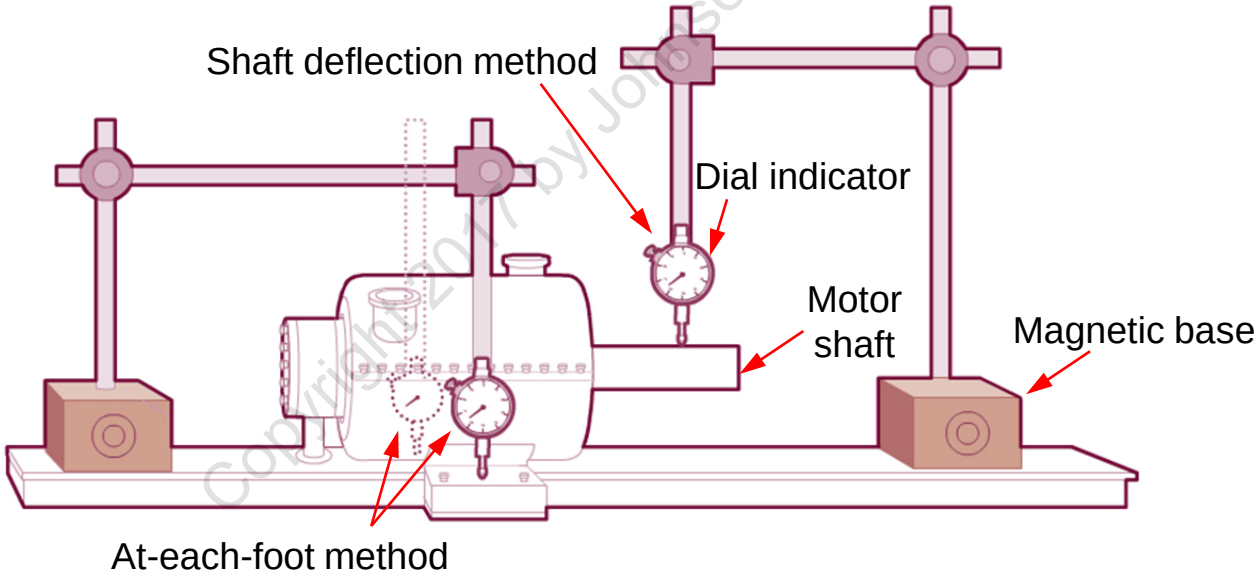

Copyright 2017 by Johnson Controls, Inc.

Topic Objectives

M Compressor Installation

1. Site Preparation
2. Assembly
3. Alignment
   - Fundamentals of alignment
   - Pre-alignment tasks
   - Steps in alignment
   - Post-alignment tasks
4. Commissioning

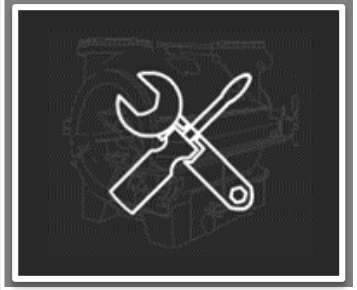

Steps in alignment

At the end of this segment, you will learn about:

- The fundamentals of alignment and offset
- Checks and precautions to be taken before you start aligning the OM chiller
- The steps of alignment
- Verifications to be made post-alignment

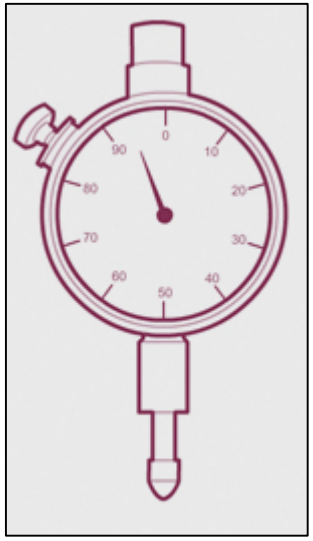

Copyright 2017 by Johnson Controls, Inc

Types of Coupling

There could be two couplings that need to be aligned in the case of a M Compressor.

High Speed Coupling (between compressor and gear box)	Low Speed Coupling (between gear box and motor)

One of these pieces will be the fixed unit. The others will be aligned to it. We also have some couplings with no gearbox.

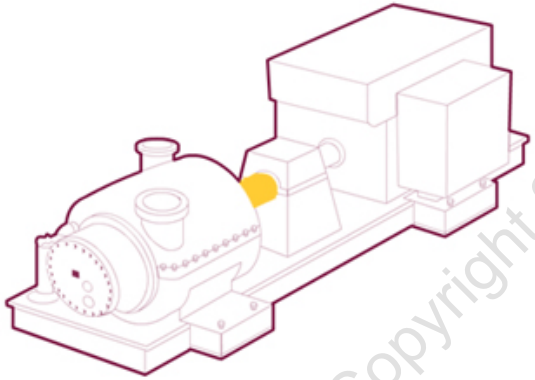

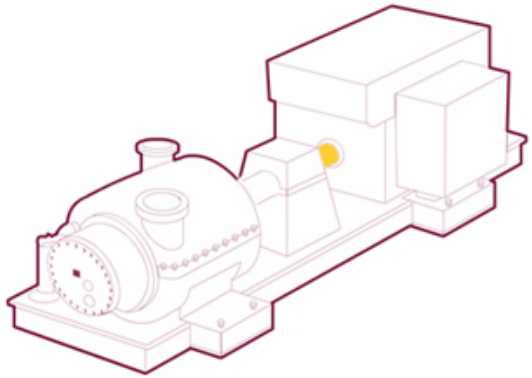

Copyright 2017 by Johnson Controls, Inc

The high level alignment steps for both coupling types are similar.

Steps in Alignment

Match mark and disassemble the coupling.

Determine the existing offset and angular offset.

Calculate the amount of movements that need to be made.

Perform the necessary machinery movements, repeat as required.

Check and record final readings to drawing limits.

Reassemble the coupling.



We will first review the steps for a high speed coupling.

Copyright 2017 by Johnson Controls, Inc

YorkFlex Coupling

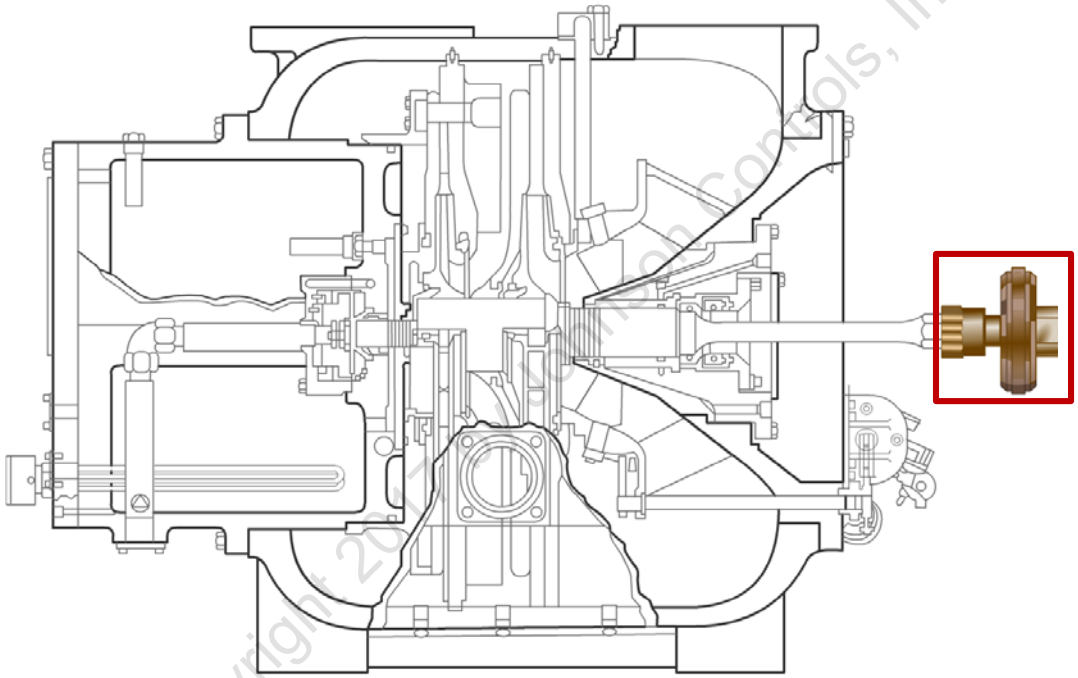

Copyright 20 Johnson Controls, Inc

York-flex coupling was installed on previous machines and has been around for decades.

YorkFlex Coupling (Cont'd.)



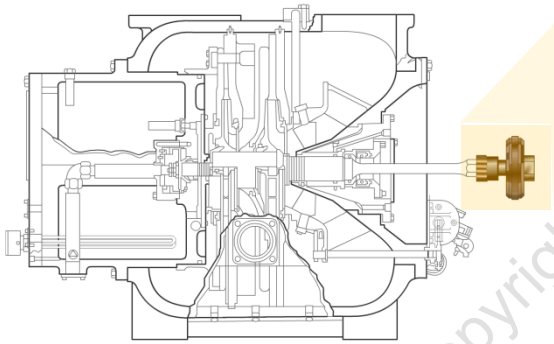

Copyright 2017 by Johnson Controls, Inc.

York-flex coupling was installed on previous machines and has been around for decades.

Discussion—YorkFlex Coupling vs. RiverHawk Coupling

YorkFlex coupling vs. RiverHawk coupling

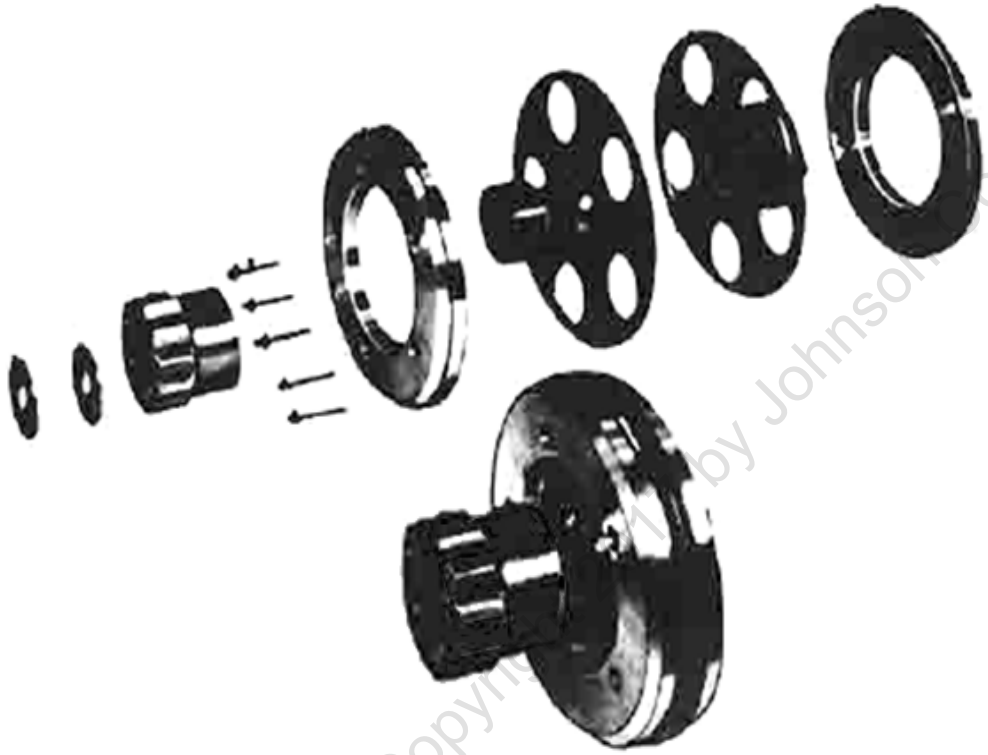

Copyright Owned by Johnson Controls, Inc



160.71.N2

Checking for Flat Mounting Plane

Before taking any readings, the drive components must rest on their shims and base.

Check for flat mounting plane (soft foot) and correct it as follows:

- With all bolts tight, use a dial indicator to take a reading at 12 o'clock position. Loosen one foot and observe the indicator. The indicator reading difference of more than 0.002" indicates an uneven mounting plane.
- Adjust the unevenness by adding shims under the loosened foot and the foot diagonally opposite to it. Do this until tightening and loosening the foot either does not change the dial indicator reading or changes it within the tolerance limit.
- Repeat the above two steps with the adjacent foot, if loosening one foot does not work.

Copyright 2017 by Johnson Controls, Inc

Steps in Alignment

Match mark and disassemble the coupling.

Determine the existing offset and angular offset.

Calculate the amount of movements that need to be made.

Perform the necessary machinery movements, repeat as required.

Check and record final readings to drawing limits.

Reassemble the coupling.

Copyright 2017 by Johnson Controls, Inc

Rim and Face Method

While many different methods can be used to determine existing offset, we mostly use the Rim and Face Method.

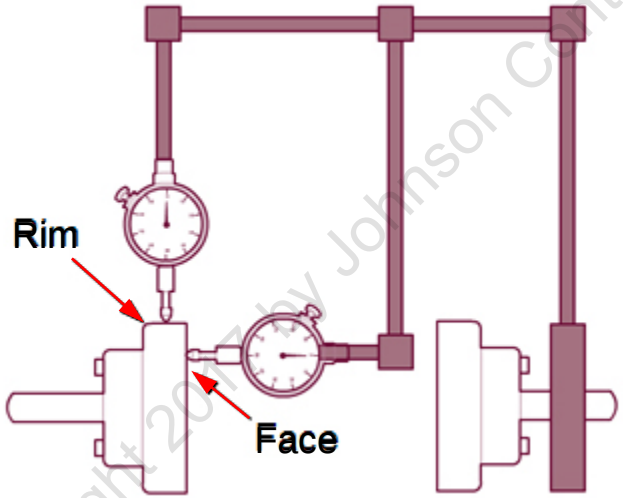

Copyright 2017 by Johnson Controls, Inc.

- Uses two dial indicators to measure the rim as well as the face of a coupling.
- Measurements taken at the rim position directly under the stem of the dial indicator point to the offset.
- Difference in the readings of the “face” dial indicators points to angularity.

Using Dial Indicators

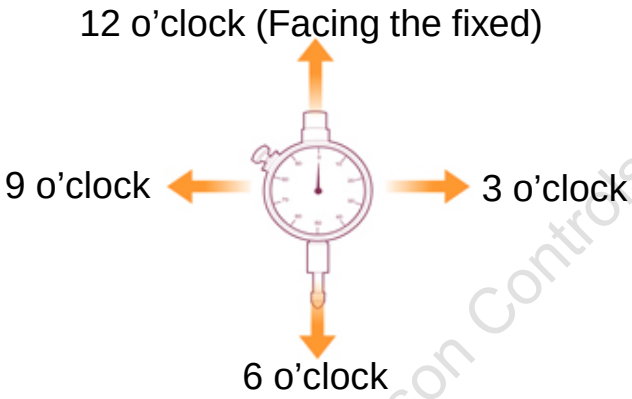

Copyright 2017 Johnson Controls, Inc

- Dial indicators are tools used for taking precise measurements
- The dial indicator must always be mounted perpendicular to the shaft
- Slow, forceful movements should be used when adjusting a dial indicator
- Both the shafts should be rotated together while keeping the couplings dissociated from each other
- Rotate the coupling hub and the dial gauges to 3 o’clock, 6 o’clock, 9 o’clock, and 12 o’clock and record the respective readings. The added up readings of 3 and 9 should be equal to that of 12 and 6.

Using Laser Alignment

Laser alignment equipment is used on short heavy shafts. A quill shaft of the OM compressor will bend under the weight of the laser equipment.



Johnson Controls, Inc.

Dial Indicator Readings

Total Indicator Reading (TIR) is used to determine total movement.

Two Positive Readings Subtracted

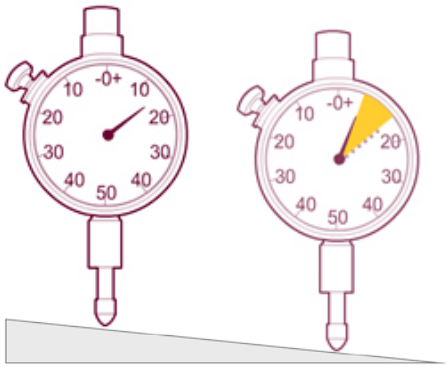

Reading Start: +.015”
Reading End: +.007”

TIR: .015-.007 = **.008”**

Two Negative Readings Subtracted

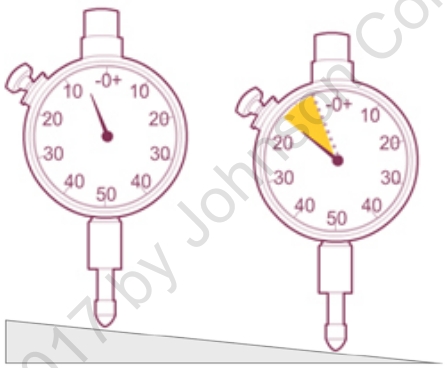

Reading Start: -.007”
Reading End: -.015”

TIR: .015-.007 = **.008”**

Positive and Negative Readings Added

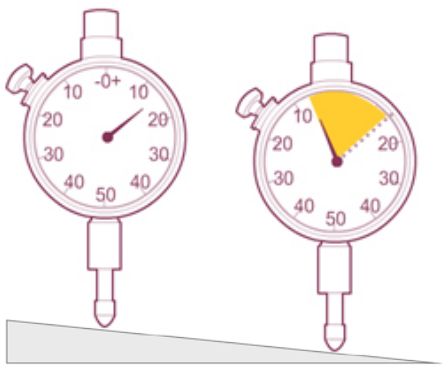

Reading Start: +.015”
Reading End: -.007”

TIR: .015+.007 = **.022”**

Copyright 2017 by Johnson Controls, Inc

Using Dial Indicators

Considering that the sum of the 12:00 and 6:00 position readings is the same as the sum of the 3:00 and 6:00 position readings indicate a good reading, identify the poor set of readings from among the following set of readings, validating using dial indicators:

	12:00	3:00	6:00	9:00
A	0.000	0.021	0.031	0.010
B	0.000	0.011	0.015	0.004
C	0.000	0.017	0.026	0.016
D	0.000	0.049	0.051	- 0.008

Copyright 2011 by Johnson Controls, Inc.



Mounting Dial Indicators

- Mount the two dial indicators on the driver shaft using a clamp
- Place the indicator stem in the center of the allowable space
- Magnetic dial indicator holders are not recommended
- Use Starrett #196A dial indicators or indicators of similar size and type
- Use a mirror to facilitate easy reading

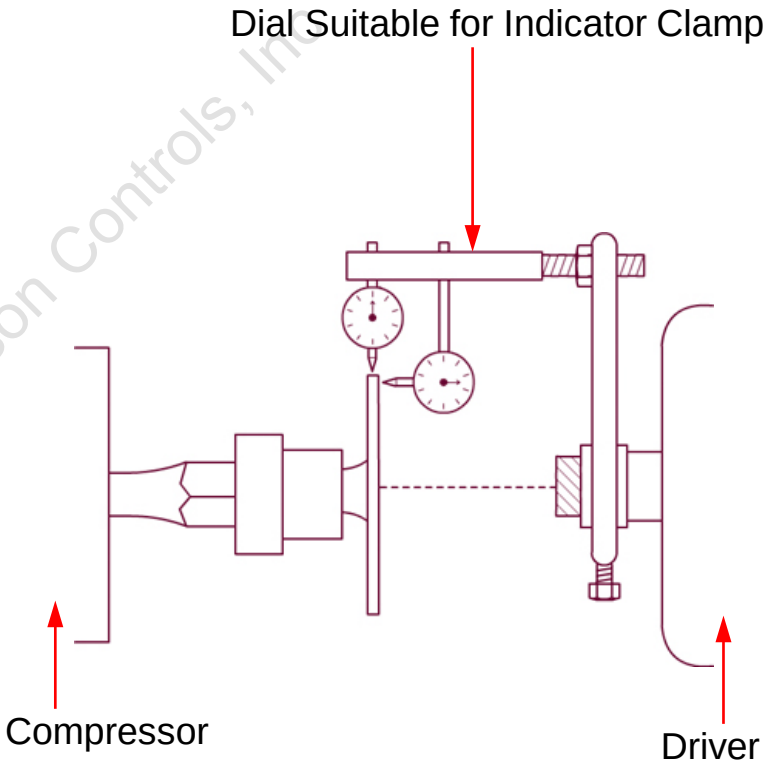

Copyright 2017 by Johnson Controls, Inc.

Sequence of Determining the Existing Offset

The existing offset should be determined in the following sequence:

1. Vertical Angular Alignment

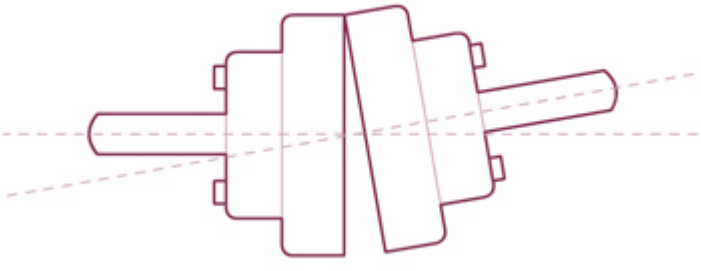

2. Vertical Parallel Alignment

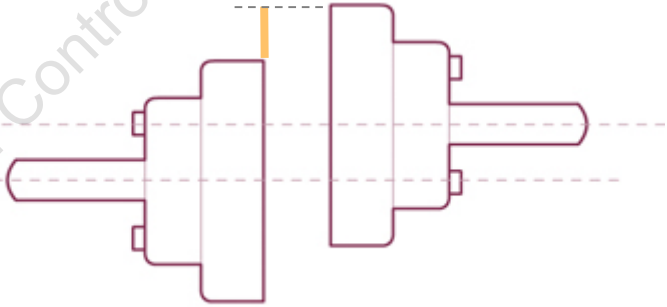

3. Horizontal Angular Alignment

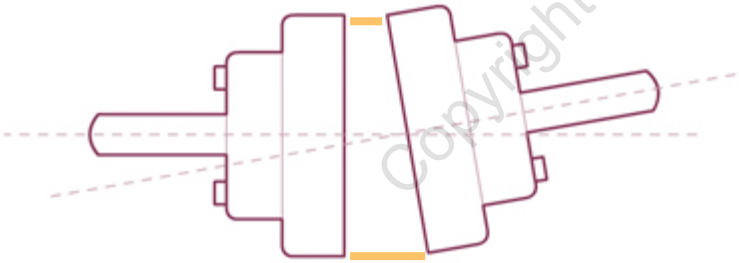

4. Horizontal Parallel Alignment

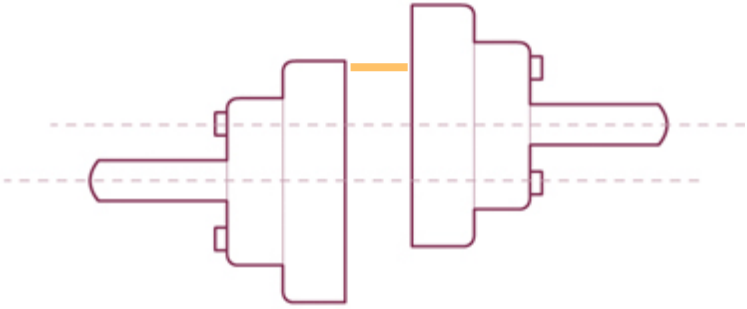

Copyright 2017 by Johnson Controls, Inc

Determining the Existing Offset

Take readings at a specific position on the required dial indicator to determine the existing offset.

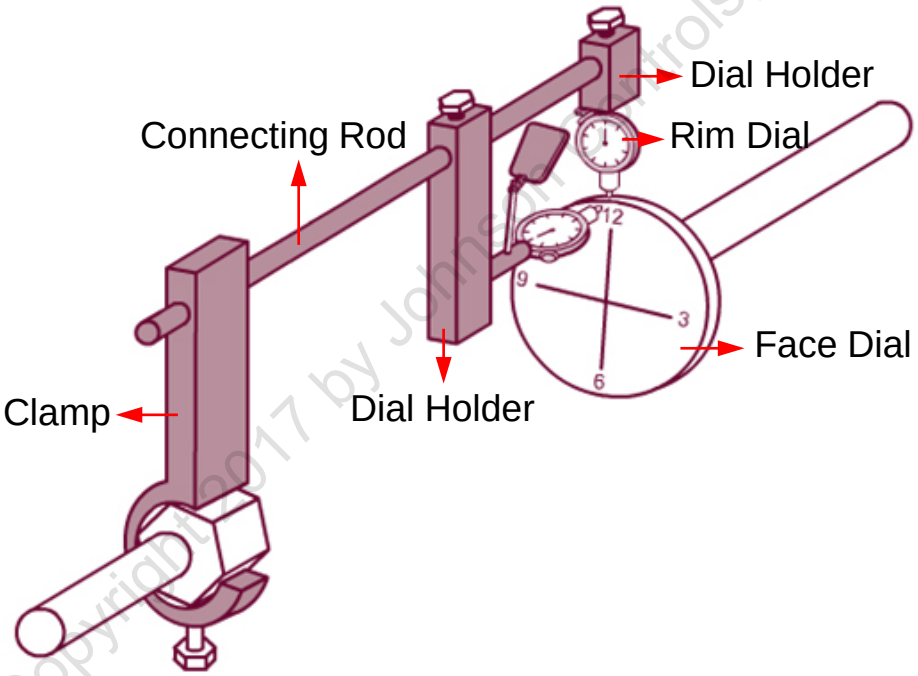

Copyright 2017 by Johnson Controls, Inc

Start at 12, set the dial to zero, and note zero.

Determining the Existing Offset (Cont'd.)

Take readings at a specific position on the required dial indicator to determine the existing offset.

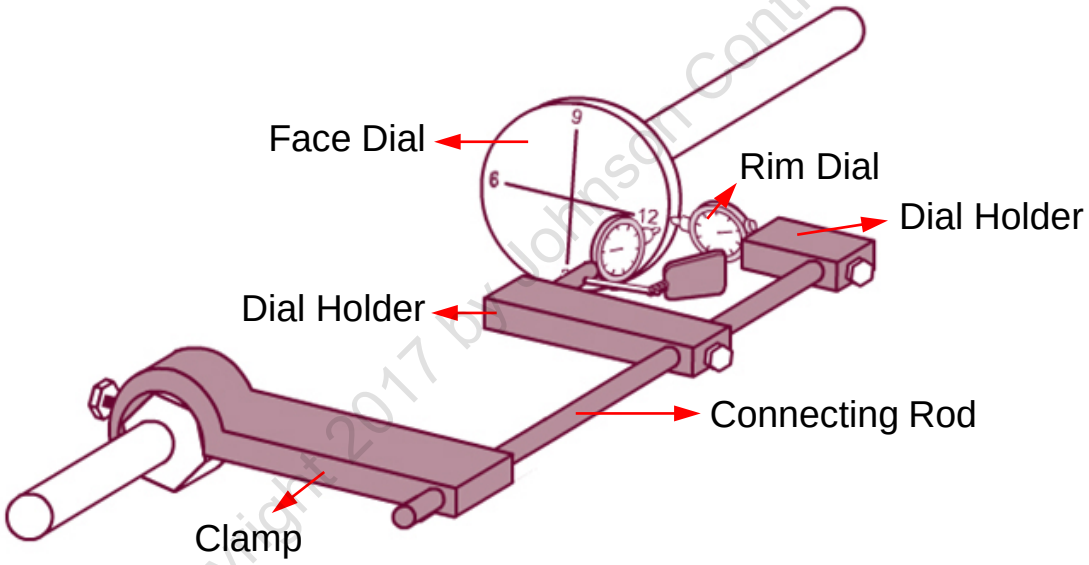

Copyright 2017 by Johnson Controls, Inc

Rotate both the coupling hub and the dial gauges to 3 o'clock and record the reading.

Determining the Existing Offset (Cont'd.)

Take readings at a specific position on the required dial indicator to determine the existing offset.

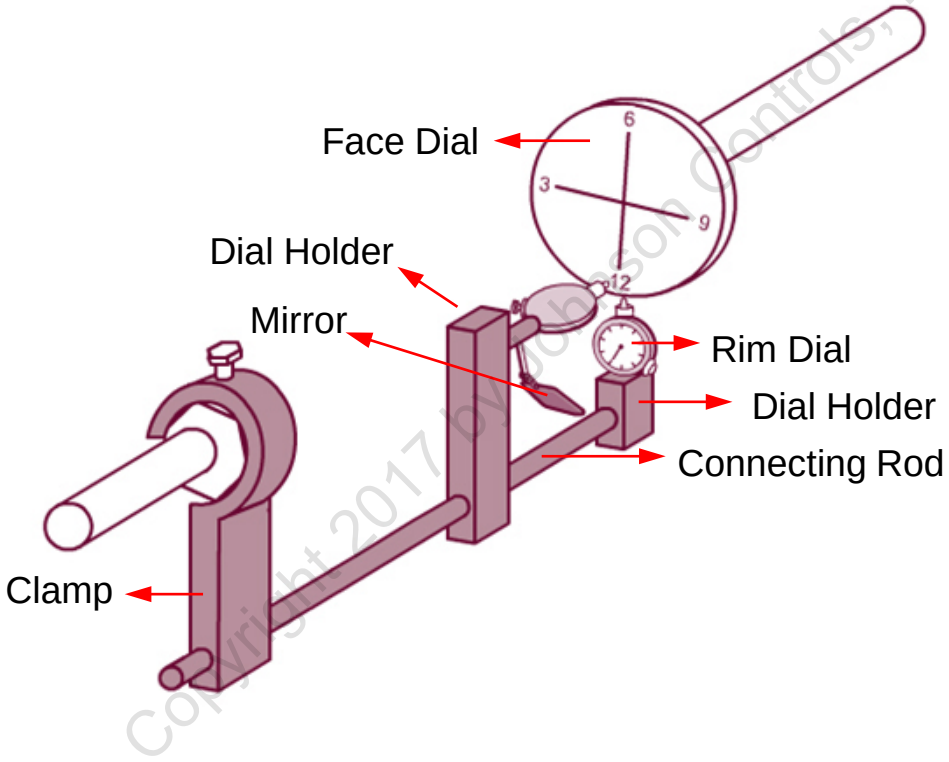

Copyright 2017 by Johnson Controls, Inc

Rotate both the coupling hub and the dial gauges to 6 o'clock and record the reading.

Determining the Existing Offset (Cont'd.)

Take readings at a specific position on the required dial indicator to determine the existing offset.

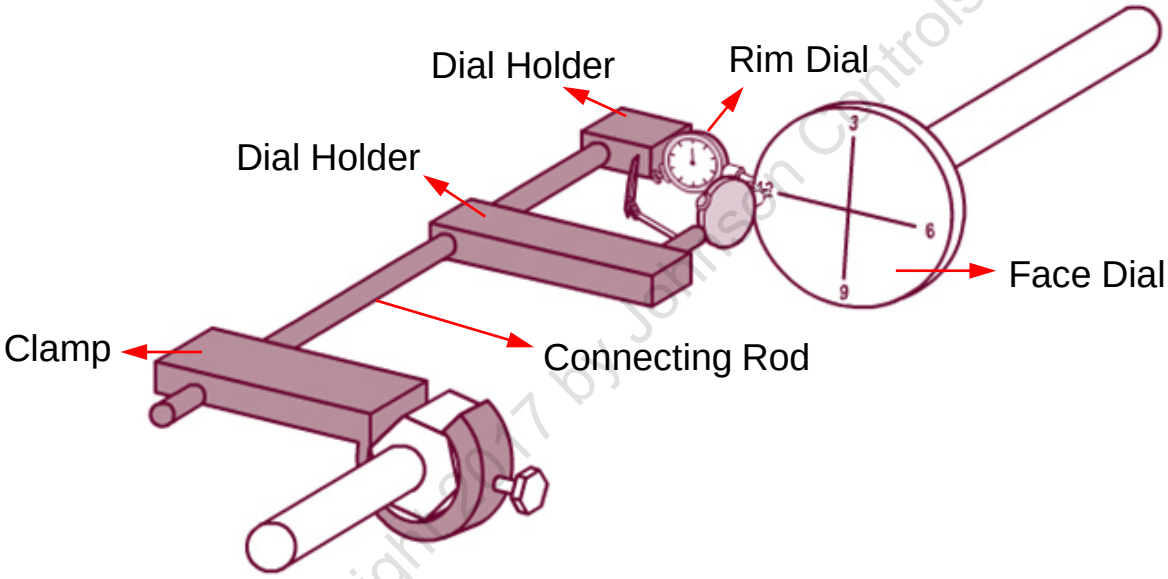

Copyright 2017 by Johnson Controls, Inc

Rotate both the coupling hub and the dial gauges to 9 o'clock and record the reading.

Determining the Existing Offset (Cont'd.)

Take readings at a specific position on the required dial indicator to determine the existing offset.

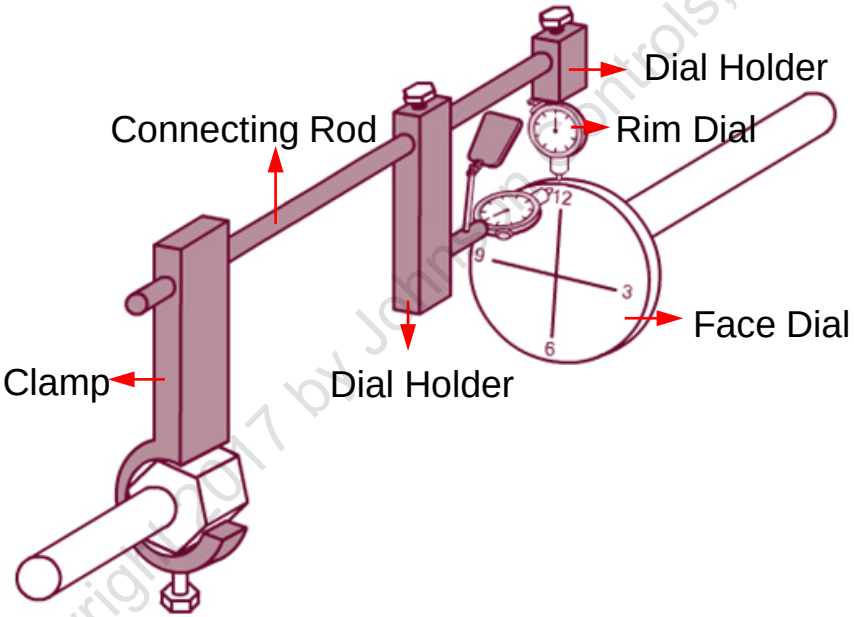

Copyright 2017 by Johnson Controls, Inc

Rotate both the coupling hub and the dial gauges to 12 o'clock and record the reading.

Recording the Readings

Record each reading using the log provided in the manual.

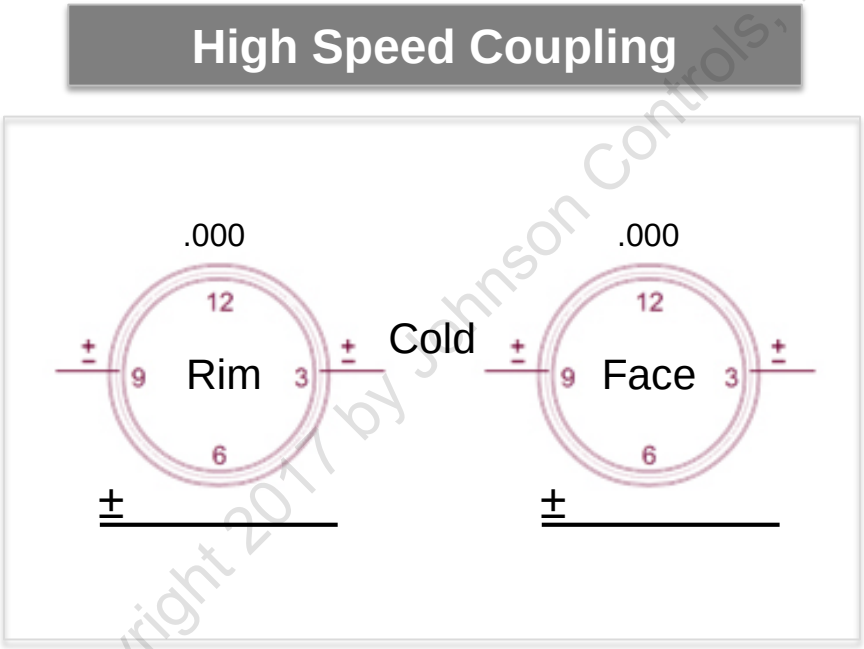

Copyright 2017 by Johnson Controls, Inc

160.71.N2

Interpreting the Readings

Vertical Angular and Vertical Parallel Alignment

- The amount of correction necessary is half of the indicator reading.
- A negative reading means the driver must be raised at the end away from the compressor.

This means moving the movable up and down.

Horizontal Angular and Horizontal Parallel Alignment

This means moving the movable side to side.

Copyright 2017 by Johnson Controls, Inc

Steps in Alignment

Match mark and disassemble the coupling.

Determine the existing offset and angular offset.

Calculate the amount of movements that need to be made.

Perform the necessary machinery movements, repeat as required.

Check and record final readings to the drawing limits.

Reassemble the coupling.

Copyright 2017 by Johnson Controls, Inc

Steps in Alignment (Cont'd.)

Match mark and disassemble the coupling.

Determine the existing offset and angular offset.

Calculate the amount of movements that need to be made.

Perform the necessary machinery movements, repeat as required.

Check and record final readings to the drawing limits.

Reassemble the coupling.

Copyright 2017 by Johnson Controls, Inc

Machinery Movements

Identify the machine (component) that will be stationary and the one that will be moved.

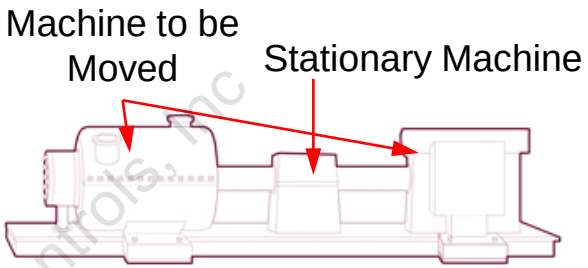

Ensure that the right size and type of jack screws are installed on the base plate to enable the horizontal movement of the machine.

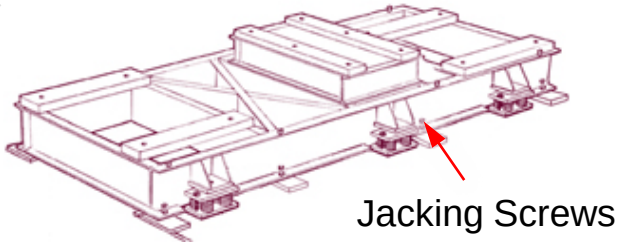

Have an inventory of good quality shims and spacers of different sizes to adjust the height of the machine.

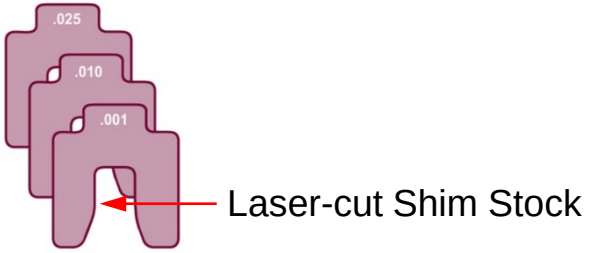

Copyright 2017 by Johnson Controls, Inc

Correcting Vertical Offsets

- A vertical offset is generally corrected by using shims
- The shim thickness required is as many times greater than the diameter scribed by the indicator stem



For example, if the diameter of the circle scribed by the indicator stem is 6" on the dial indicator for the vertical angular alignment reading at the 12 and 6 o'clock positions, then the amount of correction required is 0.006", and the base length of the driver is 24". Therefore, the shim thickness is:
24/6 x 0.006" = 0.024"

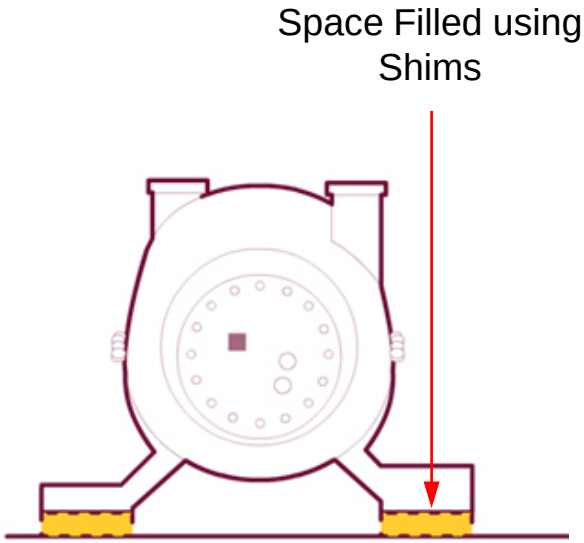

Copyright 2017 by Johnson Controls, Inc

Using Shims and Spacers

- Use laser-cut stainless steel shims with the size printed and not stamped on them
- Use a maximum of five shims and spacers for each foot of the machine
- Use no more than five shims in a stack
- Do not use multiple shims to fill a gap that can be blocked by using a spacer
- When using shims and spacers, select a combination that keeps their number to a minimum
- Place the printed side of each alternate shim facing down when measuring a stack of shims for its thickness
- A shim's thickness can be checked using a micrometer gauge

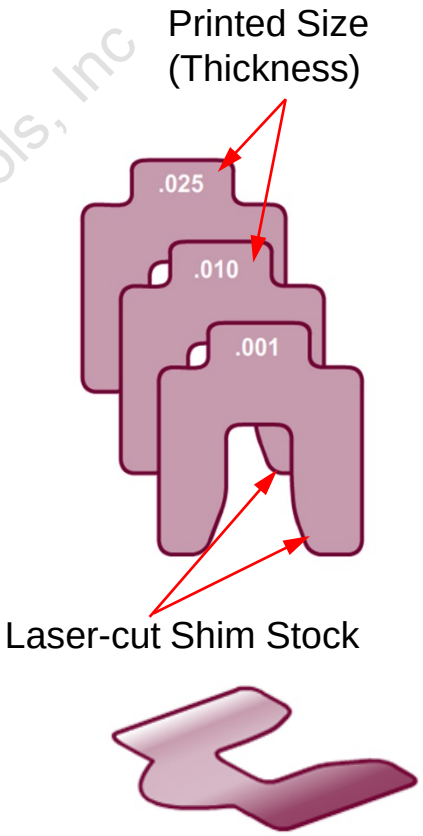

Copyright 2017 by Johnson Controls, Inc

Guidelines for Vertical Movements

- Double-check calculations or graphs to ensure that you have accurately determined the move
- Check the shim thickness with an outside micrometer. Shim thicknesses are not always what they are marked.
- After you make the shim changes, recheck the alignment
- Use consistent and correct torqueing procedures

Copyright 2017 by Johnson Controls, Inc.



Correcting Horizontal Offsets

- Correct a horizontal offset by using jack screws
- Clamp a dial indicator to the back edge of the base plate
- Make sure that the indicator is in line with the jack screw to be tightened
- Tighten the jack screw until the dial indicator shows the reading by which the machine is to be moved
- Use two dial indicators for accurate alignment



For example, if the machine is to be moved by 0.025", then tighten the jack screw until the dial indicator shows the reading, 0.025.

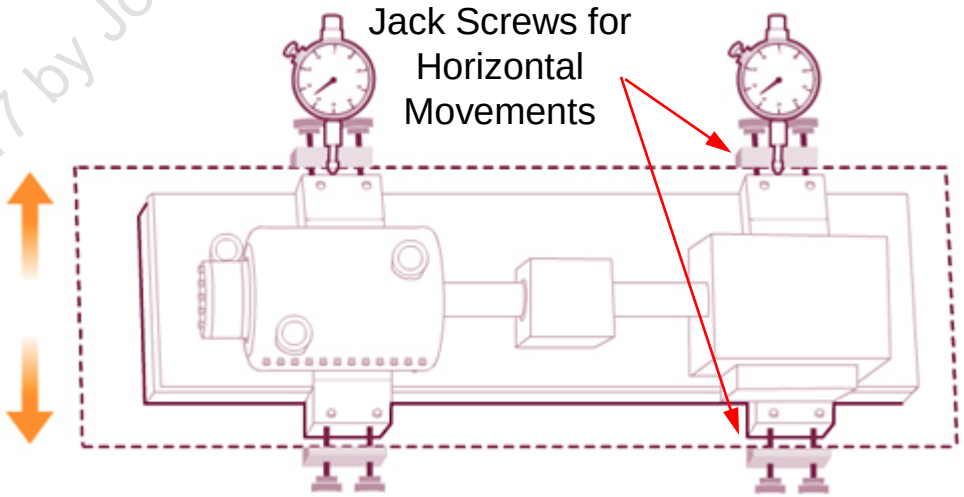

Copyright 2017 by Johnson Controls, Inc

Using Jack Screws

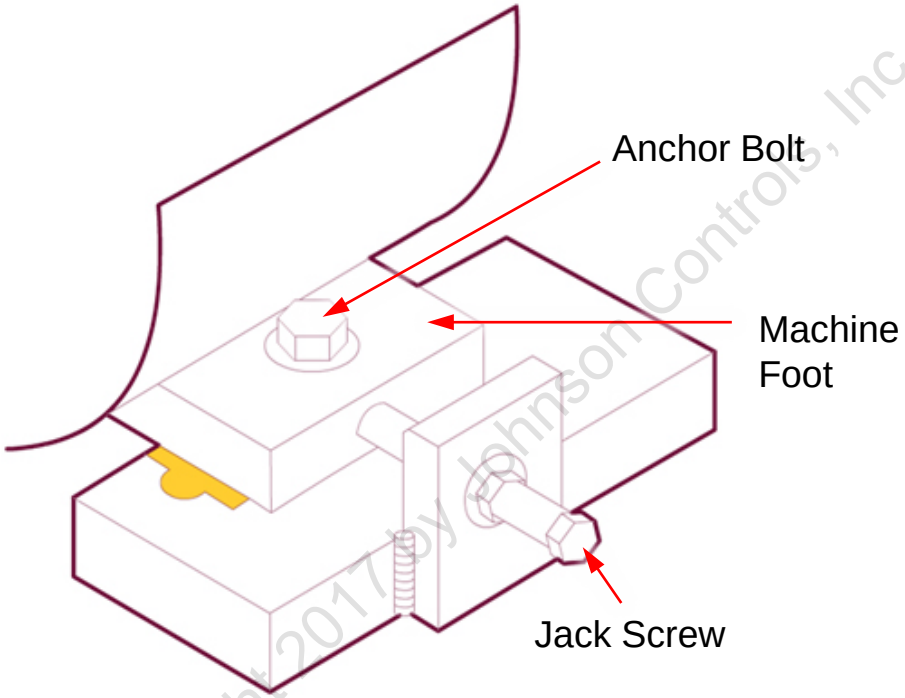

Copyright 2017 by Johnson Controls, Inc

- Correct installation pushes up the jack screws against the feet of the machine
- Simple tightening of the jack screws moves the machine

Guidelines for Horizontal Movements

- Zero the dial indicators at the 3:00 position
- Rotate the indicators to the 9:00 position
- Half the values on the dial indicators
- Move the front feet of the motor until the motor side indicator reads zero
- Move the back feet of the motor until the pump side indicator reads zero

Copyright 2017 by Johnson Controls, Inc



Correcting Angular Offsets

Formula for calculating angular misalignments:

G = g/d x D

Where,

G = Gap at the specified distance (in inches)

g = Known gap (in inches)

d = Known distance from zero (in inches)

D = Specified distance from zero

For example, the gap at 12.6" from zero can be calculated when the gap at 6" from zero is 0.042" as:

G = 0.042/6 x 12.6”

G = 0.0882"

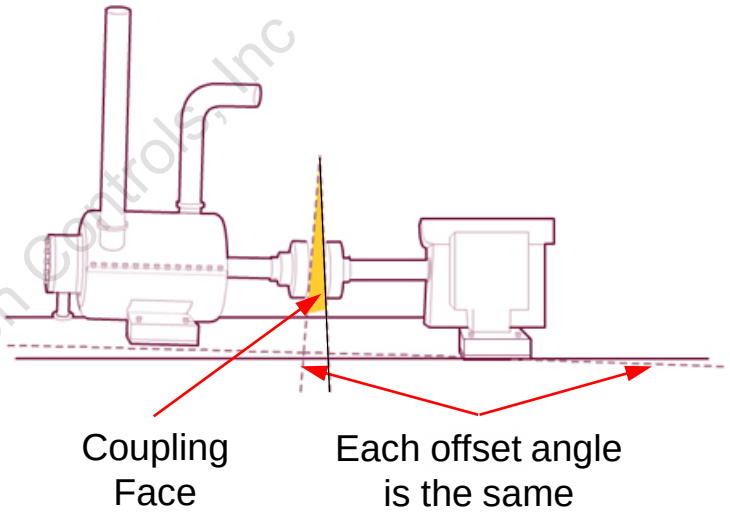

Each angle of misalignment is the same when measured at the feet of the machine or off the face of the coupling.

Copyright 2017 by Johnson Controls, Inc

Alignment Tolerances

After making all required machine movements, check that the alignment is within the tolerance limits.

Alignment Tolerances determine how precise an alignment should be.

Copyright 2017 by Johnson Controls, Inc.

Steps in Alignment

Match mark and disassemble the coupling.

Determine the existing offset and angular offset.

Calculate the amount of movements that need to be made.

Perform the necessary machinery movements, repeat as required.

Check and record the final readings to the drawing limits.

Reassemble the coupling to match the marks.

Copyright 2017 by Johnson Controls, Inc

Aligning a Low-speed Coupling

Let’s now look at the alignment of a low-speed coupling.

Low-speed coupling alignment is similar to high-speed coupling alignment except that it is done on the motor side of the machine and as per the motor manufacturer’s instructions.

Copyright 2017 by Johnson Controls, Inc

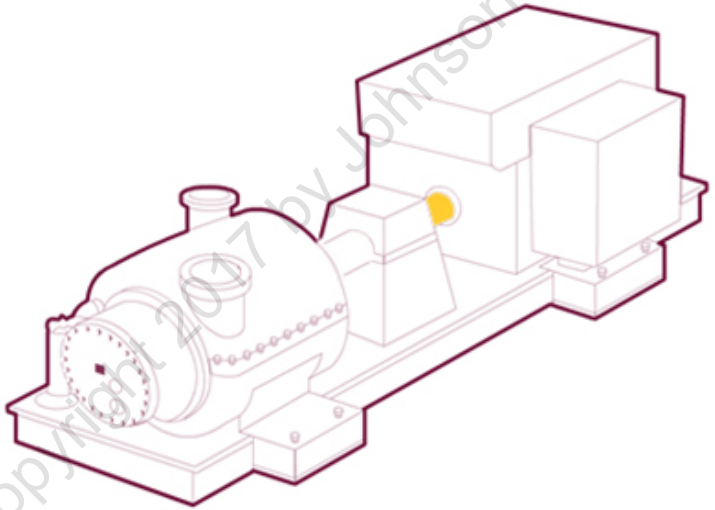

Low-speed Coupling
(Between a Gear Box and a Motor)

Guidelines for Low-speed Couplings Alignment with Speed Increaser Gear Box

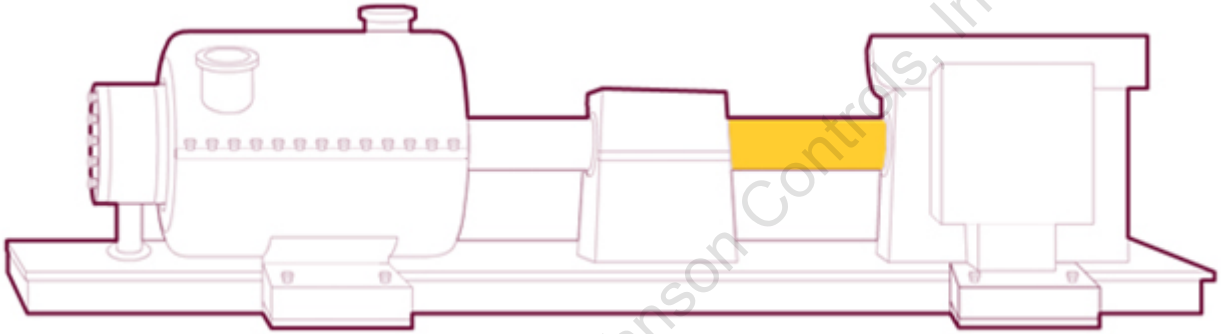

Copyright 2017 by Johnson Controls, Inc

- The axial alignment should be such that the space between the ends of both shafts, when the gear box is in the center of its end play and the motor shaft is at its magnetic center, must conform to the dimensions shown in the drawing
- This prevents excessive thrust on the motor bearings and allows the gear box to operate in the center of its axial float range without any external restriction

Measuring the End Play

- To check the end play of the gear box, push and pull hard enough to move the low-speed shaft against its thrust surfaces
- The end play of the motor without the ball bearings should be less than 0.005"
- The end play of the motor shaft is determined by the distance between the forward and reverse thrust pads
- If the magnetic center is not scribed, it needs to be determined by operating the motor uncoupled

Copyright 2017 by Johnson Controls, Inc.

Steps in Alignment

Match mark and disassemble the coupling.

Determine the existing offset and angular offset.

Calculate the amount of movements that need to be made.

Perform the necessary machinery movements, repeat as required.

Check and record final readings to drawing limits.

Reassemble the coupling.

Copyright 2017 by Johnson Controls, Inc

Step 1: Prepare the Site

Let's recap what we have covered so far!

Preparation of the site:

- If installing a new motor or compressor, the frame base must be clean of all dirt and the bottom of the compressor/motor
- All paint (if present) should be cleaned and removed from both the base and the bottom of the motor feet. These faces should be lightly abraded with an emery cloth or something similar.
- Ensure that all the required equipment (to do the alignment) is onsite

Copyright 2017 by Johnson Controls, Inc

Step 2: Determine the Existing Offset

- Due to the close distance between the faces of the low-speed coupling hubs, it is difficult to obtain accurate readings
- Dial indicators might be used, if space permits
- Take the indicator readings between the inside faces of the two hubs at the 3, 6, 9, and 12 o'clock positions, rotating both the hubs equally to eliminate run out

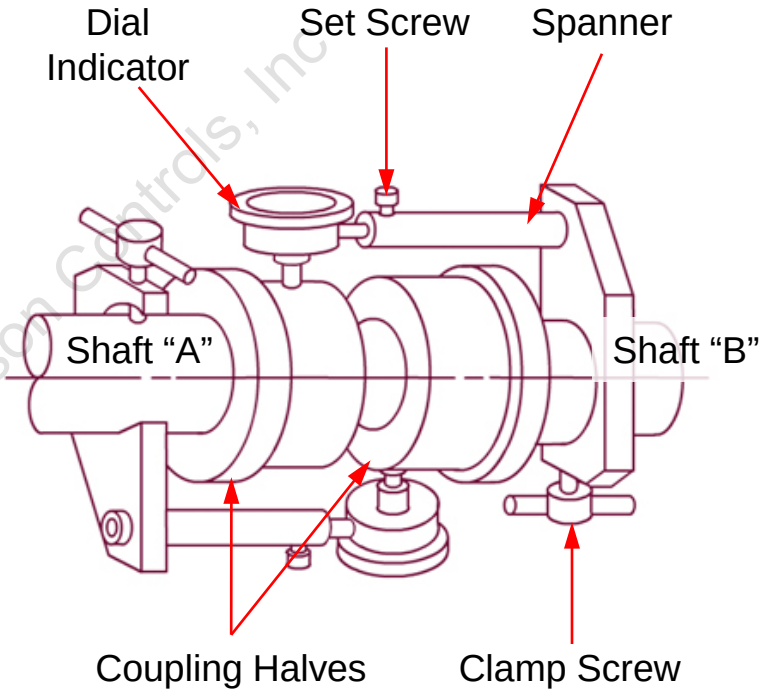

The above diagram shows the Reverse Dial Indicator method.

Copyright 2017 by Johnson Controls, Inc.

Step 2: Determine the Existing Offset (Cont'd.)

Record the readings in the log provided in the manual.

Low-speed Coupling

Readings taken between the Motor and the Gear

Clamp on the Gear Indicator on the Motor		Clamp on the Motor Indicator on the Gear
.000		.000
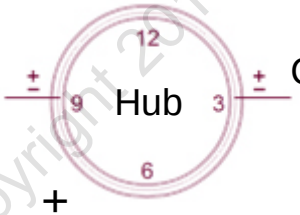	Cold	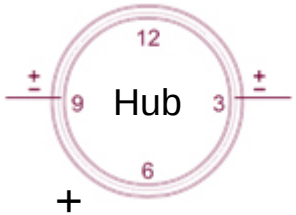
± _____		± _____

Copyright 2017 by Johnson Controls, Inc

160.71.N2

Calculating Offset Requirements

- Similar to high-speed couplings (compressor to driver couplings), the motor needs to be offset to account for thermal expansion during operation
- An additional correction is required to compensate for the running position of the shafts in the bearings under operating conditions. This should be in line with the bearing clearances.
- Similar to low-speed couplings (if the gear box is fitted), the motor needs to be offset to account for thermal expansion during operation
- Use the information in the Installation, Operations Manual, which will be from each of the manufactures

Copyright 2017 by Johnson Controls, Inc.

Key Takeaways

In this topic, you learned that:

- A shaft alignment involves:
  - Disassembling the coupling (especially in the overhaul work)
  - Checking the current coupling alignment
  - Calculating the offset requirements
  - Correcting the offset
  - Assembling the coupling
- The sequence for checking the current alignment is:
  - Vertical angular alignment
  - Vertical parallel alignment
  - Horizontal angular alignment
  - Horizontal parallel alignment



Copyright 2017 by Johnson Controls, Inc

Hot Alignment Checks

(Not recommended any more)

To ensure that the alignment is accurate when the machine is operating, a hot alignment check might be performed.

A hot alignment check might also be required if the machine experiences vibration when started.

A hot alignment check involves:

- Operating the machine under load to enable the compressor and the driver to reach normal operating conditions
- Shutting down the machine
- Disassembling the coupling
- Taking readings using dial indicators while the compressor and the driver are still near the running temperatures

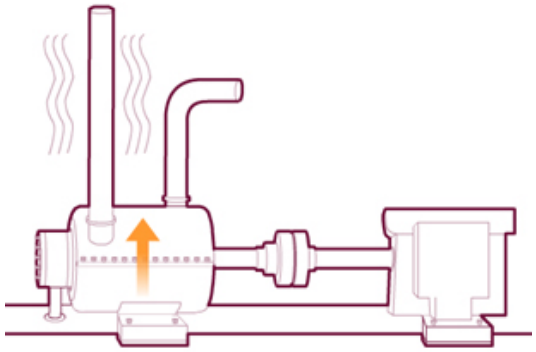

As per the current industry standards, a hot alignment is done only when deemed absolutely necessary.

Copyright 2017 Johnson Controls, Inc

Dowelling

- Minimize the coupling movement by dowelling the mounting feet at the coupling end of the compressor
- Screw the provided dowel pins through the mounting feet, shims, and sole plates
- Ream the drilled holes until the dowel pins fit well
- Finish reaming manually

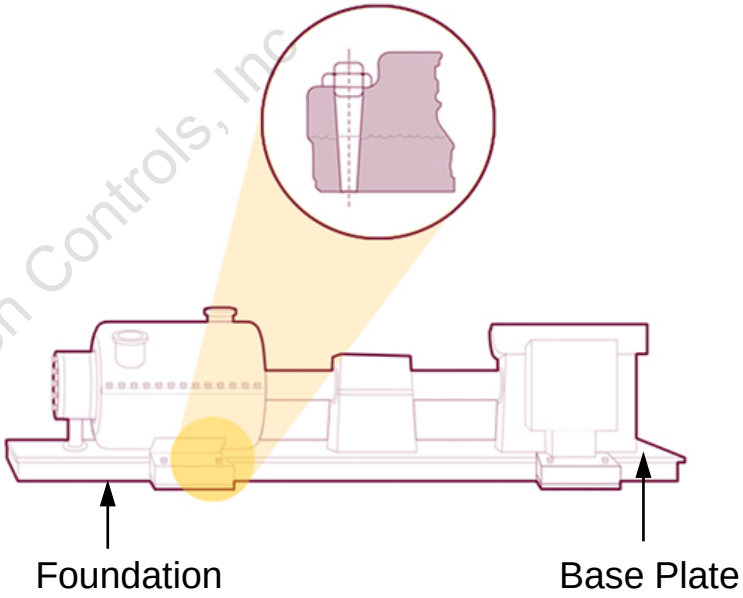

Copyright 2017 by Johnson Controls, Inc.

Do NOT hit the reamer with a hammer and never turn the reamer in the reverse direction.

Key Takeaways

- Post-alignment activities include initial dowelling, hot alignment checks (if required), piping strain verification, alignment checks for vibration under operating conditions, and maintaining a log of the final readings

Copyright 2017 by Johnson Controls, Inc.

We have gone away from dowelling. We also rely on a vibration monitor on many of our OM units.
Hot alignments are also a thing of the past as the time they take to uncouple the York-Flex coupling of a chiller is no longer hot.
What we need to insist is that once the technician understands the alignment is good, he should send a copy of the readings to York PA so that Engineering can check them out.



Any Questions?



Copyright 2017 by Johnson Controls, Inc

M Compressor_Startup Comissioning

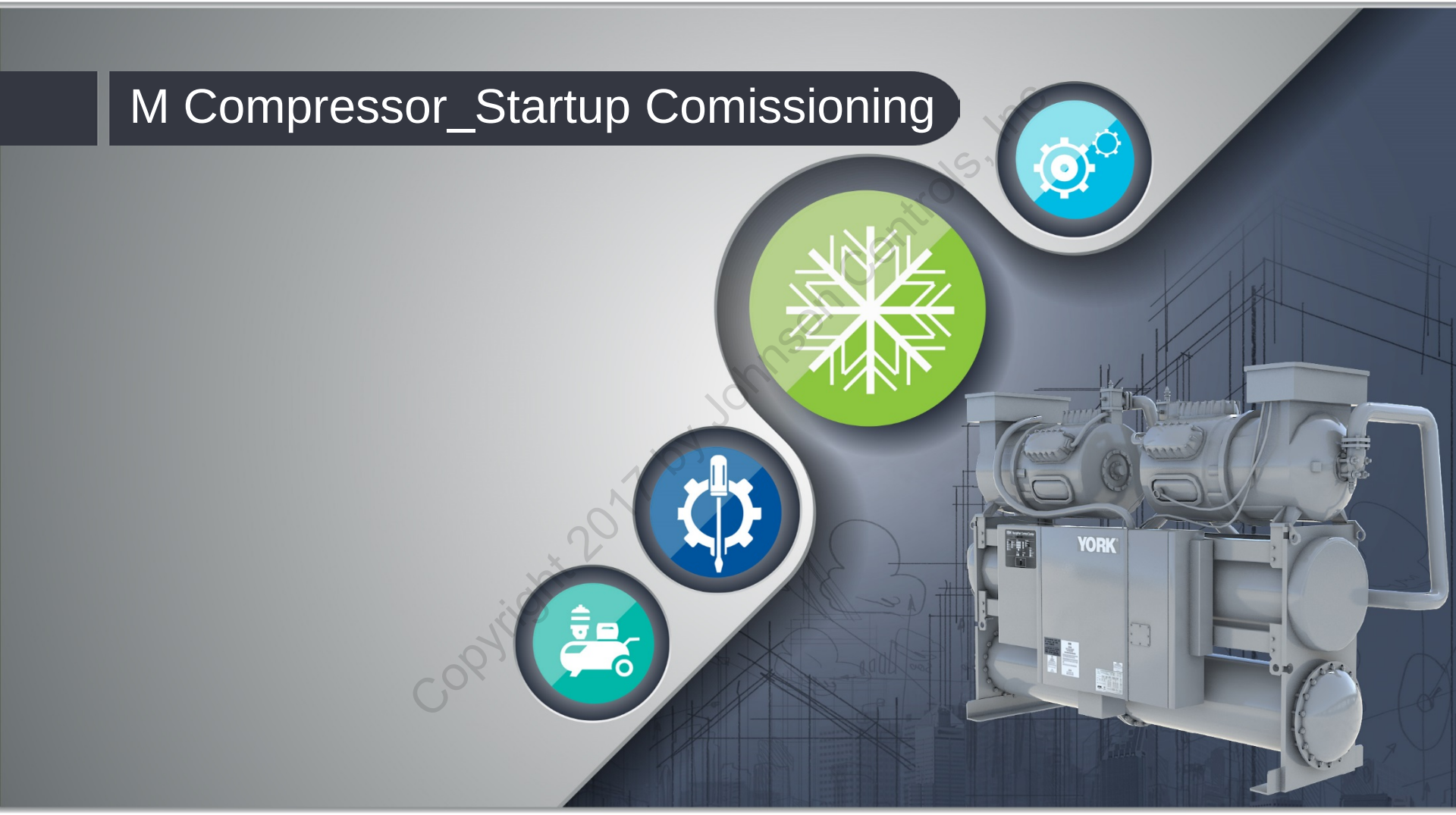

Copyright 2017 by Johnson Controls, Inc.

Topic Objectives

OM Installation

1. Site Preparation
2. Assembly
3. Alignment
4. Startup/ Commissioning

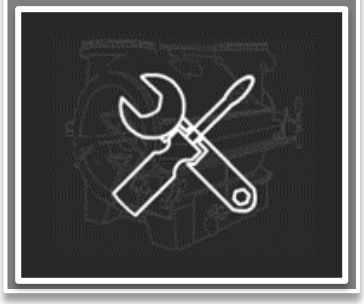

At the end of this topic, you will be able to:

- Describe the activities that need to be performed prior to commissioning an OM chiller
  - Verifying the installation
  - Inspecting chiller components
  - Adding and charging oil
  - Enabling water flows
- Explain the process of commissioning and starting up an OM chiller
  - Pressure and vacuum tests
  - Operational checks
  - Instructing the operators

Copyright 2017 by Johnson Controls, Inc

Steps of Commissioning

Commissioning the OM chiller involves the following steps:

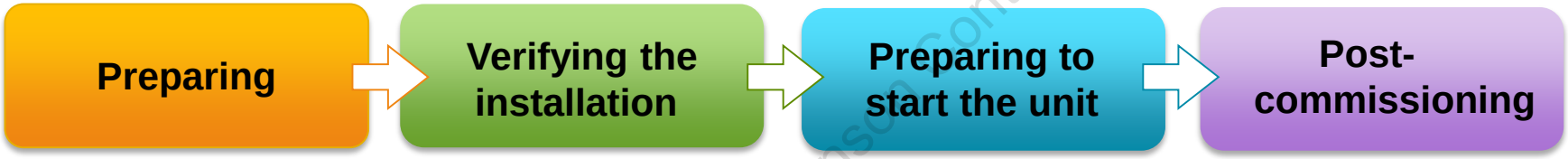

The person who is responsible for the commissioning of an OM chiller is the Project Manager. It is his/her responsibility to facilitate the correct contractors and service people to ensure that the commissioning of the chiller goes smoothly.

Copyright 2017 by Johnson Controls, Inc

Step 1: Preparing

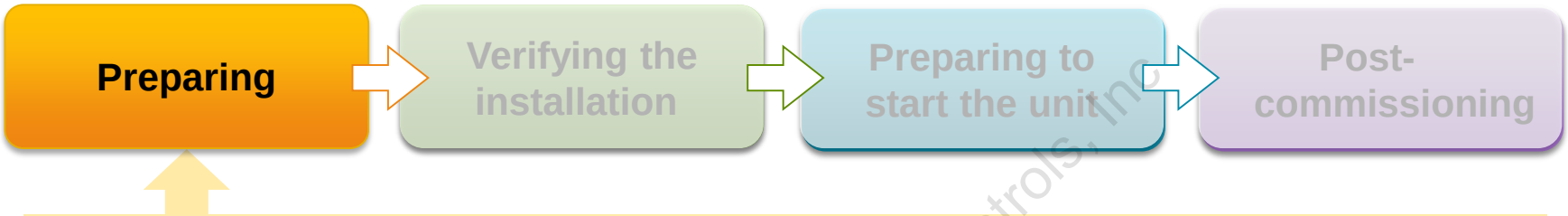

- Schedule a meeting with the customer to determine the pre-startup steps
- Collaborate with different contractors and Johnson Controls' service personnel
- Discuss the responsibilities/schedules

These are the responsibilities of the Project Manager.

Copyright 2017 by Johnson Controls, Inc.

Pre-startup Meeting

The Project Manager should schedule, attend, and/or receive information regarding the pre-startup meetings with the customer.



The agenda for these meetings should include:

- Establishing proper contacts
- Familiarizing everyone with the system function and its interface to site
- Discussing responsibilities/schedules, pressure test, evacuation and dehydration, control loop checks, site labor situations, etc.
- Ensure that all Johnson Controls/YORK® safety and local building regulations are followed



Contractor/customer must provide necessary assistance to Johnson Controls for successful startup of the chiller unit.

Copyright 2017 by Johnson Controls, Inc.

Pre-startup Meeting (Cont'd.)

People involved in the meeting may include: Field Service Technician, District Service Manager, Sales Engineer, Unit Design Engineer, Factory Service Representative or a Flying Squad Member, and Customer Participants.



Copyright 2017 by Johnson Controls, Inc.

Step 2: Verifying the Installation

Preparing → **Verifying the installation** → Preparing to start the unit → Post-commissioning

Check the following:

- Piping strain
- Coupling alignment
- Equipment dowelling (if required by the customer)



Copyright 2017 by Johnson Controls, Inc.

Verifying Piping Support



Verifying Piping Support (Cont'd.)

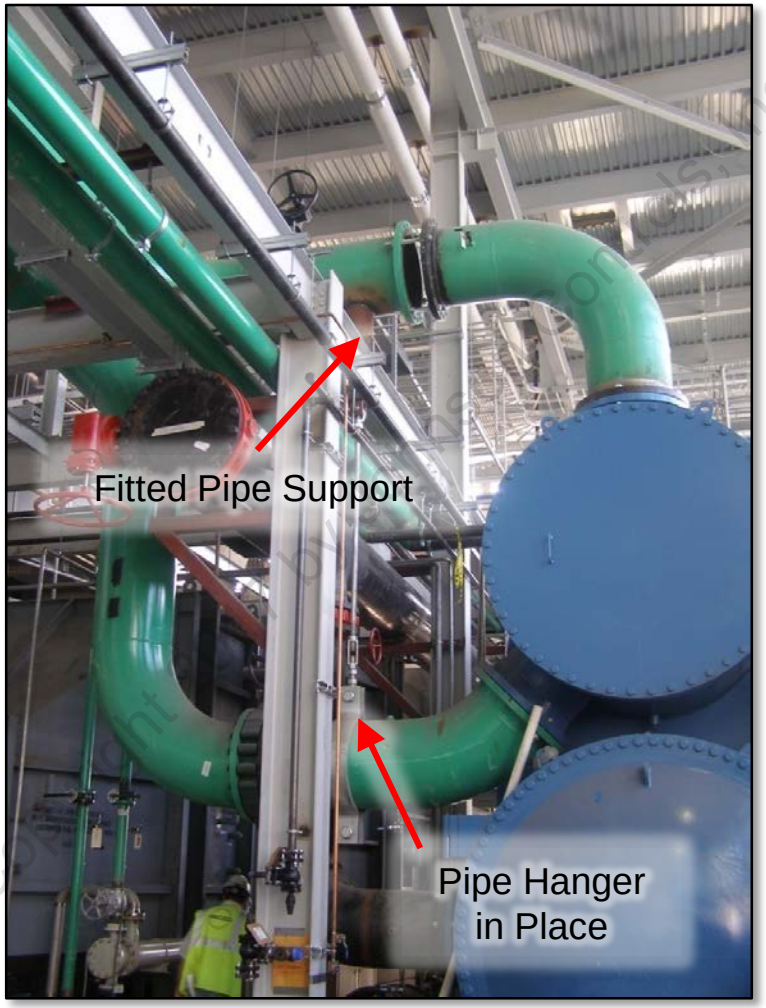

Copyright © 2014 Johnson Controls, Inc

Verifying the Installation—Question

When this flange was tightened up, the top condenser bundle tilted forward. How would you fix this?

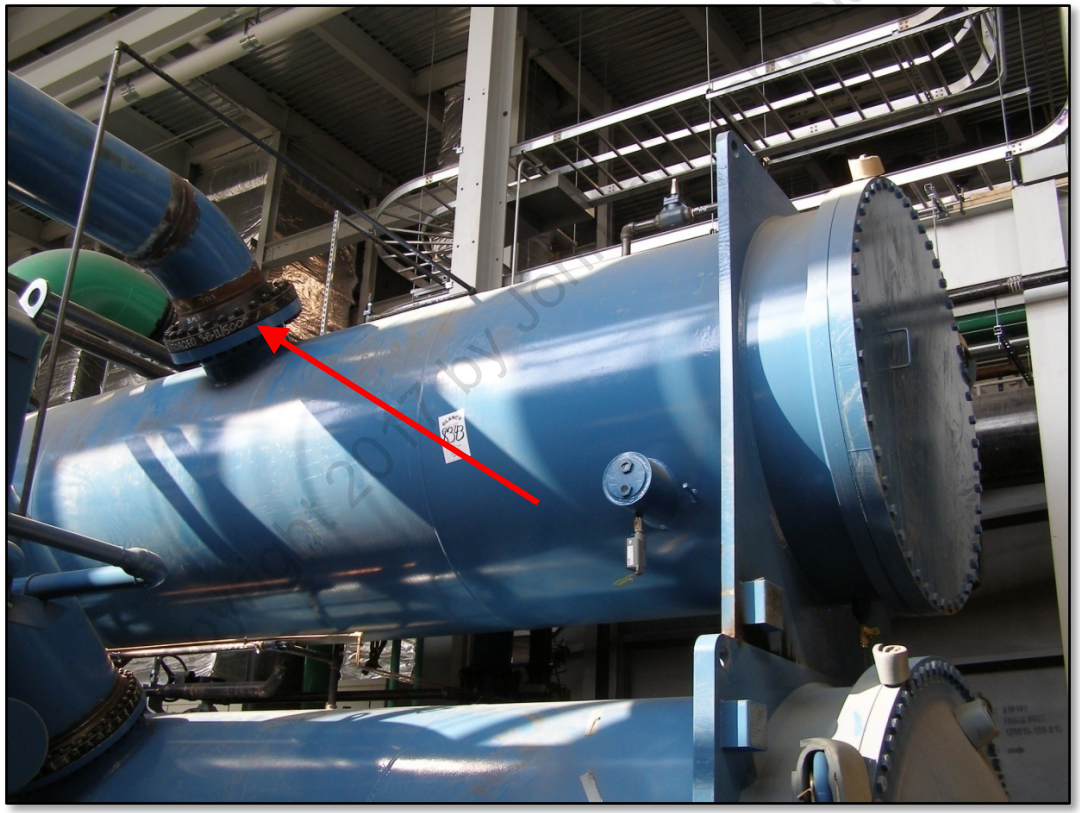



Verifying the Installation—Improper Solution



Copyright 2017 Johnson Controls, Inc.

Required Cold Offset Measurements

ENGLISH = INCHES					
AMBIENT TEMP.	AA	BB	DD	EE	FF
40°F	.005	.031	.005	.003	.016
60°F	.002	.031	.005	.005	.013
80°F	-.001	.031	.005	.006	.010
100°F	-.004	.031	.005	.007	.006
120°F	-.007	.031	.005	.008	.003

METRIC = mm					
AMBIENT TEMP.	AA	BB	DD	EE	FF
0°C	.144	.783	.114	.074	.435
10°C	.080	.784	.114	.100	.363
20°C	.016	.785	.114	.126	.290
30°C	-.049	.786	.114	.151	.218
40°C	-.113	.787	.114	.177	.145

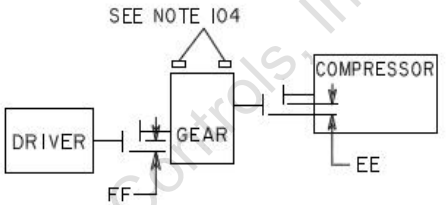

PLAN

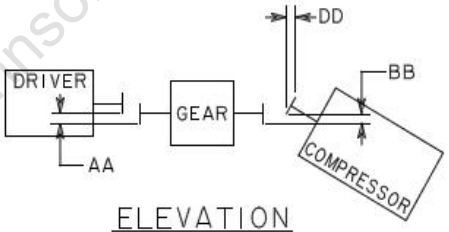

ELEVATION

Copyright 2017 by Johnson Controls, Inc

NOTES:

101. FIGURES ARE DISPLAYED AT 68°F AMBIENT TEMPERATURE.
102. DIAL INDICATOR READING SHOULD BE TWICE SHAFT MISALIGNMENT, EXCEPT TILT.
103. A HOT FINAL ALIGNMENT MUST BE MADE WHILE COMPONENTS ARE NEAR OPERATING TEMPERATURE.
104. FIGURES ARE BASED ON SECURING COMPONENTS WITH HORIZONTAL JACKING SCREWS. MISALIGNMENT MEASURES FROM RIM OF COUPLING HUBS. TOLERANCE +/-.001.

Checking Piping Strain

- Loosen flange bolts of the compressor suction and discharge connections
- Dial indicators should be attached to the compressor drive shaft during checking of pipe strain
- If the flange faces are not parallel or the bolts are not free in their holes, piping strain exists
- Eliminate the piping strain by correcting the suction and discharge connections. (This may mean cutting and re-welding the pipe).
- Ensure that the condenser water piping or the cooler water piping are adequately supported and no piping strain exists
- Tighten compressor suction and discharge connections after eliminating the piping strain

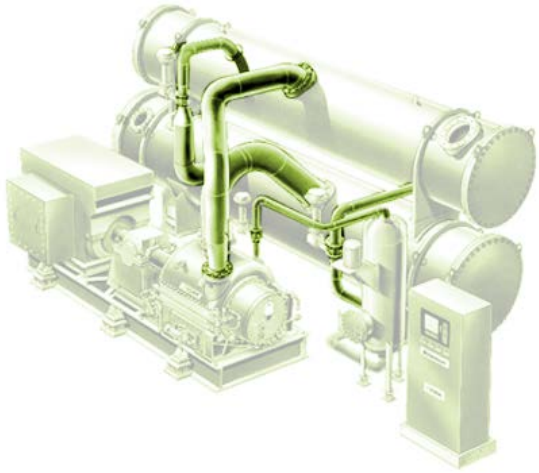

Copyright 2017 by Johnson Controls, Inc

Checking Pipe Strain—Example 1



Checking Pipe Strain—Example 2



©2017 by Johnson Controls

Checking Equipment Dowelling

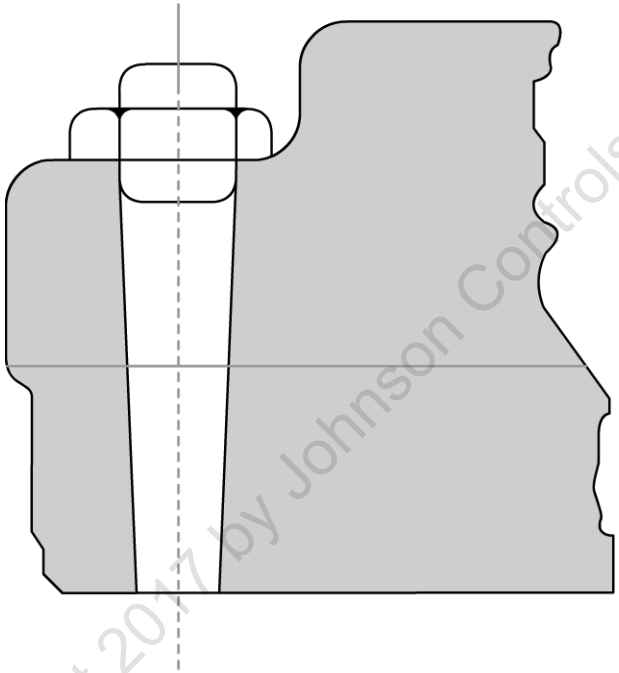

Copyright 2017 by Johnson Controls, Inc

- Check that the equipment dowelling follows specified drawings
- Make hot alignment check and final alignment, if necessary
- Remove dowel pins and finish reaming the holes for full depth seating

Leak Testing

Conduct the following test to ensure that there are no leaks in the system:

Pressure Test

Nitrogen/ Refrigerant Pressure Test



Copyright 2017 by Johnson Controls, Inc

Refrigerant Pressure Test

- Empty a 25 lb. drum of refrigerant in the evacuated unit (vapor only, no liquid).
- Introduce nitrogen through the charging valve and increase the pressure to about 25 psig. Do a quick leak test, looking for any large leaks.
- Use the Halide torch (if allowed) at neutral flame, or an electronic leak detector to test for any possible leaks.
- Test all the joints.

Some polyurethane insulation reacts to Halide. So, before actually testing the insulating unit, test using the Halide torch with the insulation material. Someone spray painting nearby can effect the electronic units.

Electronic detectors are refrigerant-specific.

Note that you cannot use Halide torch with R134a. It only works with a refrigerant containing chlorine.

Copyright 2017 by Johnson Controls, Inc

Nitrogen/Refrigerant Pressure Test

- Manually **open** all actuators on the system.
- Introduce nitrogen slowly and go no higher than 80% of the lowest pressure relief valve. This is mandated.
- Use liquid soap solution to verify all leaks. Remember to check the outlet from the relief valves.
- Mark all the leaks found.
- Release pressure. Fix all the leaks and restart testing.
- If no leaks are detected, hold for an appropriate time. Then, slowly release pressure and prepare the unit for evacuation.
- Continue testing.

Copyright 2017 by Johnson Controls, Inc

Vacuum Test

- Check that all relevant valves open correctly. Ensure all the economizer valves/actuators are also open.
- Connect the Miriam gauge and evacuate the system with a good vacuum pump.
- Stop when it reaches 29.72” Hg vacuum (less than 5 mm of Hg).
- Maintain the unit at 29.72” Hg vacuum for at least 24 hours during which the Miriam gauge should not rise above 5 millimeters for the system to be considered tight.

Copyright 2017 by Johnson Controls, Inc



Vacuum Test—Example

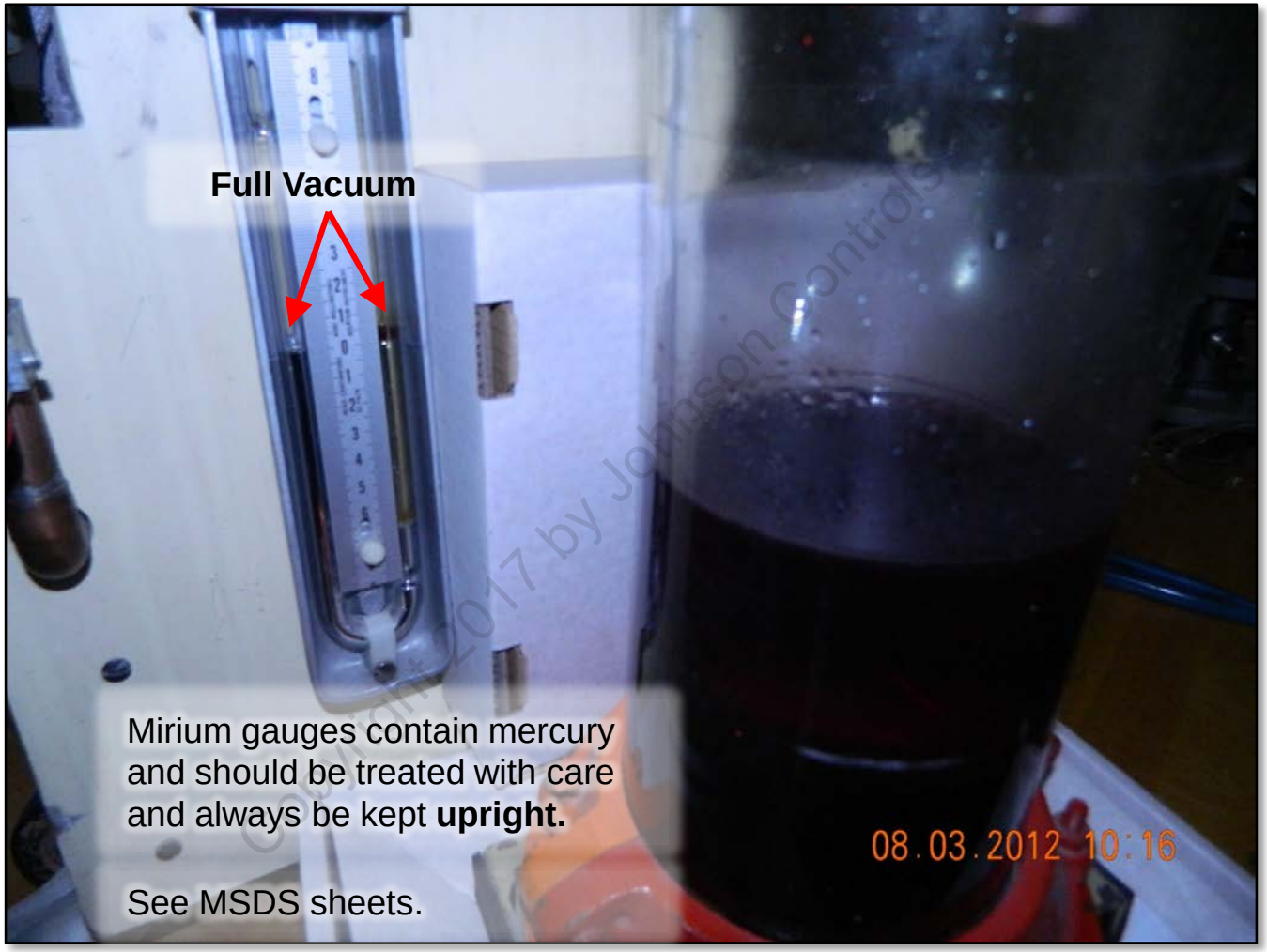

Copyright 2017 by Johnson Controls

Digital Micron Gauge



Copyright 2017 Johnson Controls, Inc

Step 3: Pre-commissioning

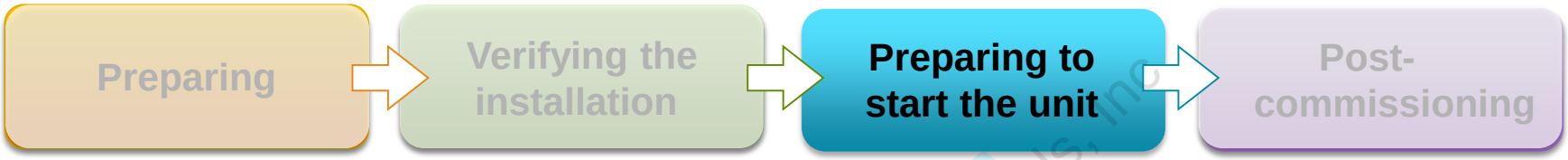

- Pressurize and leak test the complete unit (Johnson Controls Service Procedures)
- Ensure that all electrical, pressure, and temperature probes are functional
- Ensure that all associated systems, for example motor, oil, pumps, etc., are functional
- Inspect the critical components of the chiller
- Evacuate and prove integrity of the complete chiller system (24 hour holding the vacuum below 5000 microns)
- Enable water flows. Check for any leaks on the water system. Rectify if found.
- Start charging the refrigerant with vapor only until unit pressure is above freezing point plus 4 degrees
- Add refrigerant to 80% of charge and add the oil noted on the label information

Copyright 2017 by Johnson Controls, Inc.

Discussion—Pre-commissioning

What critical components of the OM chiller will you inspect prior to startup?

Why? Give reasons.

- Oil systems, and motor and gear box cooling systems
- External water pumping systems and cooling tower controls
- All customer control systems
- Motor coupling is not in place

Copyright 2017 by Johnson Controls, Inc



Inspecting the Chiller Components

Prior to startup, inspect the various chiller components to ensure:

- Electric motors are wired correctly to YORK® Johnson Controls drawings
- Control center is wired and piped as required and has been energized
- Pre-rotation vane linkages should be cleaned, lubricated, exercised, and tested
- All auxiliary equipment is lubricated properly
- Proper rotation of the driver (motor bumping and trial run)
- Compressor shaft rotates freely and in the proper direction
- High speed coupling is assembled as per YORK® Manual



The “Startup Checklist” must be followed at all times and the given order must be followed.



Copyright 2017 by Johnson Controls, Inc.

Inspecting the Chiller Components (Cont'd.)

Prior to startup, inspect the various chiller components to ensure:

- Stabilization of oil pressure on starting the auxiliary oil pump
- Correct operating sequence is followed for running the control center
- Compressor oil heater should be kept hot for 12 hours
- Vanes, HGV and economizer, and subcoolers actuators should be exercised and calibrated according to the checklist
- Correct instructions manual should be followed for operating the capacity control system
- Load limiting control should be calibrated properly
- Ensure that all external systems, water pumps, etc. are functional and start to panel command

Copyright 2017 by Johnson Controls, Inc.

Check Your Understanding—1

The following observations were made when commissioning a compressor. Select the options that need to be fixed to ensure proper commissioning.

- ☐ All motors, gears, and pumps were properly lubricated
- ☐ The compressor shaft moved with some difficulty
- ☐ Circulation of water correctly established; design flows through the condenser, oil coolers, and cooler
- ☐ The auxiliary oil pump was properly initiated
- ☐ The unit was vibrating



Copyright 2017 by Johnson Controls, Inc

Discussion—Starting the Unit

1. Have you come across any leaks while commissioning a unit? If yes, how did you detect it?
2. What in your opinion is the best way of detecting a leak when commissioning a unit?

Copyright 2017 by Johnson Controls, Inc



Charging of Oil

- Use the oil charging pump (YORK® part number 070-10654) to execute this procedure
- Make sure that the unit is shut down when performing this procedure for the first time
- Tighten the connection at the charging valve after the oil has been forced out so lines get oiled and air is restricted from entering the system
- Ensure that the oil level in the compressor oil sump meets the requirements of the label
- Minimize concentration of refrigerant in the oil by powering on the oil heaters as soon as oil charging is complete

The oil charge is usually added when the machine is in the vacuum state. The most important consideration is that no air or other contamination is allowed to enter the unit during this process.



Copyright 2017 by Johnson Controls, Inc

Charging the Refrigerant—Guidelines

- The refrigerant is bought locally as the customer needs to pay shipping charges
- Charge the unit under full load conditions if possible. Otherwise, admit only 80% of the charge during the initial startup.
- Refer to the design specifications for design charge
- When running the chiller, avoid overheating the compressor by monitoring discharge superheat

When running the chiller, carefully check the compressor discharge superheat. Charge more refrigerant if it is excessive even after 80% of the charge has been admitted to the unit. Excessively high discharge superheat may cause overheating of the compressor with high bearing and oil temperature. Low discharge superheat can mean you are lifting liquid into the compressor.



Copyright 2017 by Johnson Controls, Inc.

Charging the Refrigerant—Determining Correct Full Load Charge

- Use only gas from the top of the cylinder to break unit vacuum and raise its pressure
- Do not charge any liquid refrigerant into any OM unit until unit pressure raises higher than that corresponding to 36° F/2.22 ° C
- Gradually attain minimum temperature difference between the cooler and chilled water
- Do not exceed motor overload limitations when approaching full load charge
- Attain the minimum compressor discharge superheat

Copyright 2017 by Johnson Controls, Inc

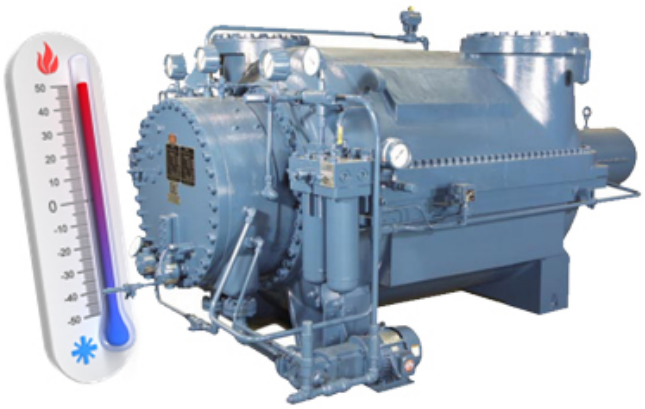

Charging the Refrigerant—Procedure

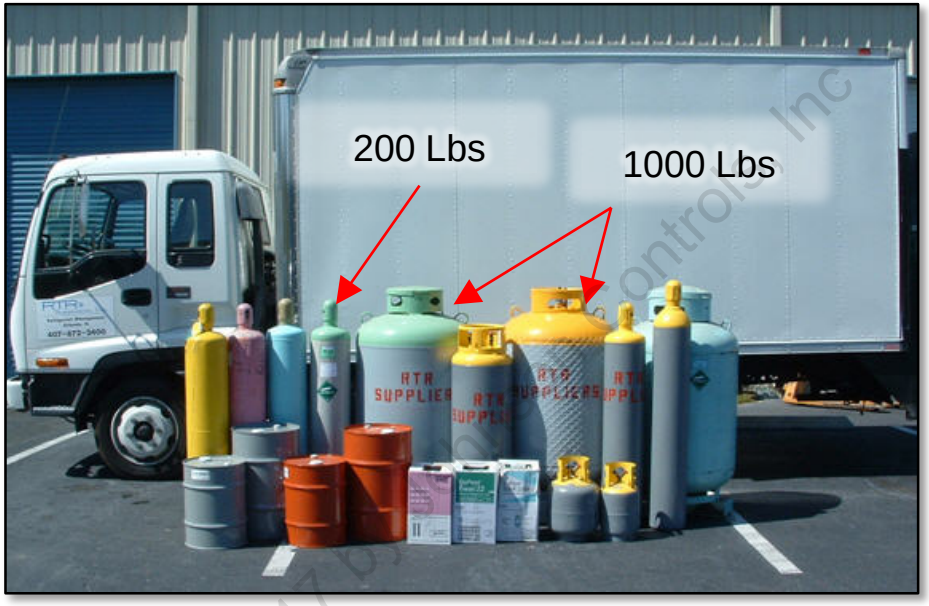

- Charge refrigerant gas only from the top of the cylinder
- Start operating the unit after it is 80% charged
- Throttle the pre-rotation vanes
- Prevent air from entering the unit by purging the charging connection when using cylinders to charge the unit

Copyright 2017 by Johnson Controls, Inc

Trimming the Refrigerant Charge

- Determine the amount of refrigerant added by weighing the refrigerant cylinder while charging (this should be recorded)
- Start the unit and allow the refrigerant to flow in and throttle the charging valve to add small amounts at a time
- Ensure that the cooler pressure does not fall below the point that corresponds to the freezing point of water
- Check the discharge temperature frequently to maintain it below/at design
- Use the sight glasses in the cooler shell to observe the tube wetting action within the cooler

Copyright 2017 by Johnson Controls, Inc



Refrigerant Transfer Unit



Copyright 2017 by Johnson Controls, Inc

Trimming the Refrigerant Charge

- If charging the unit at full load, continue doing so until top row of the cooler tubes is completely wet
- If charging the unit at partial load, do not exceed the calculated full load refrigerant charge
- Avoid exceeding motor overload limitations
- Prevent overcharging of the unit
- **Keep record of when, how much, and why you added/subtracted the refrigerant**

Copyright 2011 by Johnson Controls, Inc



Adding of Oil

Model No.	Oil Gals.
226	10
238	35
255	50



Add oil, as required, to ensure that the oil is at the correct level as per the White Data Label. When the chiller has refrigerant in it, the charging valve is under unit pressure. All safety precautions should be taken when charging the oil.

Copyright 2017 Johnson Controls

Adding of Oil (Cont'd.)

What are the consequences of an inaccurate oil level at the time of initial startup?

- In case of high oil level, the compressor may lose some oil
- In case of insufficient amount of oil, the system may shut down due to oil pressure failure



Copyright 2017 by Johnson Controls, Inc.

Enable Water Flows

- Slowly open the valves below, vent air from the highest point in the system, and check for any leaks. Fix leaks if required.
- Open water cooling valves of all the parts including the compressor, condenser, and speed increaser
- Establish design flows by checking the delta pressure through the condenser, oil coolers, and cooler by circulating water through them, and checking the in and out pressures. These pressures are on the YORK® drawings for the specific machine
- Close all valves after circulating water. If necessary, drain water from the specific component. Check the strainers for occurrence of any foreign materials. Clean the strainer if required.
- Open water valves and again circulate water to establish proper design flows. Vent air from the top of the condenser water box as well as the auxiliary cooling water.

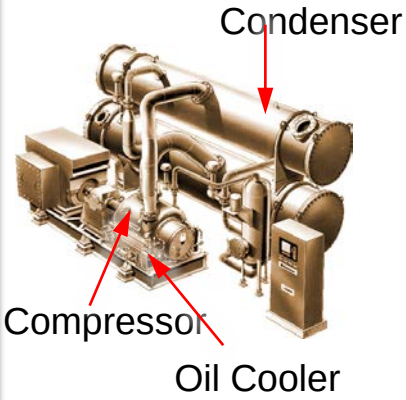

Copyright 2017 by Johnson Controls, Inc

Cooling Water Supply and Return System

Cooling water in for oil and motor cooling. Temps and pressures gauges



Cooling water out. Use the outlet valves to control the delta pressures/flows

Copyright © 2017 Johnson Controls, Inc

Oil Cooler Valves



Copyright © by Johnson Controls, Inc.

Typical Starting Procedure

- Ensure that the correct flow of water flows through the oil cooler
- Move the auxiliary oil pump switch to Automatic
- Allow the Process Logic Control (PLC) to start the compressor
- Observe the Human Machine Interface (HMI) for any deviations in temperatures and pressures
- Stop the compressor if there is any abnormal change in conditions



Some control arrangements can automatically start the compressor after a short delay. This **Remote Start** should be disabled during testing.

Refer to the wiring diagram and the application data sheet.

Copyright 2017 by Johnson Controls, Inc.

Starting the Unit

Compressor **Air Run-in** procedure

- Conduct this procedure when starting the compressor for the first time or after the bearings have been replaced
- Do not exceed the discharge temperature limit of 200 °F/93.33 °C
- Make sure the Auxiliary Oil Pump switch is in the MANUAL position



It is advisable to run the Nitrogen Testing Charge to avoid introducing **moisture** into the machine after leak and pressure testing.

Copyright 2011 by Johnson Controls, Inc

Starting the Unit (Cont'd.)

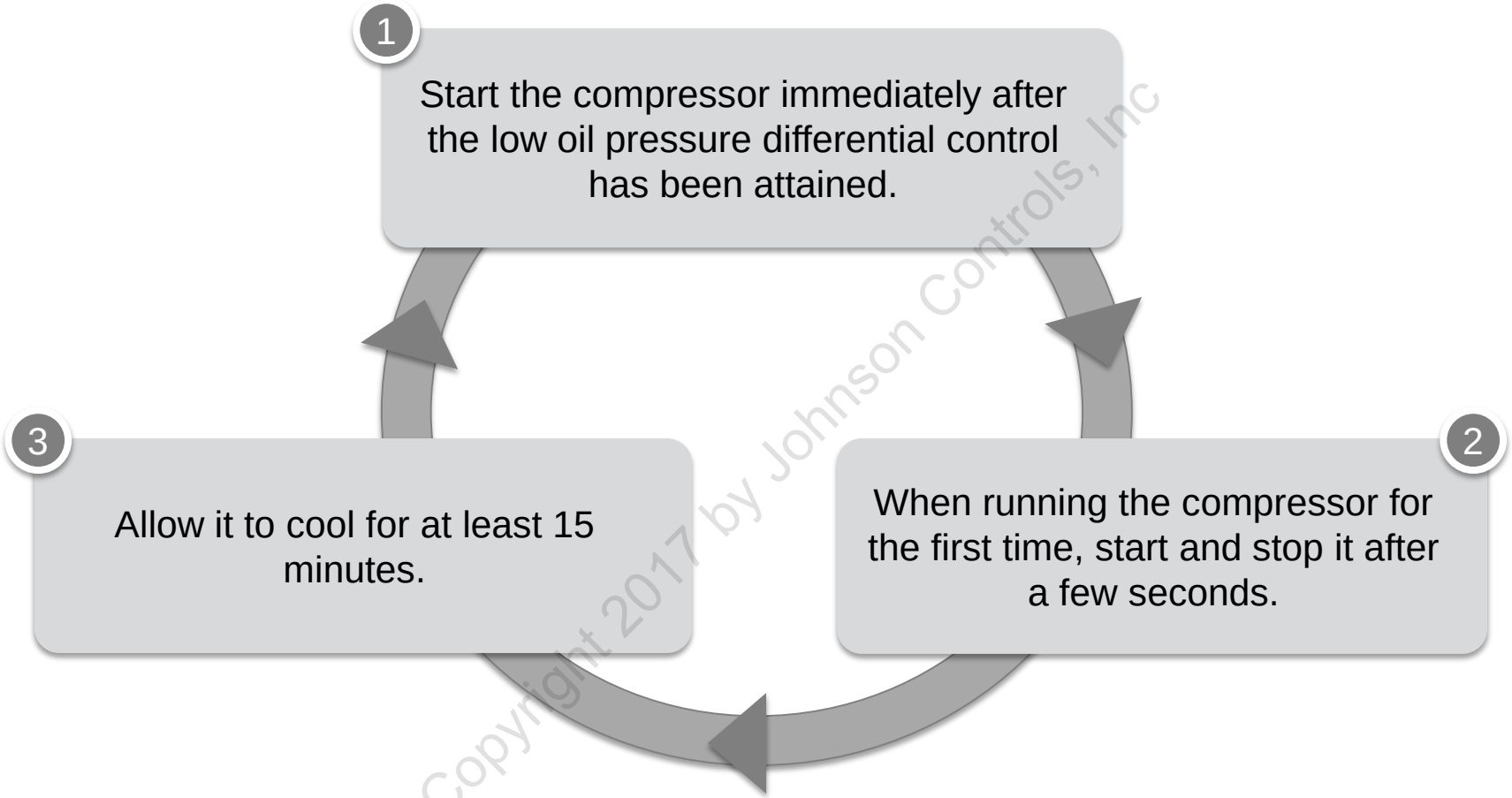

Copyright 2017 by Johnson Controls, Inc

Repeat the start →stop → cool cycle, gradually building up load.

Checking the Mechanical Parts

- Check for any vibrations caused by misalignment or overheating
- Ensure that all mechanical parts are functioning properly
- Make sure that the compressor oiling system furnishes oil properly to the bearings and seals
- Do not throttle the oil coolers
- Open water valves to the oil cooler
- Oil pressure with the auxiliary oil pump running should be 60 psig above the suction pressure
- Manually open the pre-rotation vanes. These should be on AUTO to start, and then transferred to HAND CONTROL when the compressor is running
- Discharge temperature should not rise above a safe temperature
- Change auxiliary oil pump switch to “AUTO” and observe its operation during the shut down

Copyright 2017 by Johnson Controls, Inc.

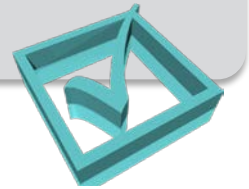

Shutdown After Air Run-in

- Press the STOP button
- Auxiliary oil pump should start automatically when the compressor is shut down
- If required, drain oil from the reservoir and refill with new oil charge
- Shut off all auxiliary motors after the compressor stops completely
- Change the running oil filter after the test run
- Cut open the oil filter and check for any debris

Copyright 2017 by Johnson Controls, Inc

Adjusting the Spring Isolators

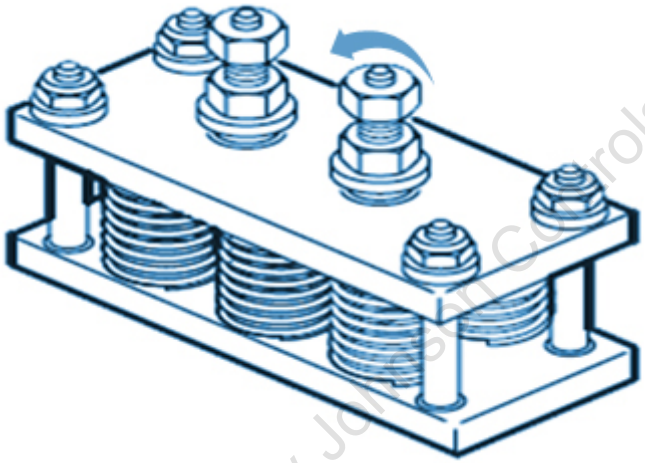

Copyright 2017 by Johnson Controls, Inc

- Bring the unit at operating weight by filling it with water and charging it with the refrigerant
- Turn adjustments bolts in the center of the mountings counter-clockwise until the blocks are free
- Tighten the “snubbers” sufficiently so that the shells do not rise. Check the manuals for this procedure or the information supplied with the springs

Grouting Framework



Copyright 2017 by Johnson Controls, Inc

Finished Grout



Copyright 2013 by Johnson Controls, Inc.

Check Your Understanding—2

Overcharging of the unit during its first startup should be avoided because it causes:

- ☐ Vibration of the unit
- ☐ Misalignment of the unit
- ☐ Increase in the discharge temperature
- ☐ Decrease in the discharge temperature
- ☐ Increase in the motor amperage
- ☐ Decrease in the motor amperage

Copyright 2017 by Johnson Controls, Inc



Adjusting the Capacity Control

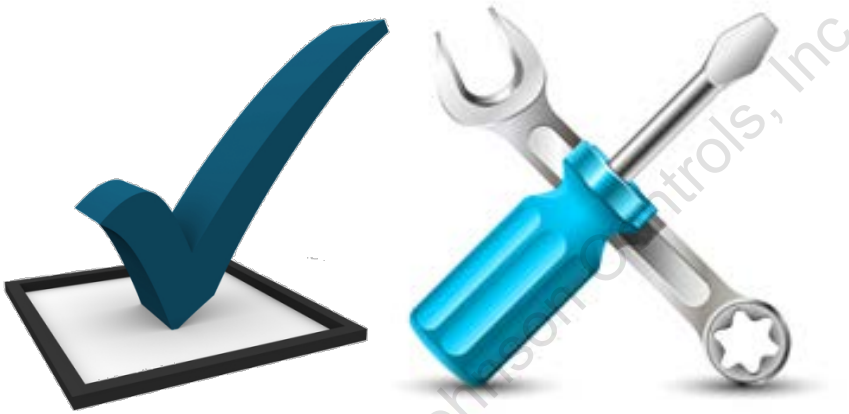

- Verify the settings
- Determine the minimum and maximum condenser pressure and corresponding minimum PRV position
- Adjust the hot gas valve such that it closes completely when the unit is running under normal load conditions. Note that the “Automatic” Capacity controls will open and close the HGV, as needed, to satisfy the safeties programmed.

Copyright 2017 by Johnson Controls, Inc

Calibration of Pressure Transmitter

- Determine the maximum and minimum condensing pressure and the minimum PRV position air for adjusting capacity control
- Calibrate all the controls according to the Operations and Maintenance manual

Copyright 2017 by Johnson Controls, Inc

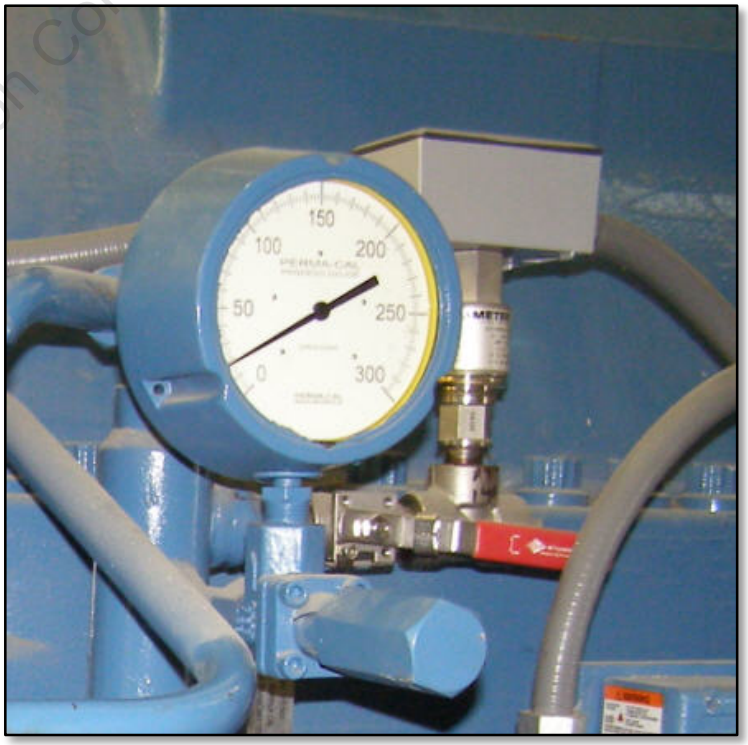

Step 4: Post-commissioning

Preparing → Verifying the installation → Preparing to start the unit → **Post-commissioning**

- Perform operational checks
- Instruct the operators



Copyright 2017 by Johnson Controls, Inc.

Operational Checks



Oil level in compressor



Oil pressure



Water temperature



Water flow to oil cooler, motor, and gear box cooling if fitted



Water flow through evaporator and condenser



Liquid refrigerant temperature to evaporator



Correct operation of level actuators and hot gas valve (HGV)



Control center should show the correct running parameters

Copyright 2017 by Johnson Controls, Inc

Instructions for the Operator

- Give a copy of the Operating Maintenance instruction Form 160.71-01
- Explain each component part and its function
- Describe the refrigerant cycle
- Discuss the compressor lubrication system
- Show each safety and operating control and explain its functions
- Explain the operation of the capacity control system
- Provide details on the preventive maintenance items
- Explain automatic, manual, and extended shutdown mechanisms
- Highlight the importance of water treatment
- Check the operator's knowledge about the unit
- Review the operating and maintenance instructions
- Give contact information of the nearest Johnson Controls/YORK® service department

Copyright 2017 by Johnson Controls, Inc.

The Flying Squad



Any Questions?



Copyright 2017 by Johnson Controls, Inc

Key Takeaways

In this topic, you learned that:

- Preparation for the initial startup should be thorough
- The unit should be started only with the assistance of a YORK® startup engineer. It is usual to have one of the “Flying Squad” team to assist and instruct a large OM startup.
- Use the YORK® initial startup instructions for commissioning the unit
- This startup checklist should be filed in the local Service Office for future reference
- Follow YORK® specifications and guidelines to the letter when starting the compressor for the first time

Copyright 2017 by Johnson Controls, Inc

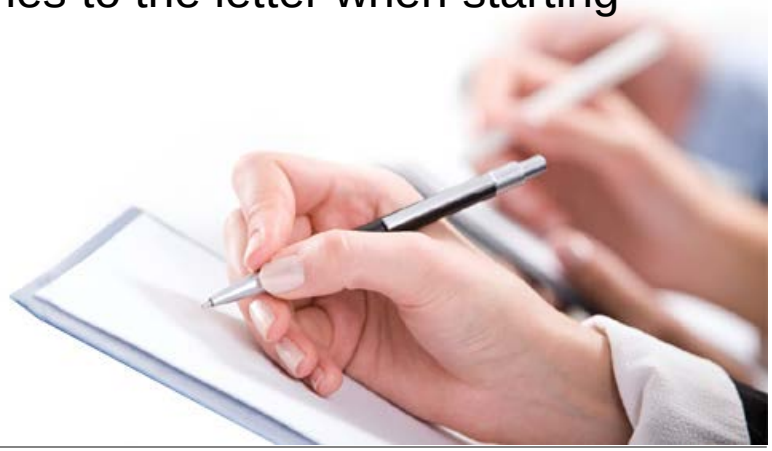

Key Takeaways (Cont'd.)

Preparing

- Schedule a meeting with the customer to determine the pre-startup steps
- Collaborate with different stakeholders
- Familiarize with the system functions and its interface to the site
- Discuss the responsibilities/ schedules

Verifying the installation

- Coupling alignment
- Equipment dowelling
- Piping strain

Preparing to start the unit

- Check mechanical parts
- Test for leaks
- Charge refrigerant
- Adjust spring isolators
- Adjust capacity control
- Calibrate pressure transmitter
- Inspect the critical components of the chiller.
- Add and charge the oil
- Enable water flows

Post-commissioning

- Perform operational checks
- Instruct the operators

Copyright 2017 by Johnson Controls, Inc.

M Compressor_Service Guidelines



Copyright 2017 by Johnson Controls, Inc.

Lesson Objectives

M Compressor Startup

1. Service Guidelines



At the end of this lesson, you will be able to:

- Identify the general guidelines to be followed during the service of the M Compressor

Copyright 2017 by Johnson Controls, Inc

Topic Objectives

M Compressor Startup

1. Service Guidelines



In this topic, we will review the following:

- Preventative maintenance
- Situations in which the compressor should be opened
- Preparing for service
- General service tips

Copyright 2017 by Johnson Controls, Inc

M Compressor Maintenance

(Forms 160.71-O1, 220.11-NM2)

M Compressor's success depends on Operating Engineers, Service Technicians, and maintenance personnel who are responsible for operating and maintaining the system.





Operators need to maintain a daily log of critical readings to detect malfunctions.

Readings should be filed and kept for future reference.

If the data gathered starts to change, use the guide to identify the potential problems.

Copyright 2017 by Johnson Controls, Inc.

Routine Maintenance of Compressor

Visual Inspection

- Check the main oil discharge pressure in and out of the oil filter
- Check the compressor oil level in the oil reservoir and the oil still
- Check the oil level in the atmospheric drain sump
- Ensure that the oil temperature leaving the thrust bearing never exceeds 170° F/76.66° C
- Ensure that the temperature of the oil supplied to the main bearing does not exceed 145° F/62.77° C
- Record the compressor suction and discharge pressures
- Inspect the compressor motor, gear, and coupling. Beware of any rotating parts.

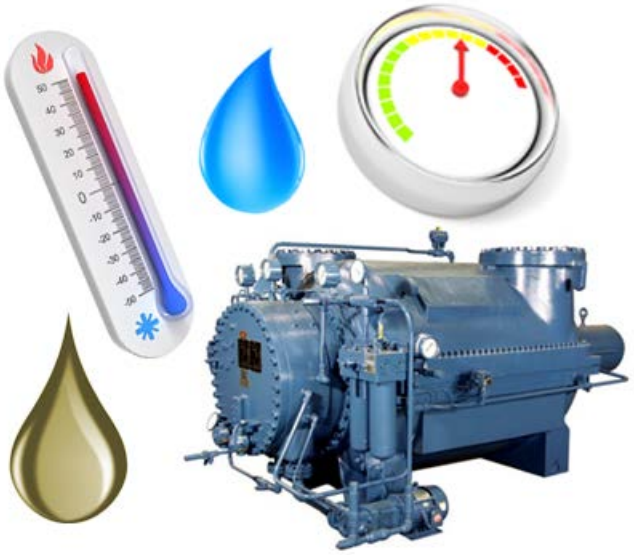

Copyright 2017 by Johnson Controls, Inc

Routine Maintenance of Compressor

Visual Inspection of Machine and Panel Information

- Check the temperature of entering and leaving condenser water
- Check the temperature of the liquid refrigerant leaving the condenser
- Ensure that the water side of tubes in the condenser are clean
- Check the condenser tubes for scale formation
- Check the condenser tubes for corrosion or rusting of the shells
- Check the condenser tubes for slime and algae formation
- Check the condition of the cooling tower water daily



Copyright 2017 by Johnson Controls, Inc

Routine Maintenance: Evaporator

Visual Inspection of Machine and Panel Information

- Check for fouling cooler tubes
- Ensure that the water side of tubes in the evaporator are clean
- Clean the condenser tubes every year or more frequently if you have heat transfer problems
- Clean the evaporator tubes every four years if it is a totally “closed system” with good water treatment
- Conduct the ‘Eddy Current’ testing at five years and then every three years

Copyright 2017 by Johnson Controls, Inc

Blocked Tubes Due to Bad Condenser Water System

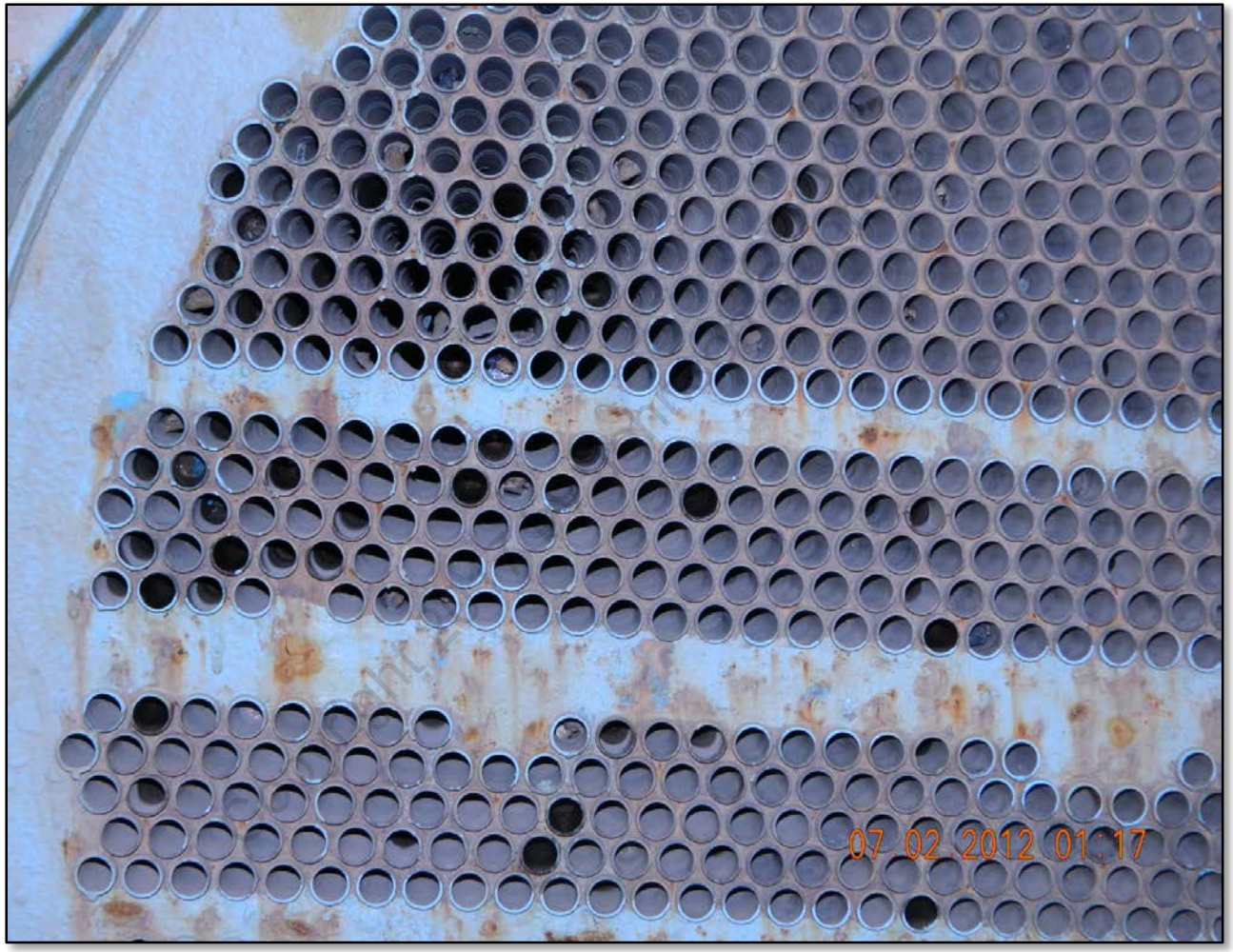

Dirty Condenser Filter

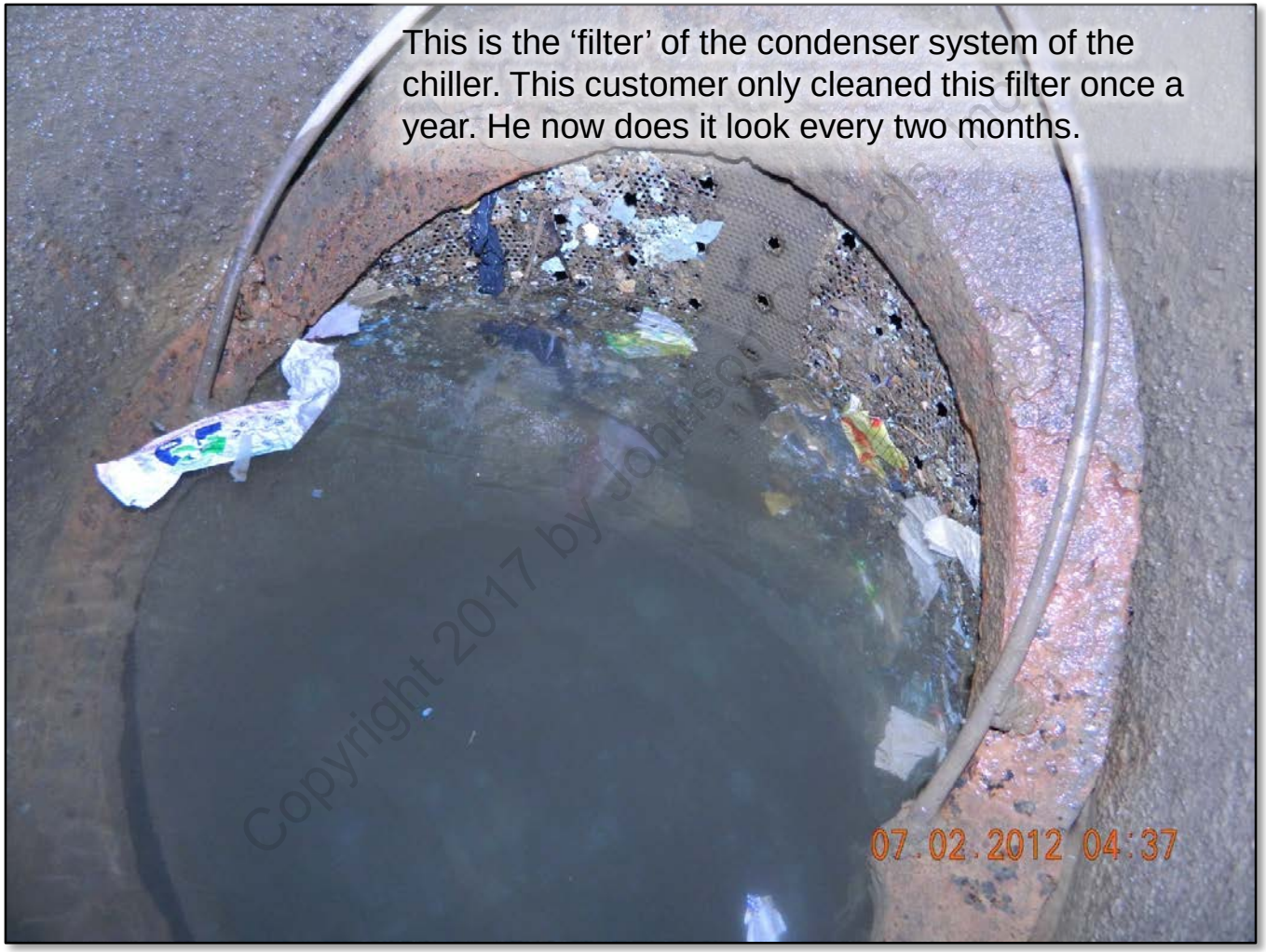

Copyright 2017 by Johnson Controls

Activity: Routine Maintenance Inspections

How often should operators perform the following maintenance activities?

Form 220.11-NM2 - Table 8: Maintenance Requirements for YORK® Multistage Centrifugal Compressors

Procedure	Daily 24 hours	Weekly 160 hours	Monthly 1000 hours	Quarterly 3000 hours	Semi-Annually 3000 hours	Yearly 6000 hours	Every __*__ hours
Check oil level—record any additions/removal							
Check refrigerant charge							
Check an repair leaks^							
Check vibrations levels							
Check alignment/couplings							
Perform analysis on compressor lube oil^							
Replace oil and filters							
Record/evaluate system pressures/temperatures							
Test/calibrate all safety controls^ and gauges							
Sample/analysis refrigerant chemistry							
Replace system filters/driers and clean strainers							
Replace A4 gas filter							
Replace oil return filter							
Clean/drain seal oil trap							
Check/clean oil cooler							
Check relief devices							
Check oil level—record any additions/removal							
Check refrigerant charge							
Check and repair leaks^							
Check vibrations levels							

Copyright 2017 by Johnson Controls, Inc

Discussion: Initial Check of the Compressor

You have been called to a customer site because the M Compressor has shut down. What are the various items you will check as a part of your initial assessment?

Copyright 2017 by Johnson Controls, Inc.



Initial Inspection: Check Logs and Maintenance Charts





Check the maintenance chart for:

- Frequency of oil changes
- Frequency of oil filter element changes
- Cleaning the water side of the oil cooler; should be done every year
- Cleaning air filters in the control circuit; this is usually done by the customer, but should be checked by the technician

Copyright 2017 by Johnson Controls

Initial Inspection: What to Check

- Are there any metal particles in the oil filter element?
- Is the control that caused shutdown within the calibrated ranges?
- What is the air pressure to control the circuit and PRV actuator?



Copyright 2017 by Johnson Controls, Inc

Scenarios When an Internal Inspection is not Required

The following can be checked without removing the compressor shaft:

- Excessive shaft seal leakage of oil or refrigerant
- Oil cooling problems (See picture on the next slide)
- Oil return problems
- Gearbox problems and vibration
- Coupling problems (These are rare, but can happen; see the second picture)

Copyright 2017 by Johnson Controls, Inc

Initial Inspection: Example 1

What do you think is wrong in this picture?



Copyright © Johnson Controls, Inc

Initial Inspection: Example 2

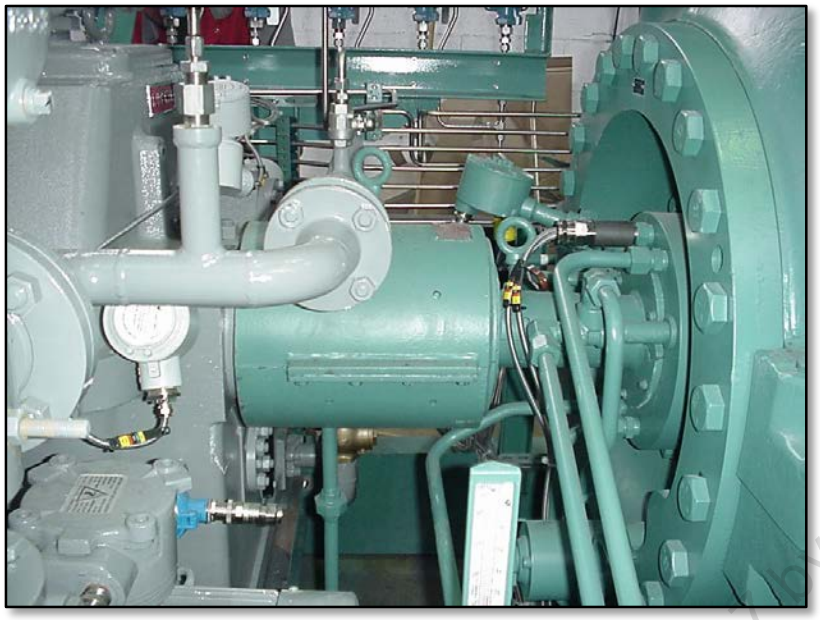

Before the “noise”

Copyright 2017 by Johnson Controls, Inc



As we found it…

Situations Requiring Internal Inspection

Situations in which the compressor does need to be opened:

- Aluminum particles in the oil filter
- Oil loss into the compressor
- Rapid or gradual increase in the compressor vibration
- Excessive balance piston pressure relative to the equalizing stage
- High discharge temperature relative to the suction and side load temperatures

Copyright 2017 by Johnson Controls, Inc

Excessive Shaft Seal Leakage of Oil or Refrigerant



Copyright © by Johnson Controls Inc

Aluminum Particles in the Oil Filter





Why does it happen?

Tiny bits of aluminum are taken away while the machine is running.

What to do?

Drain the oil and inspect the thrust bearing and journal bearings.

Copyright 2017 by Johnson Cont

The thrust oil to the oil cooler is not always filtered. Small amounts of aluminum may be the signs of significant thrust bearing failure.

Oil Loss through the Compressor System



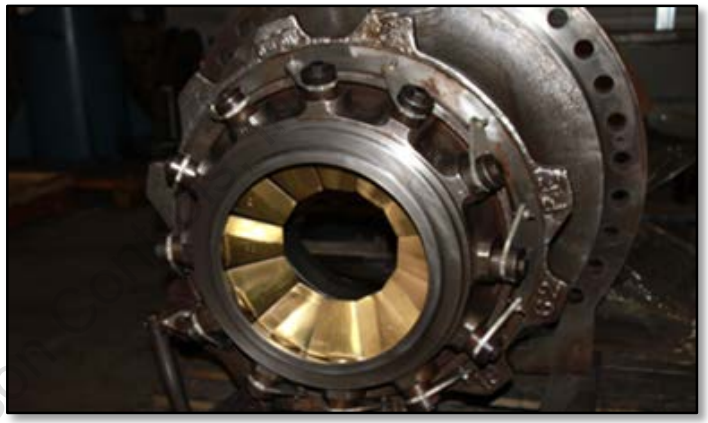

Why does it happen?

- Possible oil logging of the evaporator
- Scoring or wearing of the suction end inboard A-1 oil seal

What to do?

- Ensure the external factors such as oil dilution, sump pressure, and external seal gas pressure seal are correct
- Ensure all troubleshooting has been done
- Remove drive shaft and suction end-bearing housing

Copyright 2017 by Johnson

Rapid or Gradual Increase in Compressor Vibration



Why does it happen?

- Excessive surging
- Poor alignment
- Oil pressure and temperature variations
- Liquid refrigerant entering the compressor suction or side loads
- Displaced oil pump collar
- Unbalanced rotor
- Thrust bearing failure
- Balance piston wear

What to do?

- The top half must be lifted if rotor damage is suspected

Copyright 2017 by Johnson Controls, Inc

Excessive Balance Piston Pressure





Why does it happen?

Excessive pressure (10psi above design) is usually due to a worn balance piston seal ring. This plus a rise in thrust oil temp >25° F of the supply oil temp to bearings indicates the thrust bearing is overloaded

What to do?

The sump must be removed to reach the balance piston and discharge end gas seals. This is a major overhaul and should be a last resort

Copyright 2017 by Johnson

High Discharge Temperature





Why does it happen?

Excessive shaft labyrinth seal and/or impeller inlet seal(s) wear. This will usually be accompanied by a loss in the compressor capacity and possibly a rise in the discharge temperature along with an increase in the compressor horsepower consumption.

What to do?

The compressor top half must be lifted for inspection of the shaft and impeller seals. (Analyze for elevated system temperatures before condemning the compressor efficiency.)

Copyright 2017 by Johnson Controls

Preparing for Service

- Read specific service instructions for the intended task
- Keep proper tools and parts on hand
- Follow the tag out/lockout procedures to prevent an unexpected operation
  - 2 points of safety between you and danger!
- Use extreme caution when rigging the total compressor weight of the top half casing lugs
- Have sufficient guide pins on hand
  - Bullet-nose pins
  - Guide pins
  - All-thread studs



Be sure you know the exact type of refrigerant and oil in the system.



Be careful that the system is not subjected to a freeze condition during the transferring of refrigerant.

Copyright 2017 by Johnson Controls, Inc

General Service Tips

Inspect parts/materials as compressor is disassembled.

- Use containers or packets to segregate bolts, screws, and washers



- Keep a log and true count of all small items



Copyright 2017 by Johnson Controls, Inc

General Service Tips (Cont'd.)

Do not mix parts when removing them from the compressor.

- Clean parts that need inspection thoroughly



Compressor Assembly Log

Axial Alignment Instructions

- Clean and check wearing parts

You may need as-built dimensional drawings of the parts. You may have to contact YORK®, PA for these. You will have to the supply model and serial number of the machine plus the YORK® order number.



Copyright ©2017 by Johnson Controls Inc.

General Service Tips (Cont'd.)

Protect parts and surfaces during repair operations.

- Protect parts and surfaces likely to rust or get scratched
- Plug oil passages likely to accumulate dust
- Coat all parts with oil and cover with paper or plastic for protection from site contamination or dirt
- Place parts in boxes or bins, and label everything. Photograph all damaged parts for the service office. Photos should have day/date feature switched on. This is for legal requirements.

Copyright 2017 by Johnson Controls, Inc

Compressor Tool Kit (See Form 220.11-NM2 page 37)

The wrenches, wrench support, and main shaft wrench are used to remove the compressor drive shaft from the compressor main shaft.



1 Tool Kit



1 Wrench



1 Wrench Support



1 **Small** Snap Ring Pliers



1 **Internal** Snap Ring Plier



1 Main Shaft Wrench



1 **External** Snap Ring Plier

Copyright 2017 by Johnson Controls, Inc

Compressor Tool Kit (Cont'd.)



4 Guide Pins



1 Thread Compound



1 Oil Hand Pump



3 Hex Cap Screws



Sleeves and Mandrels



4 Hex Cap Screws

Copyright 2017 by Johnson Controls, Inc

Any Questions?



Copyright 2017 by Johnson Controls, Inc

Key Takeaways

In this topic, you learned that:

- Operators need logs of critical readings to detect malfunctions
- In the event of a compressor shutdown, maintenance charts need to be checked
- A Service Engineer needs to exhaust all external possibilities before opening the compressor for service
- Problems that a compressor possibly needs to be opened are:
  - Aluminum particles in the oil filter
  - Oil loss into the compressor system
  - Rapid or gradual increase in the compressor vibration
  - Excessive balance piston pressure relative to the equalizing stage
  - High discharge temperature relative to the suction and side load temperatures



Copyright 2017 by Johnson Controls, Inc

Video - Refrigeration Cycle Animation_1980_Part A

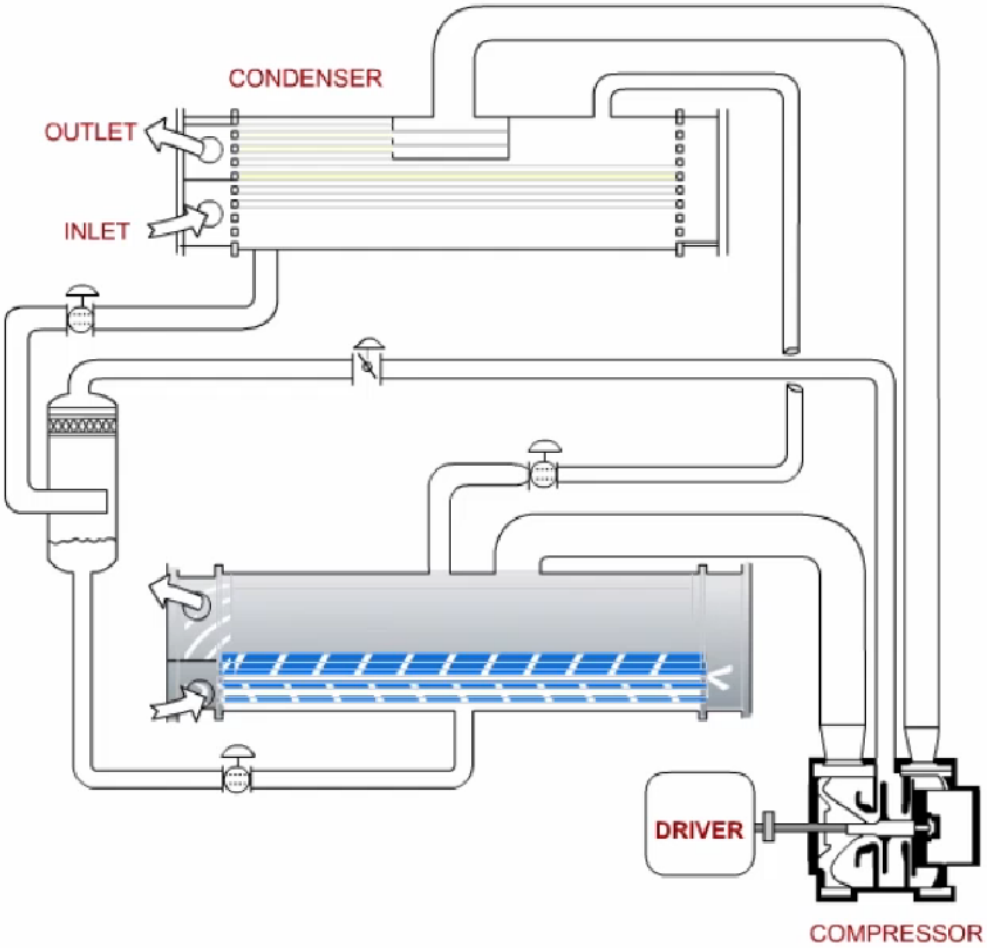

Our Policy prohibits printing. Save GREEN.

Video - Refrigeration Cycle Animation_1980_Part B

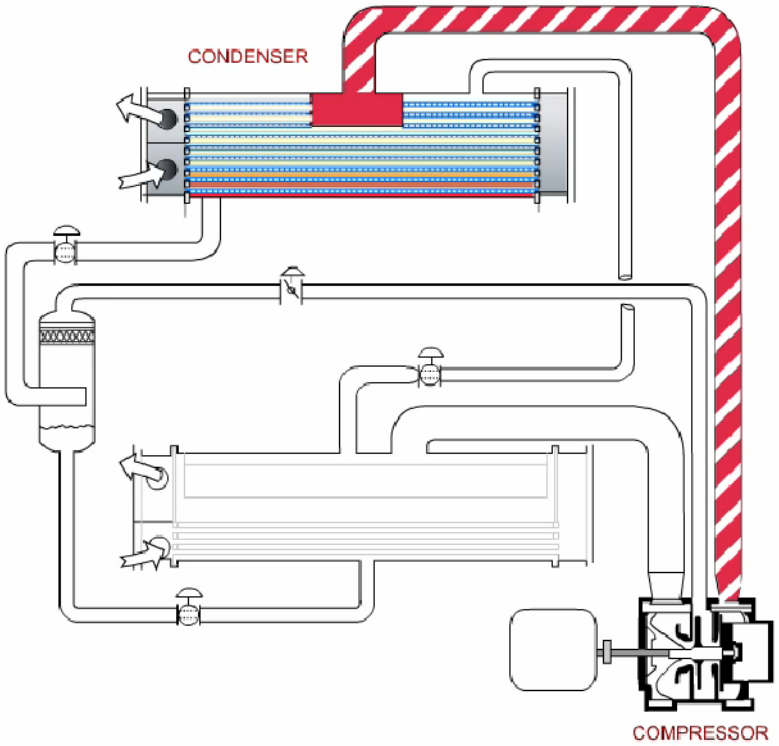

Our Policy prohibits printing. Save GREEN.

Scratch Pad

Copyright 2017 by Johnson Controls, Inc

Scratch Pad

Copyright 2017 by Johnson Controls, Inc

Scratch Pad

Copyright 2017 by Johnson Controls, Inc

Scratch Pad

Copyright 2017 by Johnson Controls, Inc