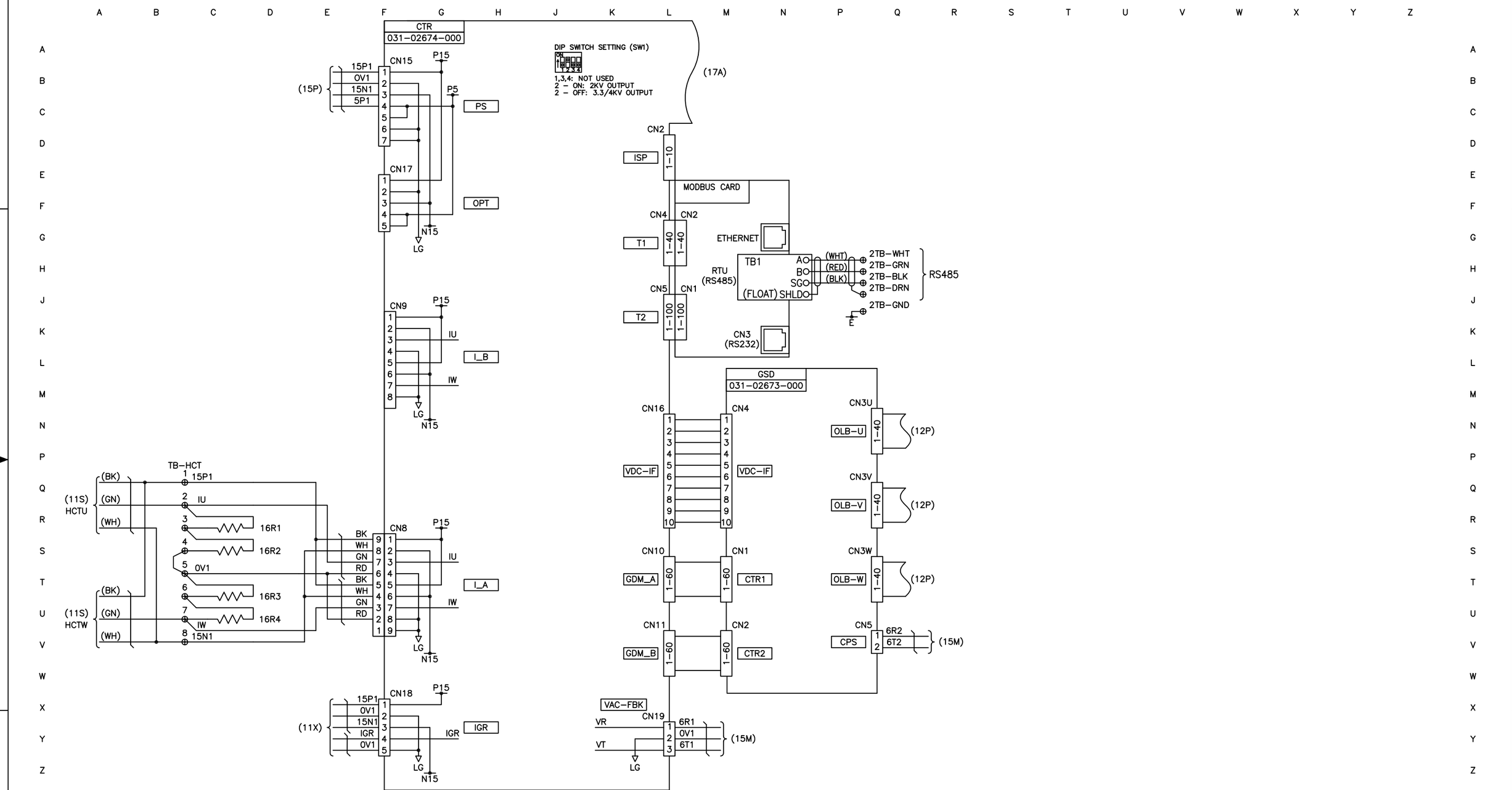

REV. LEV.	DATE	REVISION RECORD	CHG. NO.	DR.	CK.
6					
5					
4					
3					
2					
1	02/15/08	REMOVED 2TB JUMPER & RES		OB	AL
0	07/20/06	FIRST ISSUE		OB	AL

REV. LEV.	DATE	REVISION RECORD	CHG. NO.	DR.	CK.
13					
12					
11					
10					
9					
8					
7					

REV. LEV.	DATE	REVISION RECORD	CHG. NO.	DR.	CK.
20					
19					
18					
17					
16					
15					
14					

"ALL PROPRIETARY RIGHTS IN THE SUBJECT MATTER HEREOF ARE RESERVED, AND NO PERMISSION IS GRANTED TO REPRODUCE THIS PRINT IN WHOLE OR IN PART, OR DISCLOSE ANY OF THE INFORMATION UPON IT TO OTHERS WITHOUT WRITTEN RELEASE BY YORK INTERNATIONAL CORPORATION".

YORK INTERNATIONAL CORPORATION
YORK , PA . 17405

DIMENSIONS ARE IN INCHES
DO NOT SCALE
TOLERANCES PER ENG. STD. M-282
WELDING PER ENG. STD. M-30
REF. DWG.

PCB (1)
INTERCONNECTION

MATERIAL
TYPE ____ ENG. STD. ____
PART NO. ____
CUT SIZE ____

NAME DATE
DR.
APPR.
SCALE:

SIZE: D
CAGE NO
DRAWING NUMBER: 1808JV16
WT. = LBS.
ORIG. NO.
SHEET 9 of 15