CABLE TERMINATIONS			
ENTRY	INCOMING CABLES	MOTOR LEADS	CONTROL WIRE
TOP	I	M	C
BOTTOM	I	M	C
INCOMING TERMINATIONS USE NEMA 4-HOLE PATTERN MOTOR TERMINATIONS USE NEMA 4-HOLE PATTERN			

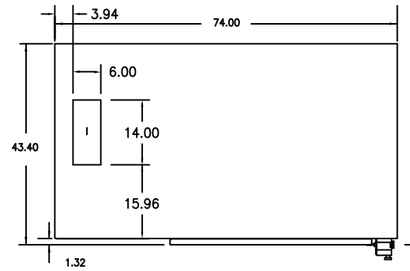

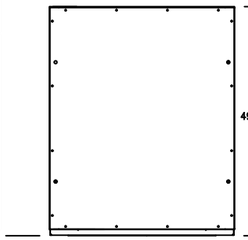

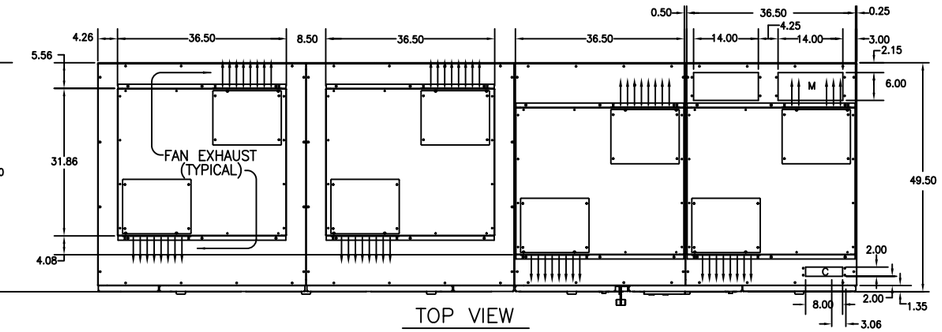

TOP VIEW

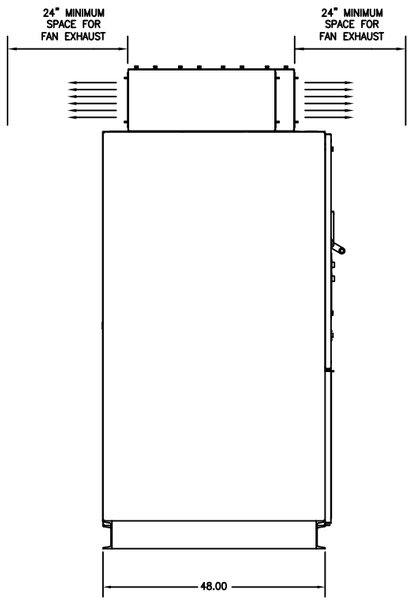

LH VIEW

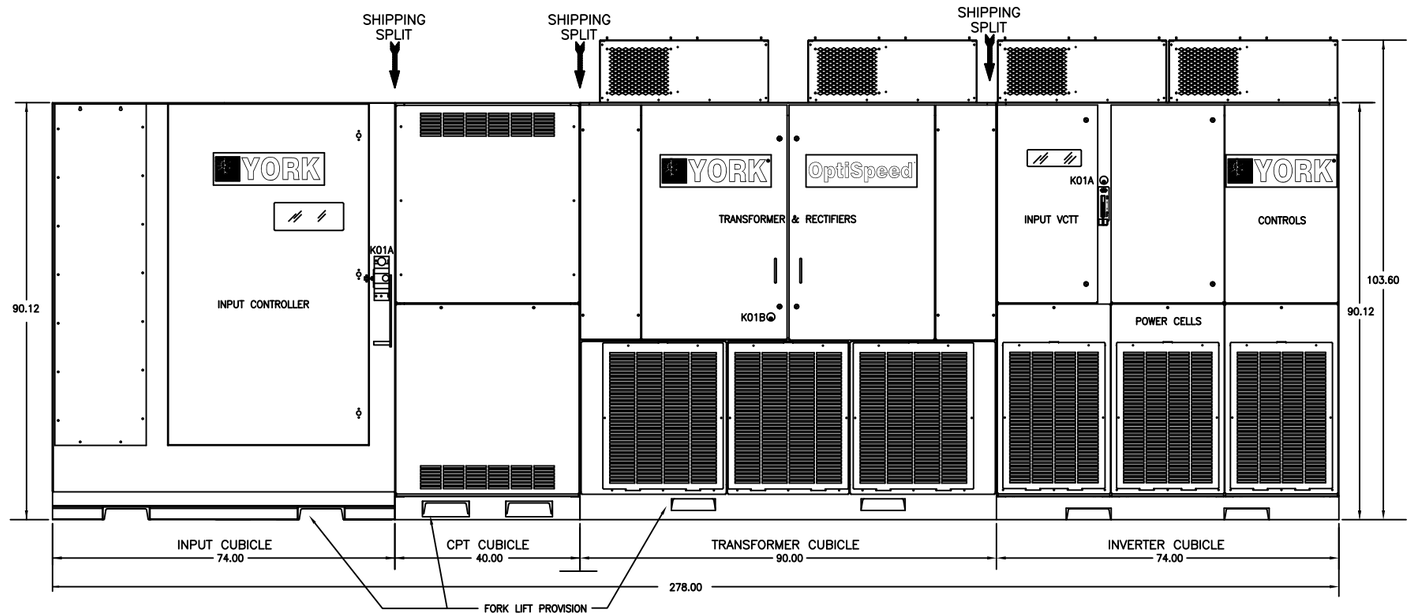

FRONT VIEW

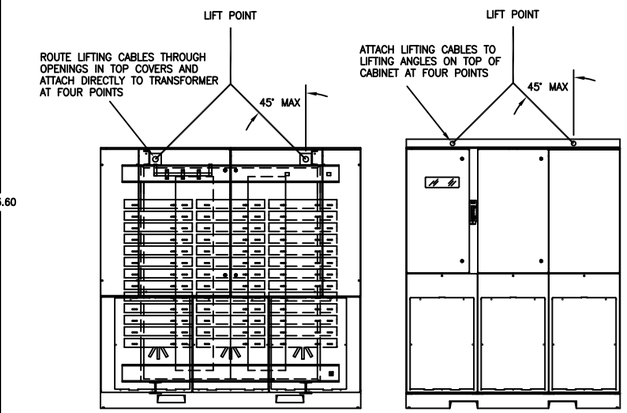

ALTERNATE LIFTING METHOD
TRANSFORMER CUBICLE
(FANS REMOVED)

ALTERNATE LIFTING METHOD
INVERTER CUBICLE
(FANS REMOVED)

NOTES
1. ENCLOSURE TYPE: NEMA 1 W/GASKETED DOORS
2. ALL WEIGHTS ARE APPROXIMATE IN LBS
3. ALL DIMS ARE IN INCHES
4. POWER CELLS NEED TO BE REMOVED FOR ACCESS

	2250HP	2500HP
INPUT CUBICLE	2,500 lbs	2,500 lbs
CPT CUBICLE	1,400 lbs	1,400 lbs
TRANSFORMER CUBICLE	12,300 lbs	13,200 lbs
INVERTER CUBICLE	4,500 lbs	4,500 lbs

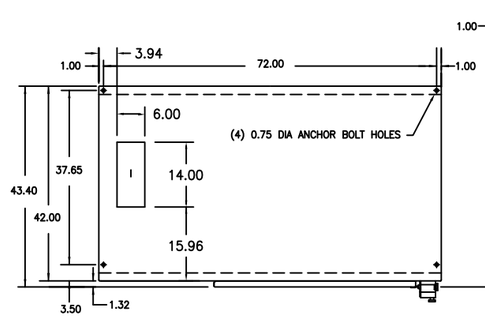

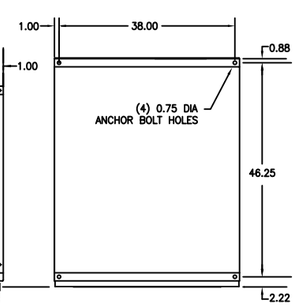

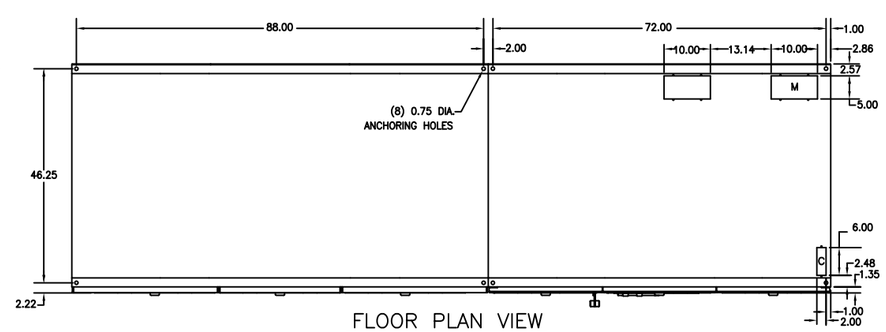

FLOOR PLAN VIEW

YORK INTERNATIONAL CORPORATION
YORK , PA . 17405

REV. LEV.	DATE	REVISION RECORD	CHG. NO.	DR.	CK.	REV. LEV.	DATE	REVISION RECORD	CHG. NO.	DR.	CK.	REV. LEV.	DATE	REVISION RECORD	CHG. NO.	DR.	CK.
6						13						20					
5						12						19					
4						11						18					
3						10						17					
2						9						16					
1						8						15					
0	06/17/09	FIRST ISSUE		OB	AL	7						14					

"ALL PROPRIETARY RIGHTS IN THE SUBJECT MATTER HEREOF ARE RESERVED, AND NO PERMISSION IS GRANTED TO REPRODUCE THIS PRINT IN WHOLE OR IN PART, OR DISCLOSE ANY OF THE INFORMATION UPON IT TO OTHERS WITHOUT WRITTEN RELEASE BY YORK INTERNATIONAL CORPORATION".

DIMENSIONS ARE IN INCHES
DO NOT SCALE
TOLERANCES PER ENG. STD. M-282
WELDING PER ENG. STD. M-30
REF. DWG.

OUTLINE
ENCLOSURE

MATERIAL
TYPE _____ ENG. STD. _____
PART NO. _____
CUT SIZE _____

NAME DATE
DR.
APPR.
SCALE:

SIZE D | CAGE NO | DRAWING NUMBER I808N330

WT. = LBS. | ORIG. NO. | SHEET 15 of 15