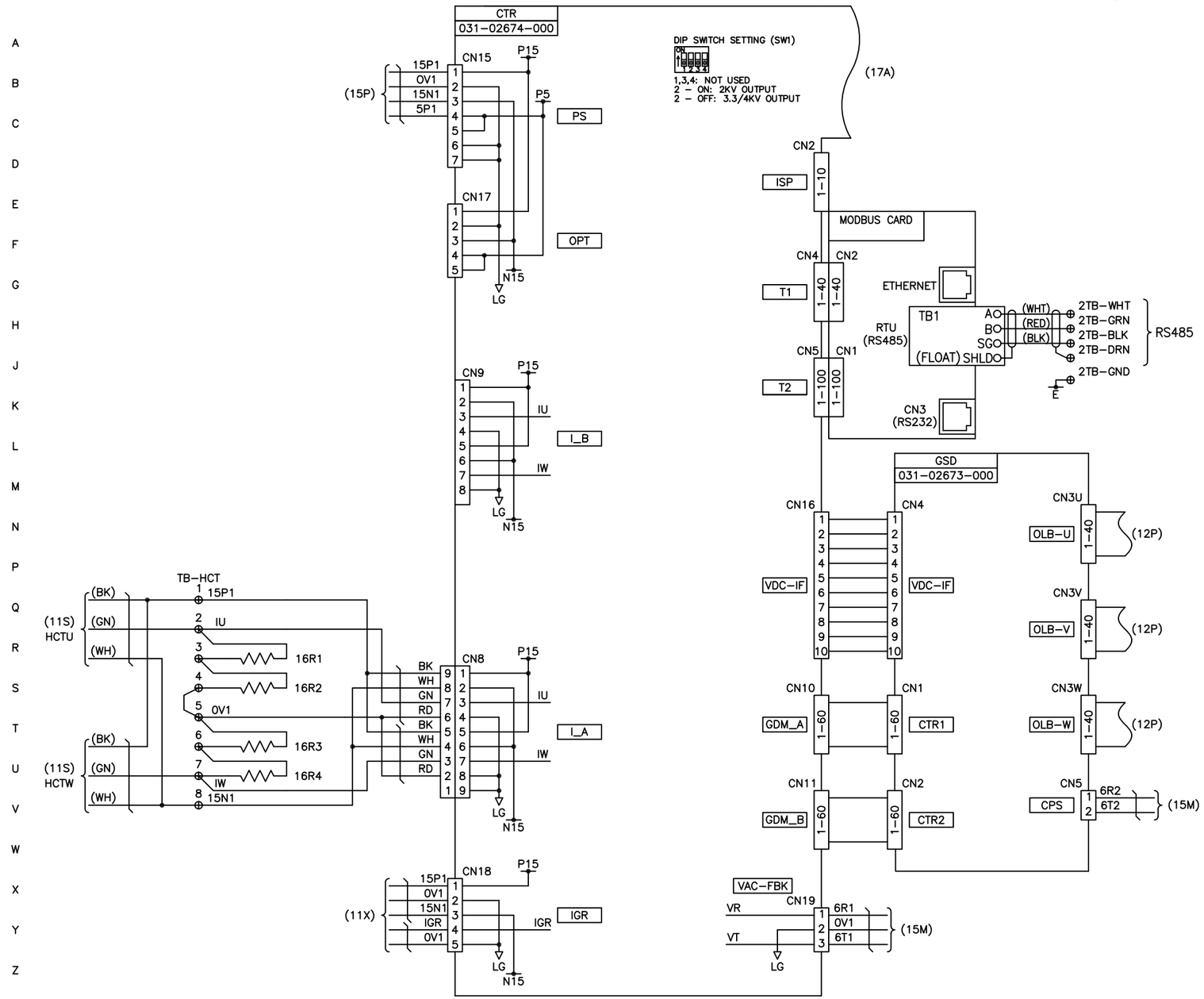

YORK INTERNATIONAL CORPORATION
YORK , PA . 17405

REV. LEV.	DATE	REVISION RECORD	CHG. NO.	DR.	CK.
6					
5					
4					
3					
2					
1					
0	06/17/09	FIRST ISSUE		XZ	AL

REV. LEV.	DATE	REVISION RECORD	CHG. NO.	DR.	CK.
13					
12					
11					
10					
9					
8					
7					

REV. LEV.	DATE	REVISION RECORD	CHG. NO.	DR.	CK.
20					
19					
18					
17					
16					
15					
14					

"ALL PROPRIETARY RIGHTS IN THE SUBJECT MATTER HEREOF ARE RESERVED, AND NO PERMISSION IS GRANTED TO REPRODUCE THIS PRINT IN WHOLE OR IN PART, OR DISCLOSE ANY OF THE INFORMATION UPON IT TO OTHERS WITHOUT WRITTEN RELEASE BY YORK INTERNATIONAL CORPORATION".

DIMENSIONS ARE IN INCHES
DO NOT SCALE
TOLERANCES PER ENG. STD. M-282
WELDING PER ENG. STD. M-30
REF. DWG.

PCB (1)
INTERCONNECTION

MATERIAL
TYPE _____ ENG. STD. _____
PART NO. _____
CUT SIZE _____

NAME DATE
DR.
APPR.
SCALE:

SIZE: D
CAGE NO
DRAWING NUMBER: I808N216
WT. = LBS.
ORIG. NO.
SHEET 9 of 15