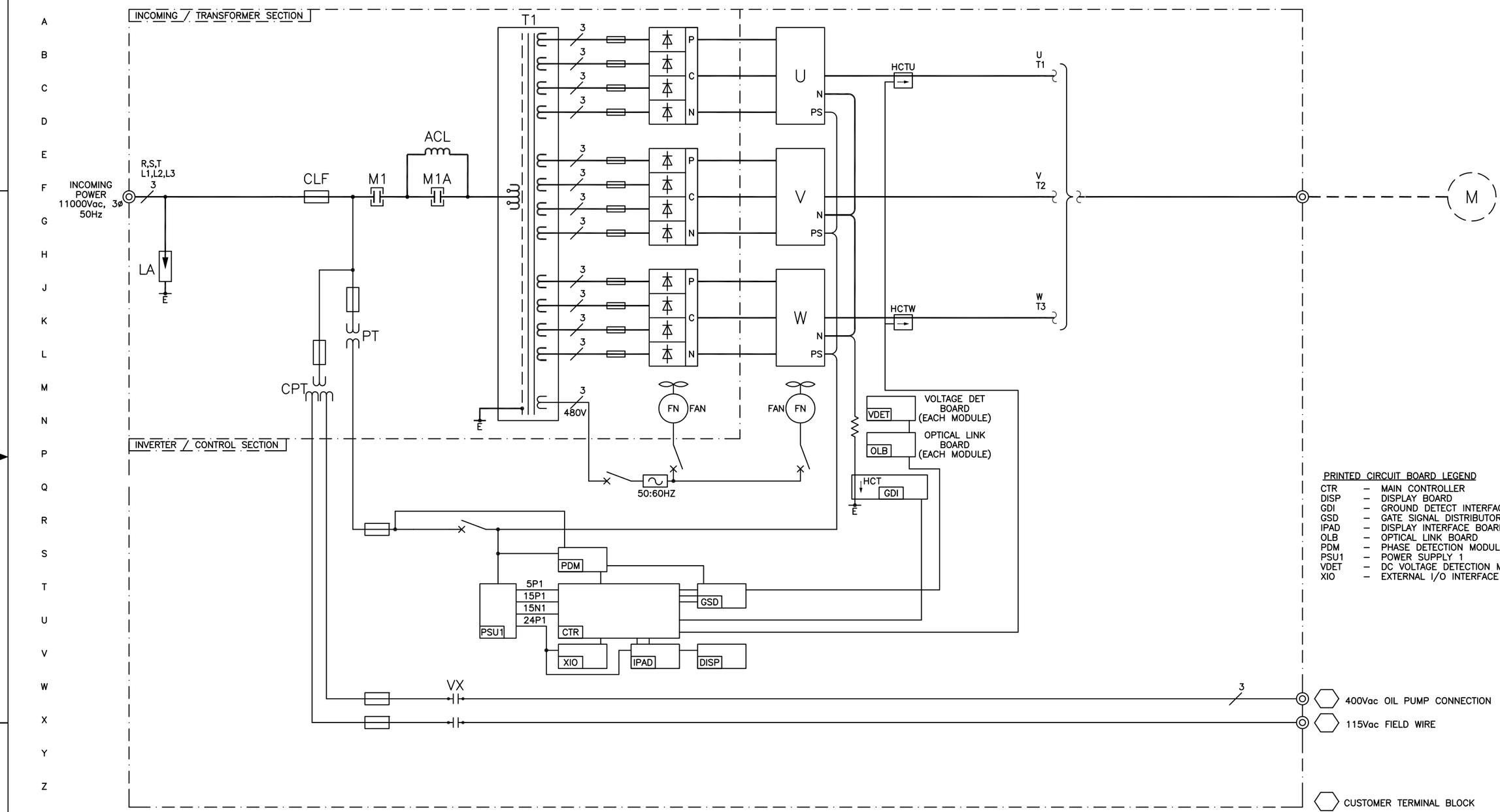

PRINTED CIRCUIT BOARD LEGEND

CTR	–	MAIN CONTROLLER
DISP	–	DISPLAY BOARD
GDI	–	GROUND DETECT INTERFACE BOARD
GSD	–	GATE SIGNAL DISTRIBUTOR
IPAD	–	DISPLAY INTERFACE BOARD
OLB	–	OPTICAL LINK BOARD
PDM	–	PHASE DETECTION MODULE
PSU1	–	POWER SUPPLY 1
VDET	–	DC VOLTAGE DETECTION MODULE
XIO	–	EXTERNAL I/O INTERFACE BOARD

REV. LEV.	DATE	REVISION RECORD	CHG. NO.	DR.	CK.
6					
5					
4					
3					
2					
1					
0	05/07/09	FIRST ISSUE		XZ	AL

REV. LEV.	DATE	REVISION RECORD	CHG. NO.	DR.	CK.
13					
12					
11					
10					
9					
8					
7					

REV. LEV.	DATE	REVISION RECORD	CHG. NO.	DR.	CK.
20					
19					
18					
17					
16					
15					
14					

"ALL PROPRIETARY RIGHTS IN THE SUBJECT MATTER HEREOF ARE RESERVED, AND NO PERMISSION IS GRANTED TO REPRODUCE THIS PRINT IN WHOLE OR IN PART, OR DISCLOSE ANY OF THE INFORMATION UPON IT TO OTHERS WITHOUT WRITTEN RELEASE BY YORK INTERNATIONAL CORPORATION".

YORK INTERNATIONAL CORPORATION
YORK , PA . 17405

DIMENSIONS ARE IN INCHES
DO NOT SCALE
TOLERANCES PER ENG. STD. M-282
WELDING PER ENG. STD. M-30
REF. DWG.

ONE-LINE DIAGRAM

MATERIAL
TYPE _____ ENG. STD. _____
PART NO. _____
CUT SIZE _____

NAME	DATE
DR.	
APPR.	
SCALE:	

SIZE	CAGE NO	DRAWING NUMBER
D		I808MR07

WT. = LBS. ORIG. NO. SHEET 4 of 15