XIO JUMPER SETTINGS			
JUMPER	EXPLANATION	SILKSCREEN	SETTING
JP3	Pulse Generator (PG) power supply level selection.	P15	1–2
	"P15" = +15VDC power supply "P5" = +5VDC power supply	P5	2–3
JP4	Motor temperature sensor type selection. External transducer required when using 100 ohm sensor.	PT	2–3
	"PT" = 1k ohm platinum motor temperature sensor "RTD" = 100 ohm platinum motor temperature sensor	RTD	1–2

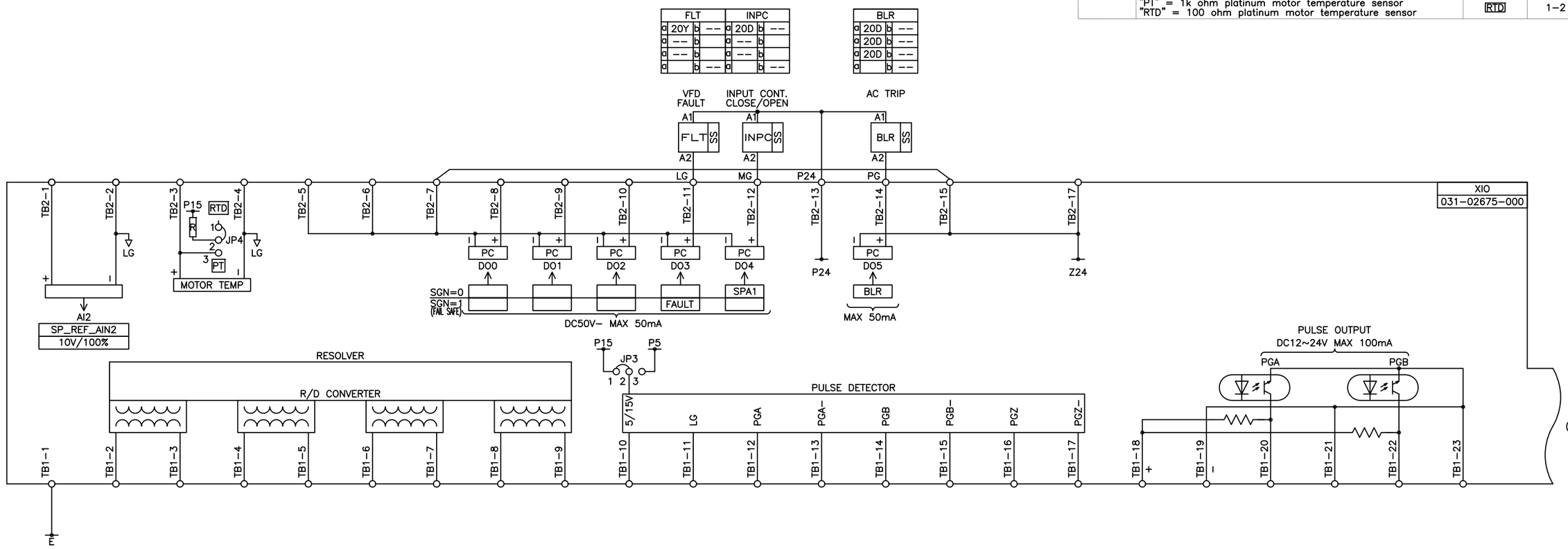

REV. LEV.	DATE	REVISION RECORD	CHG. NO.	DR.	CK.	REV. LEV.	DATE	REVISION RECORD	CHG. NO.	DR.	CK.	REV. LEV.	DATE	REVISION RECORD	CHG. NO.	DR.	CK.
6						13						20					
5						12						19					
4						11						18					
3						10						17					
2						9						16					
1						8						15					
0	06/25/09	FIRST ISSUE		XZ	AL	7						14					

"ALL PROPRIETARY RIGHTS IN THE SUBJECT MATTER HEREOF ARE RESERVED, AND NO PERMISSION IS GRANTED TO REPRODUCE THIS PRINT IN WHOLE OR IN PART, OR DISCLOSE ANY OF THE INFORMATION UPON IT TO OTHERS WITHOUT WRITTEN RELEASE BY YORK INTERNATIONAL CORPORATION".

YORK INTERNATIONAL CORPORATION
YORK , PA . 17405

DIMENSIONS ARE IN INCHES
DO NOT SCALE
TOLERANCES PER ENG. STD. M-282
WELDING PER ENG. STD. M-30
REF. DWG.

EXTERNAL I/O (1)

MATERIAL
TYPE _____ ENG. STD. ____
PART NO. _____
CUT SIZE _____

NAME DATE
DR.
APPR.
SCALE:

SIZE D | CAGE NO | DRAWING NUMBER 1808N518

WT. = LBS. | ORIG. NO. | SHEET 11 of 15