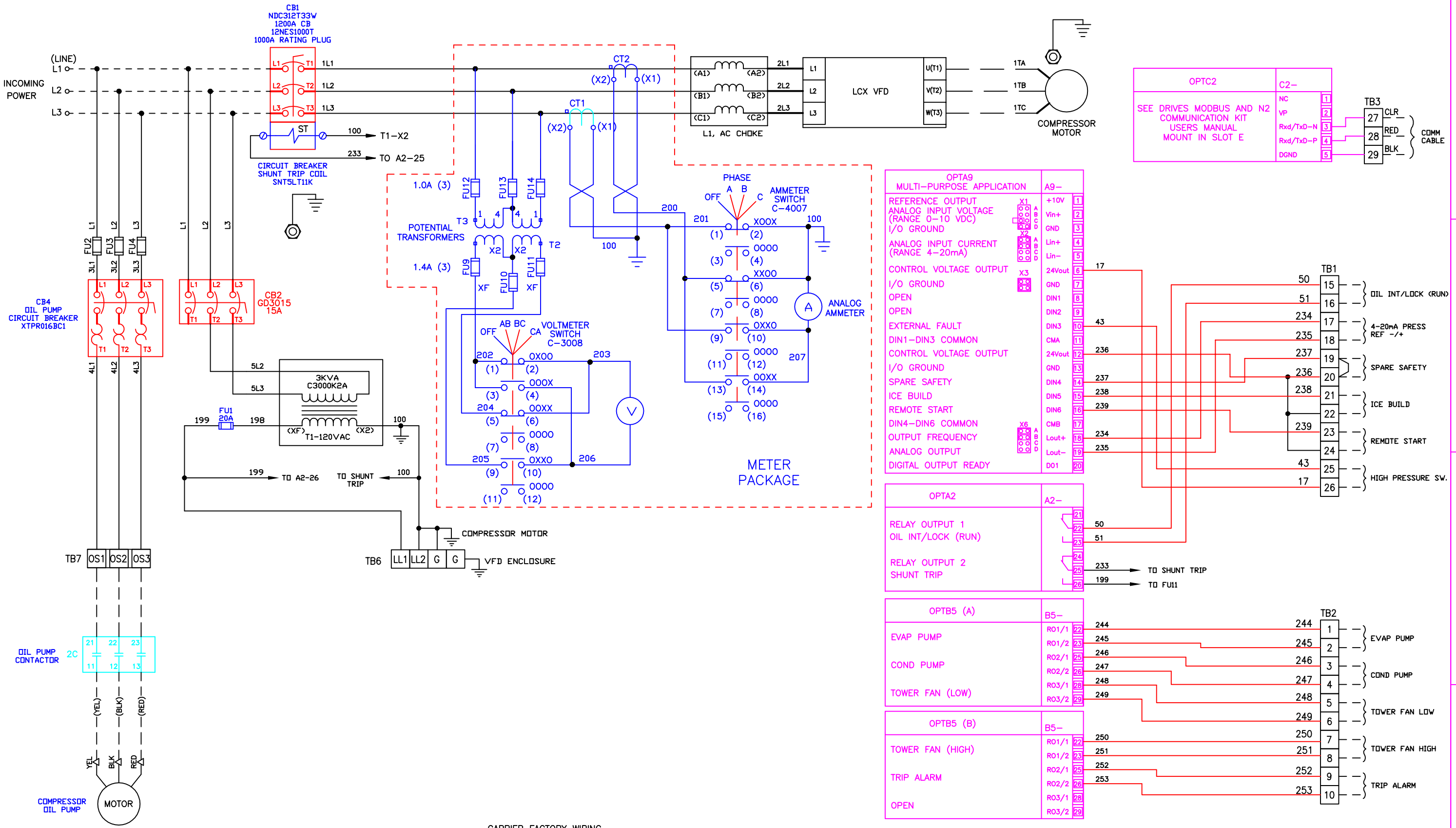


ADDED MISSING WIRE DESIGNATIONS 4-20-10, KC

THE INFORMATION ON THIS DRAWING IS THE PROPERTY OF EATON/CUTLER-HAMMER INC., IS DISCLOSED IN CONFIDENCE AND IS NOT TO BE REPRODUCED, USED OR DISCLOSED EXCEPT FOR THE PURPOSE FOR WHICH FURNISHED.

| | | | |
|---|---|---|---|
| DR BZ | DATE 07/07/09 | EATON \| Cutler-Hammer | |
| CKD | DATE | TITLE COMM VERSION FOR CARRIER | |
| APPD | DATE | PRODUCT LCX9000 | DWG TYPE CONTROL SCHEMATIC |
| THIRD ANGLE PROJECTION | FILE TYPE AutoCAD | .DWG FILENAME 202-009004 | DWG. SIZE B |
| ECO NUMBER 15834 | REVISION 04 | G.O. NUMBER | DWG NO. 202-009004-0002 |
| SHEET 1 OF 1 | | | |

AFDRIVES_B.DWG REV. 07/03