VALVE LOCATION DIAGRAMS

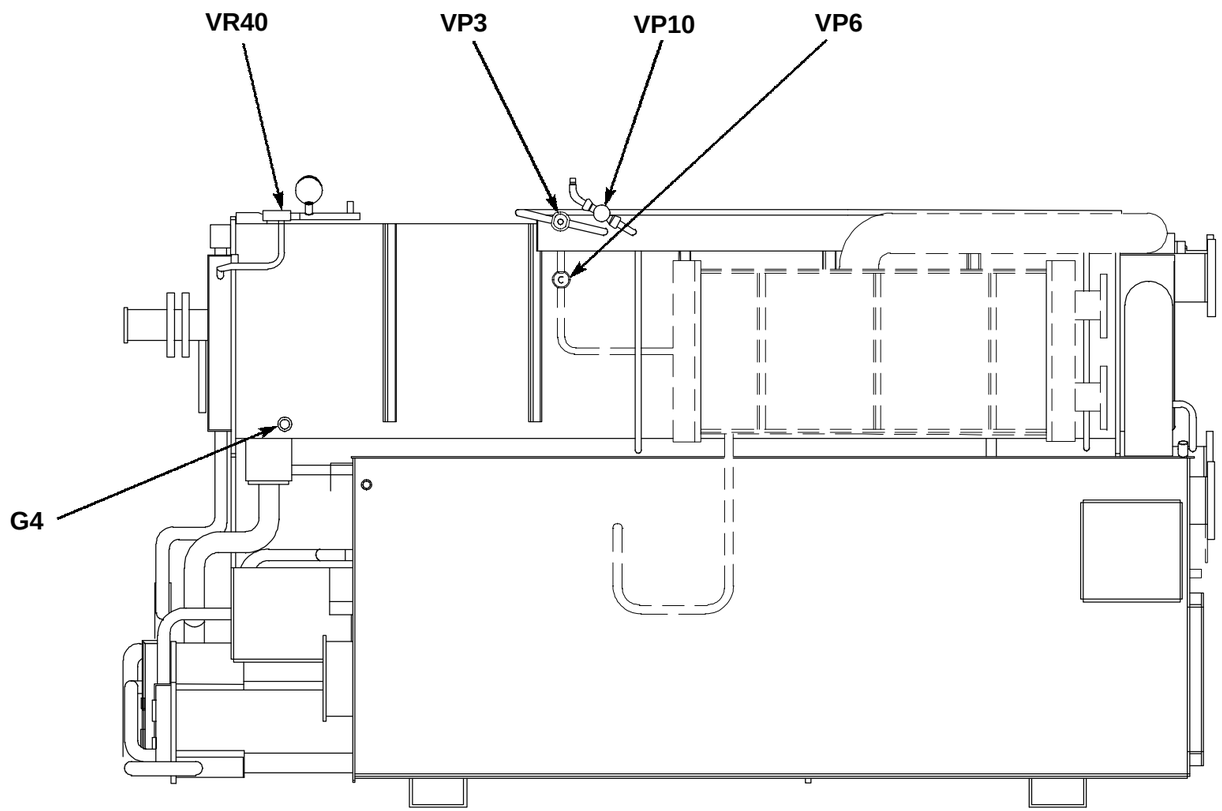

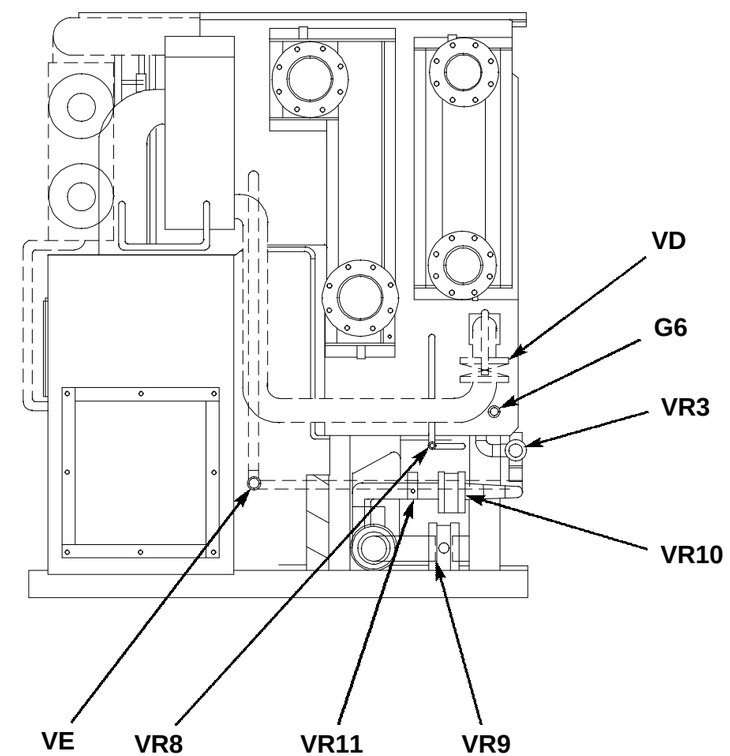

VALVE LOCATION DIAGRAMS

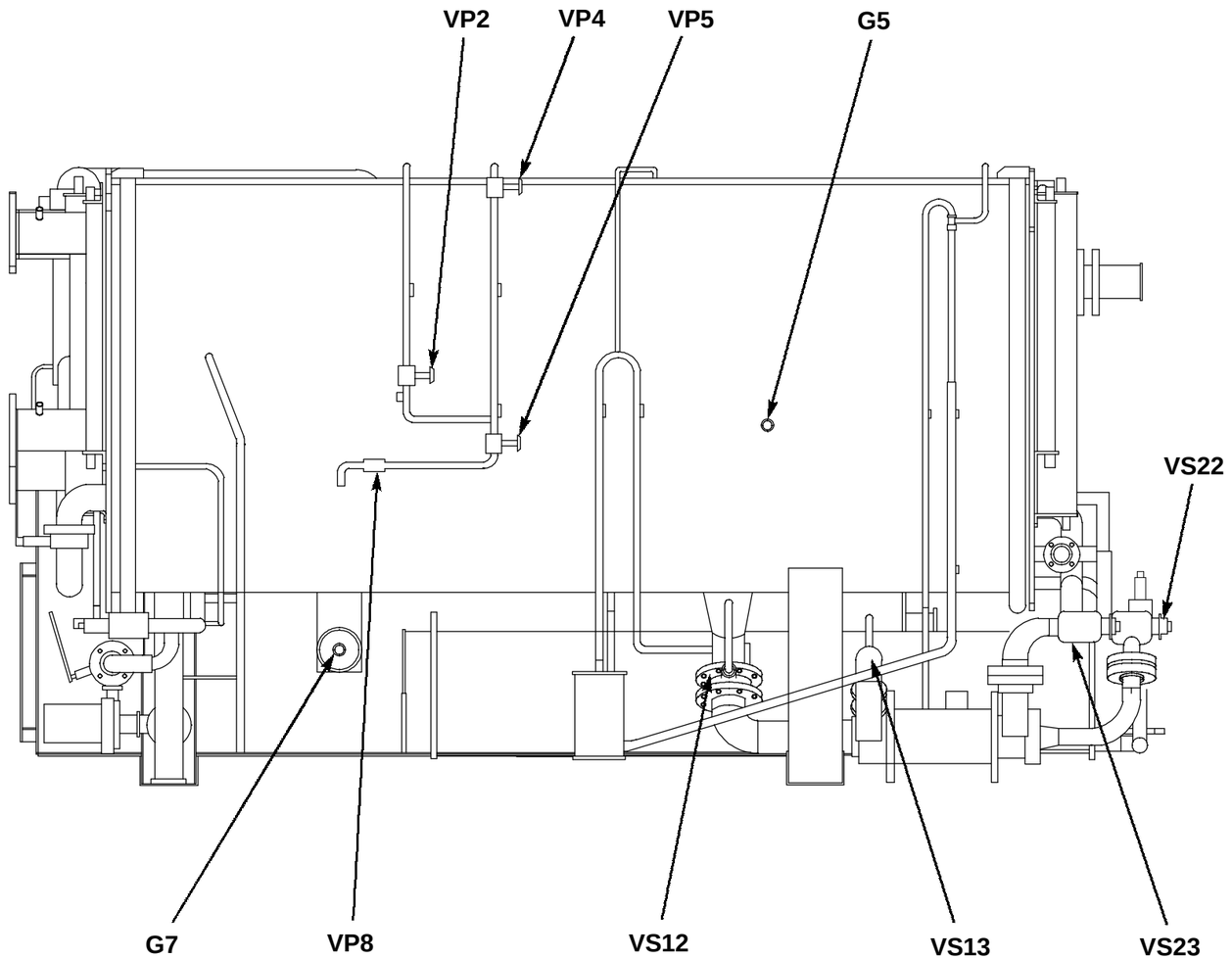

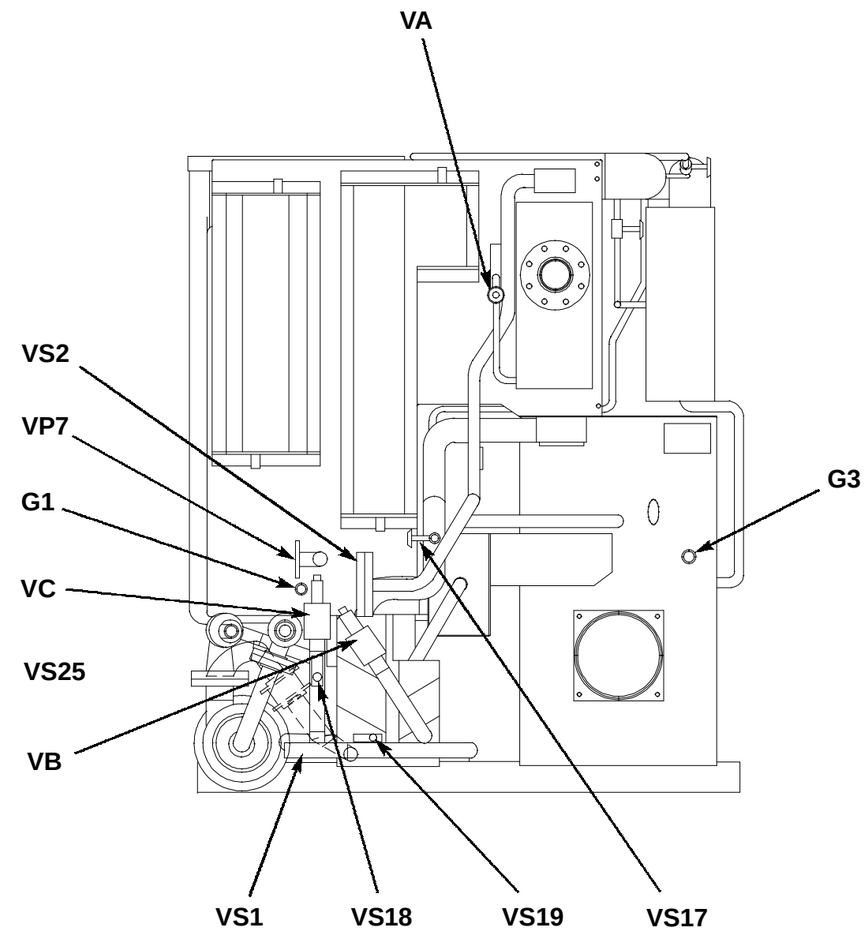

VALVE LOCATION DIAGRAMS

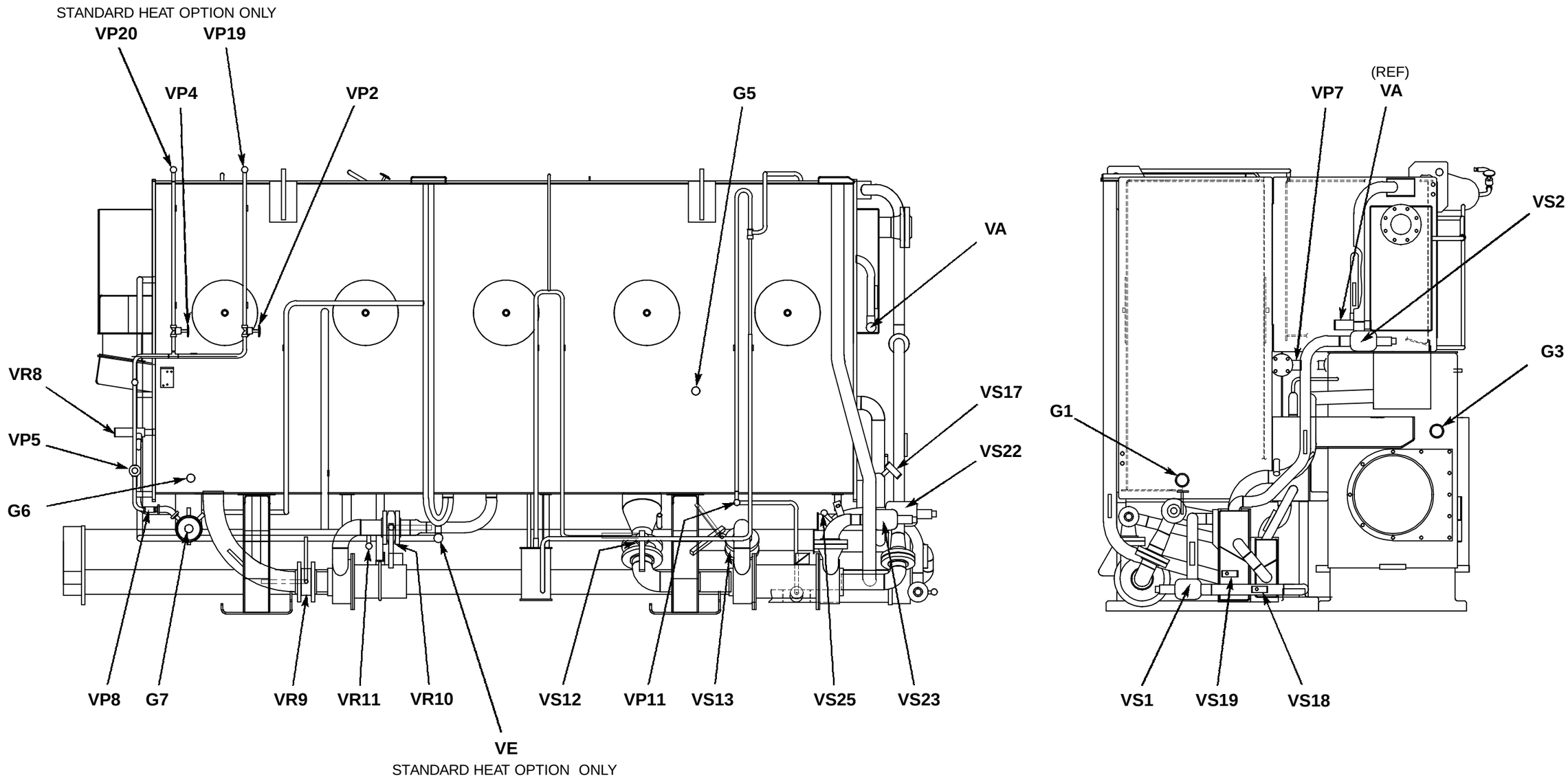

VALVE LOCATION DIAGRAMS

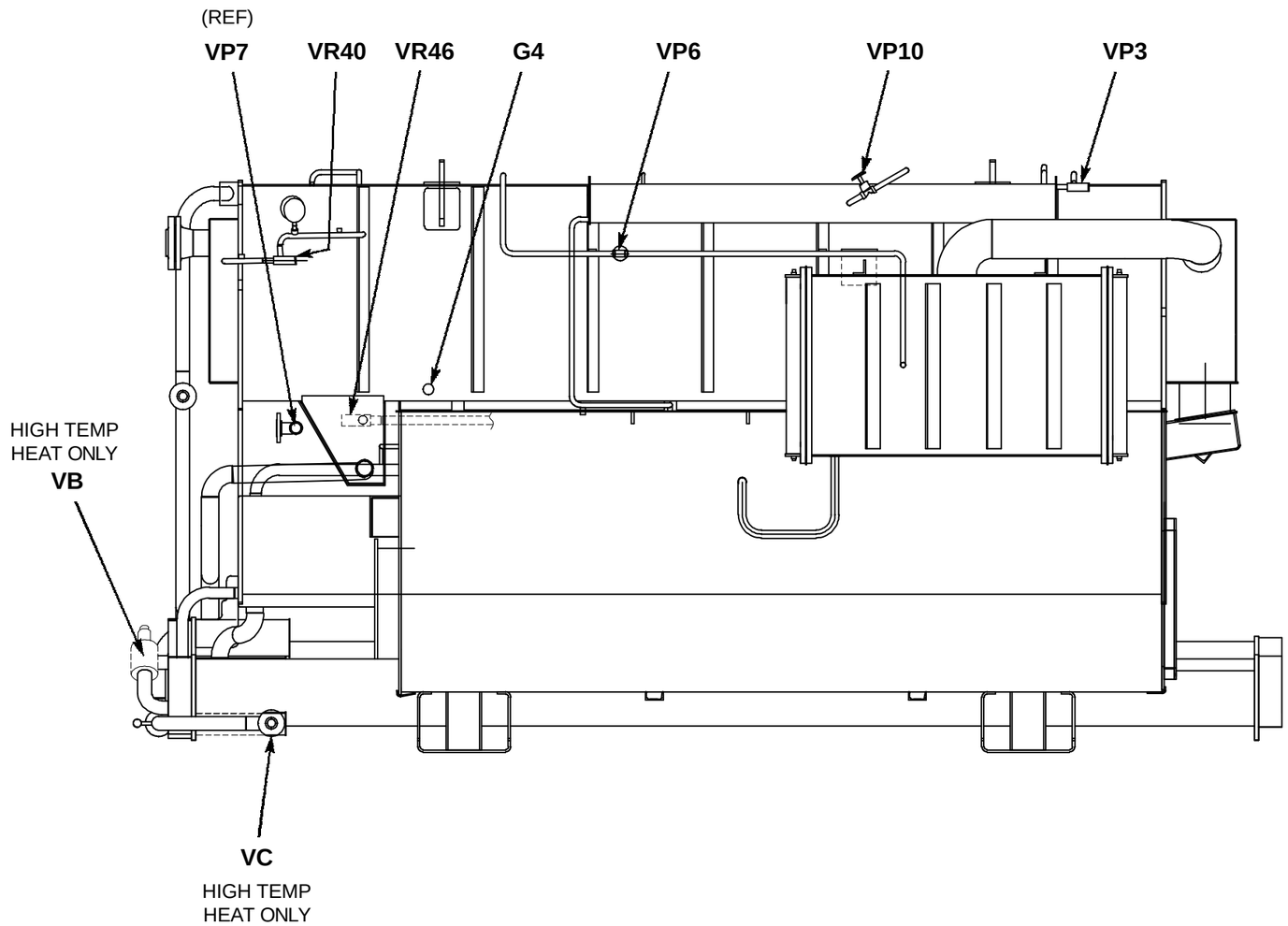

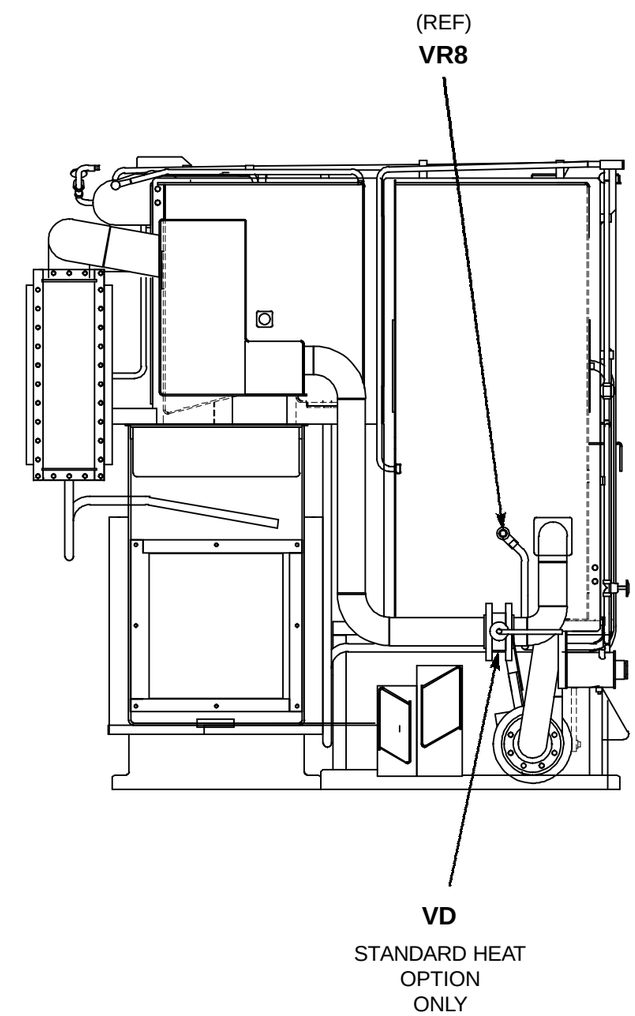

VALVE LOCATION DIAGRAMS

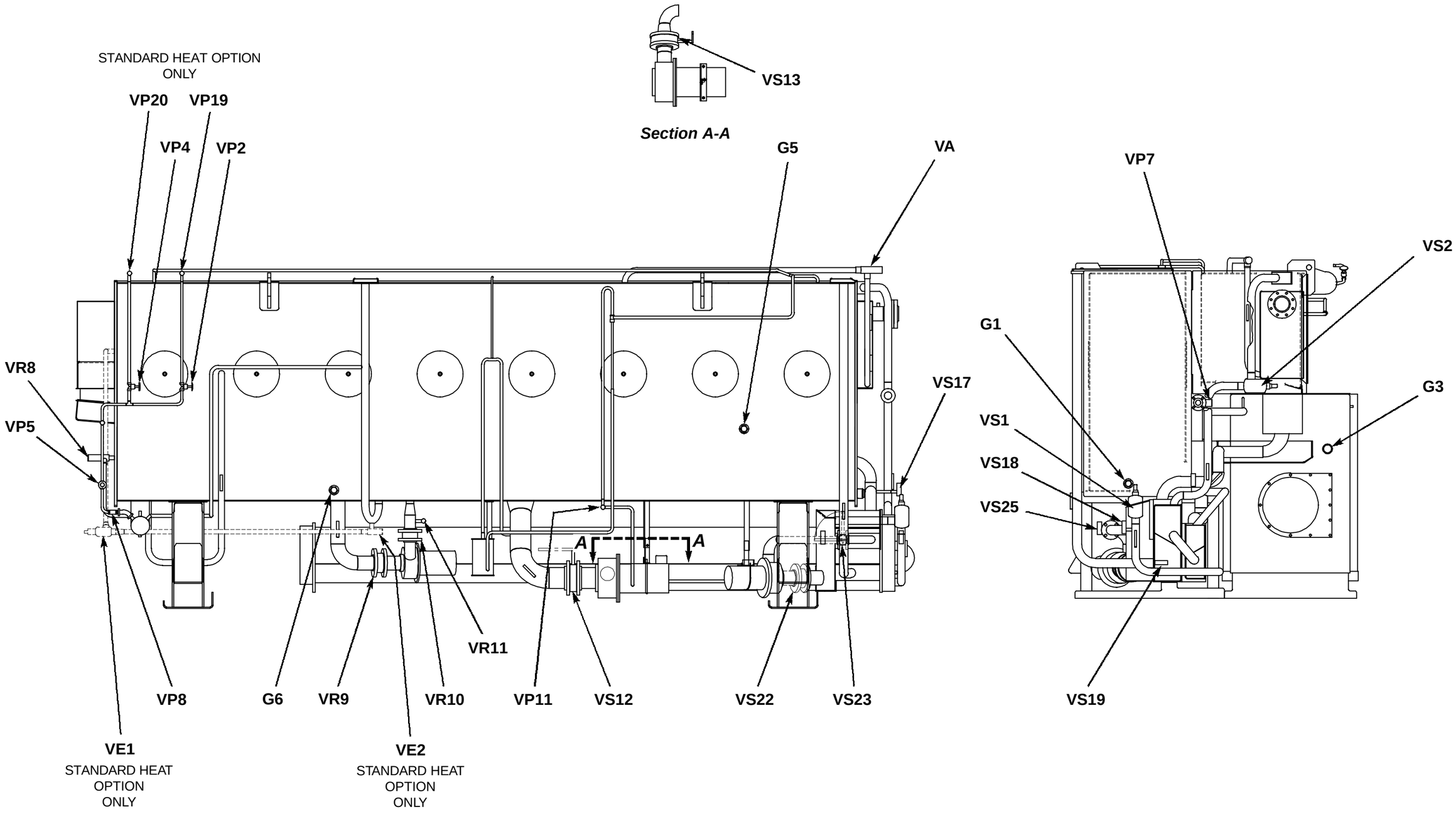

VALVE LOCATION DIAGRAMS

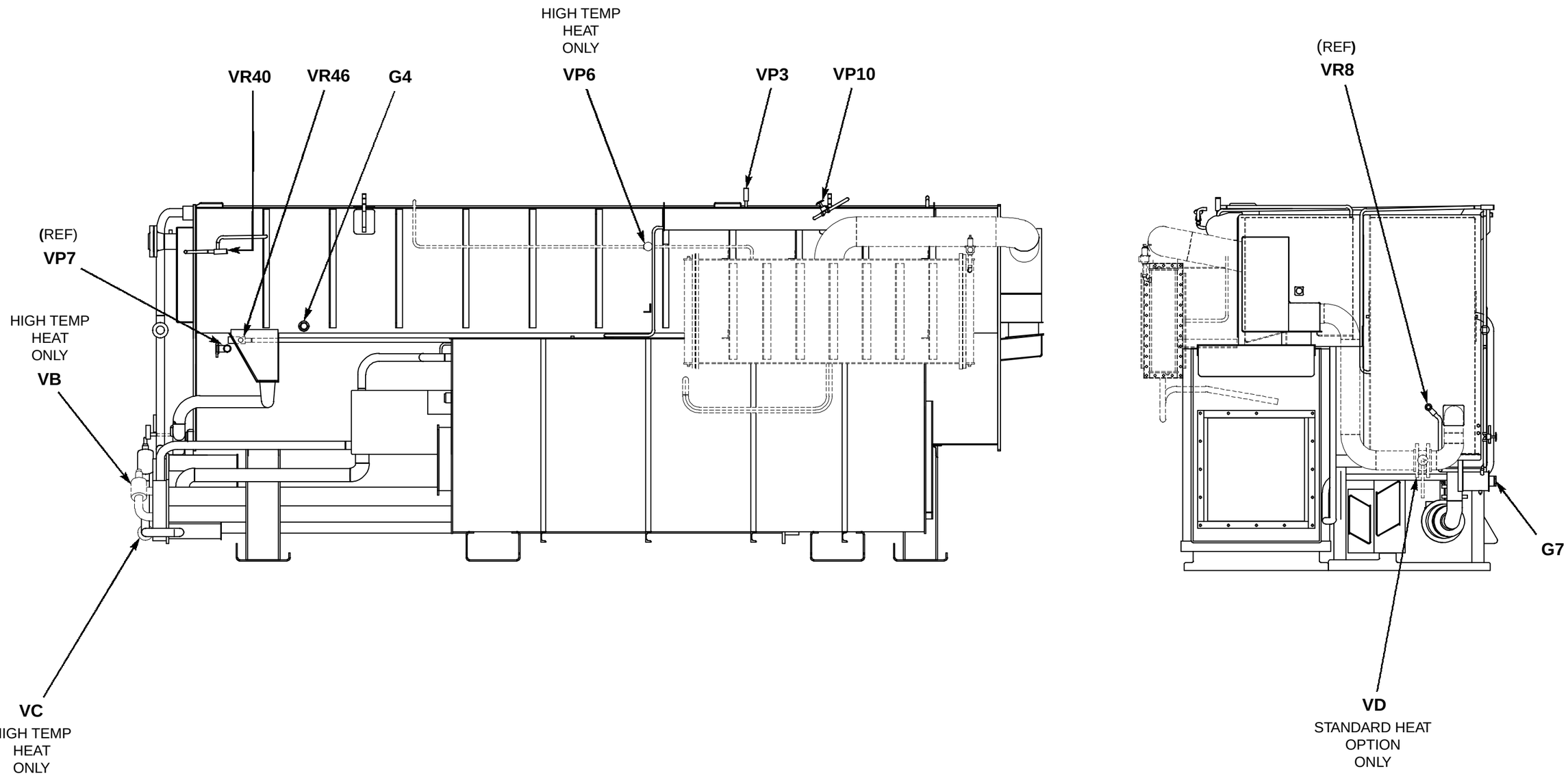

VALVE LOCATION DIAGRAMS

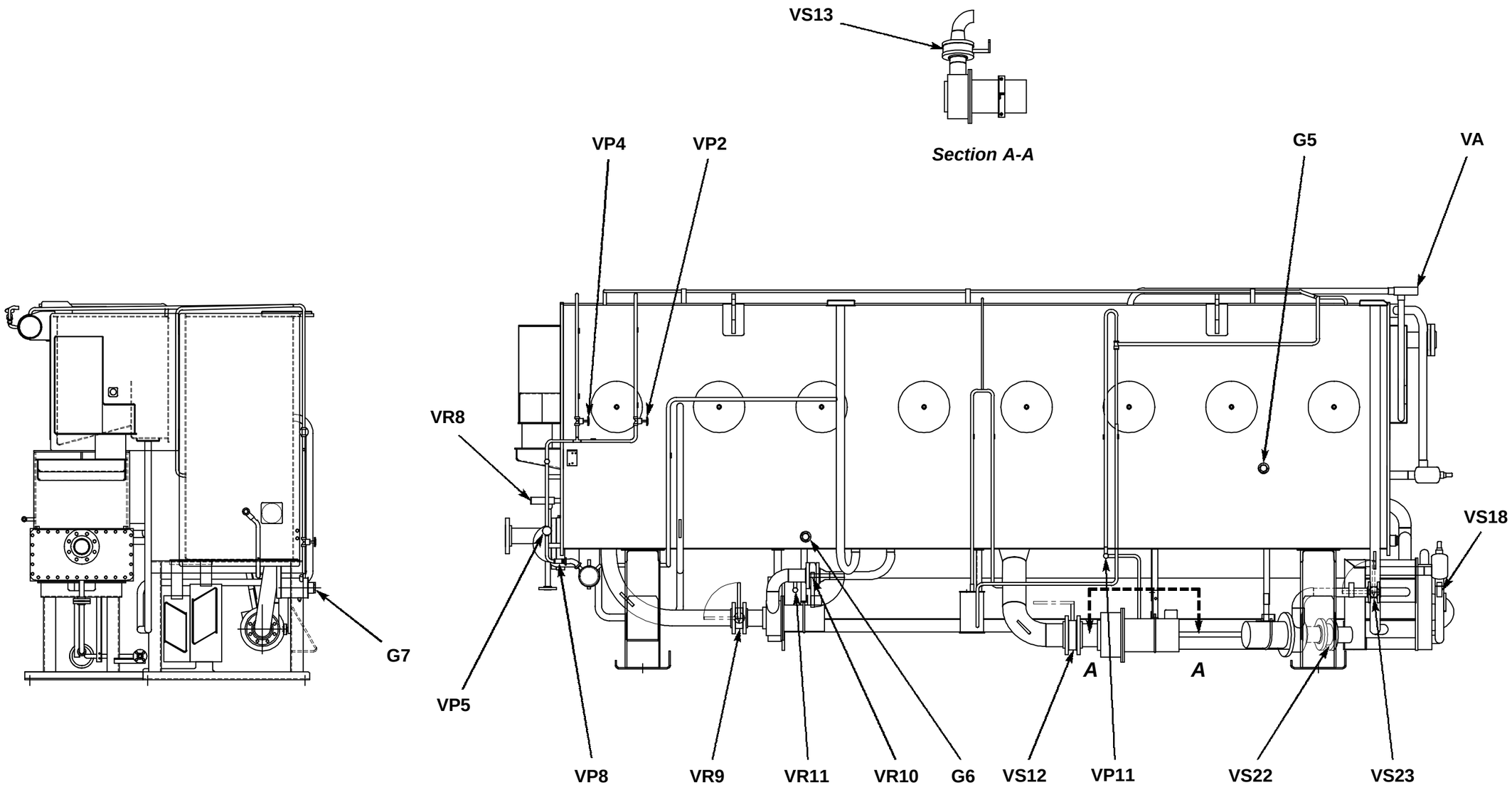
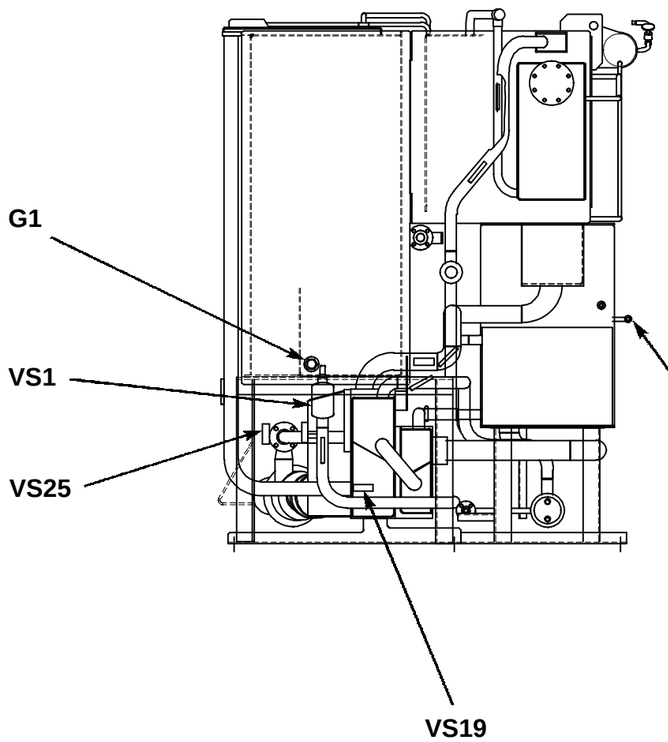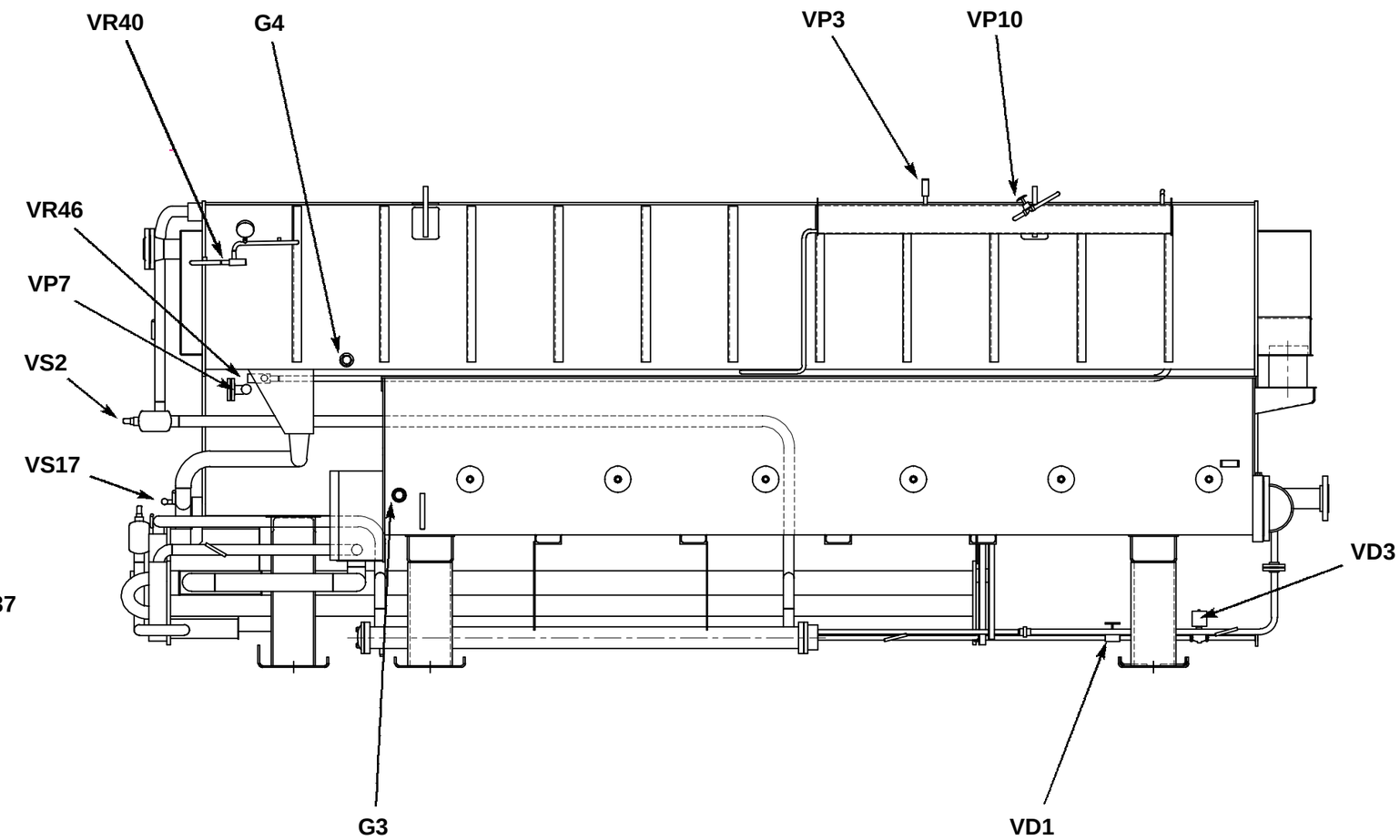
VALVE LOCATION DIAGRAMS