Design Guide

VLT® HVAC Drive FC 100

design award
winner
004

Contents

1. How to Read this Design Guide 5

Copyright, Limitation of Liability and Revision Rights 6
Approvals 7
Symbols 7
Abbreviations 8
Definitions 8

2. Introduction to the VLT HVAC Drive 15

Safety 15
CE labeling 17
Air humidity 19
Aggressive Environments 19
Vibration and shock 20
VLT HVAC Controls 33
PID 35
General aspects of EMC 46
Galvanic isolation (PELV) 49
Ground leakage current 50
Control with brake function 51
Mechanical brake control 54
Extreme running conditions 54
Safe Stop 55

3. VLT HVAC Selection 59

Specifications 59
Efficiency 71
Acoustic noise 73
Peak voltage on motor 73
Special Conditions 74
Options and Accessories 78

4. How to Order 91

Ordering form 91
Ordering Numbers 93

5. How to Install 99

Mechanical Installation 99

Electrical Installation 103
Final Set-Up and Test 116
Additional Connections 119
Installation of misc. connections 123
Safety 126
EMC-correct Installation 127
AC Line Supply Interference/Harmonics 131
Residual Current Device 131

6. Application Examples 133
Start/Stop 133
Pulse Start/Stop 133
Potentiometer Reference 134
Automatic Motor Adaptation (AMA) 134
Smart Logic Control 135
Smart Logic Control Programming 135
SLC Application Example 135
BASIC Cascade Controller 137
Pump Staging with Lead Pump Alternation 138
System Status and Operation 139
Fixed Variable Speed Pump Wiring Diagram 140
Lead Pump Alternation Wiring Diagram 140
Cascade Controller Wiring Diagram 141
Start/Stop conditions 141
Compressor Cascade Control 142

7. RS-485 Installation and Set-up 145
RS-485 Installation and Set-up 145
FC Protocol Overview 148
Network Configuration 149
FC Protocol Message Framing Structure 149
Examples 155
Modbus RTU Overview 156
Modbus RTU Message Framing Structure 157
How to Access Parameters 162
Examples 164
Danfoss FC Control Profile 170

8. Troubleshooting 177
Alarms and warnings 177
Alarm words 180
Warning words 181
Extended status words 182
Fault messages 183

Index 188

1

1. How to Read this Design Guide

1

VLT HVAC Drive FC 100 Series Design Guide Software version: 2.5x

This design guide can be used for all VLT HVAC adjustable frequency drives with software version 2.5x. The software version number can be seen from parameter 15-43.

1

1.1.1. Copyright, Limitation of Liability and Revision Rights

This publication contains information proprietary to Danfoss A/S. By accepting and using this manual, the user agrees that the information contained herein will be used solely for operating equipment from Danfoss A/S or equipment from other vendors, provided that such equipment is intended for communication with Danfoss equipment over a serial communication link. This publication is protected under the copyright laws of Denmark and most other countries.

Danfoss A/S does not guarantee that a software program produced according to the guidelines provided in this manual will function properly in every physical, hardware or software environment.

Although Danfoss A/S has tested and reviewed the documentation within this manual, Danfoss A/S makes no warranty or representation, neither expressed nor implied, with respect to this documentation, including its quality, performance, or fitness for a particular purpose.

In no event shall Danfoss A/S be liable for direct, indirect, special, incidental or consequential damages arising from the use or the inability to use information contained in this manual, even if advised of the possibility of such damages. In particular, Danfoss A/S is not responsible for any costs, including, but not limited to, those incurred as a result of lost profits or revenue, loss of or damages to equipment, loss of computer programs, loss of data, the costs to substitute these, or any claims by third parties.

Danfoss A/S reserves the right to revise this publication at any time and to make changes to its contents without prior notice or any obligation to notify former or present users of such revisions or changes.

1.1.2. Available Literature

- Instruction Manual MG.11.Ax.yy provides the neccessary information for getting the drive up and running.
- Design Guide MG.11.Bx.yy provides all the technical information about the drive and customer design and applications.
- Programming Guide MG.11.Cx.yy provides information on how to program and includes complete parameter descriptions.
- Mounting Instruction, Analog I/O Option MCB109, MI.38.Bx.yy
- VLT® 6000 HVAC Application Booklet, MN.60.Ix.yy
- Instruction Manual VLT®HVAC Drive BACnet, MG.11.Dx.yy
- Instruction Manual VLT®HVAC Drive Profibus, MG.33.Cx.yy.
- Instruction Manual VLT®HVAC Drive Device Net, MG.33.Dx.yy
- Instruction Manual VLT® HVAC Drive LonWorks, MG.11.Ex.yy
- Instruction Manual VLT® HVAC Drive High Power, MG.11.Fx.yy
- Instruction Manual VLT® HVAC Drive Metasys, MG.11.Gx.yy

x = Revision number
yy = Language code
Danfoss Drives technical literature is also available online at *www.danfoss.com/BusinessAreas/DrivesSolutions/Documentations/Technical+Documentation.htm*

1.1.3. Approvals

1.1.4. Symbols

Symbols used in this guide.

NOTE
Indicates something to be noted by the reader.

Indicates a general warning.

Indicates a high-voltage warning.

* Indicates default setting

1

1.1.5. Abbreviations

Alternating current	AC
American wire gauge	AWG
Ampere/AMP	A
Automatic Motor Adaptation	AMA
Current limit	I_{LIM}
Degrees Celsius	°C
Direct current	DC
Drive Dependent	D-TYPE
Electro Magnetic Compatibility	EMC
Electronic Thermal Relay	ETR
drive	FC
Gram	g
Hertz	Hz
Kilohertz	kHz
Local Control Panel	LCP
Meter	m
Millihenry Inductance	mH
Milliampere	mA
Millisecond	ms
Minute	min
Motion Control Tool	MCT
Nanofarad	nF
Newton Meters	Nm
Nominal motor current	$I_{M,N}$
Nominal motor frequency	$f_{M,N}$
Nominal motor power	$P_{M,N}$
Nominal motor voltage	$U_{M,N}$
Parameter	par.
Protective Extra Low Voltage	PELV
Printed Circuit Board	PCB
Rated Inverter Output Current	I_{INV}
Revolutions Per Minute	RPM
Second	s
Torque limit	T_{LIM}
Volt	V

1.1.6. Definitions

Drive:

$I_{VLT,MAX}$
The maximum output current.

$I_{VLT,N}$
The rated output current supplied by the adjustable frequency drive.

$U_{VLT, MAX}$
The maximum output voltage.

Input:

Control command You can start and stop the connected motor using the LCP and the digital inputs. Functions are divided into two groups. Functions in group 1 have higher priority than functions in group 2.	Group 1	Reset, Coasting stop, Reset and Coasting stop, Quick stop, DC braking, Stop and the "Off" key.
	Group 2	Start, Pulse start, Reversing, Start reversing, Jog and Freeze output

Motor:

f_{JOG}
The motor frequency when the jog function is activated (via digital terminals).

f_M
The motor frequency.

f_{MAX}
The maximum motor frequency.

f_{MIN}
The minimum motor frequency.

$f_{M,N}$
The rated motor frequency (nameplate data).

I_M
The motor current.

$I_{M,N}$
The rated motor current (nameplate data).

$n_{M,N}$
The rated motor speed (nameplate data).

$P_{M,N}$
The rated motor power (nameplate data).

$T_{M,N}$
The rated torque (motor).

U_M
The instantaneous motor voltage.

$U_{M,N}$
The rated motor voltage (nameplate data).

1

Break-away torque

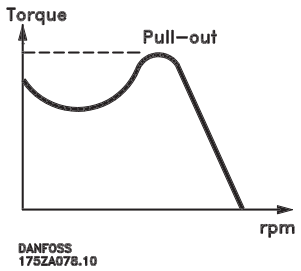

η_{VLT}
The efficiency of the adjustable frequency drive is defined as the ratio between the power output and the power input.

Start-disable command
A stop command belonging to the group 1 control commands - see this group.

Stop command
See Control commands.

References:

Analog Reference
A signal transmitted to the analog inputs 53 or 54 can be voltage or current.

Bus Reference
A signal transmitted to the serial communication port (FC port).

Preset Reference
A defined preset reference to be set from -100% to +100% of the reference range. Selection of eight preset references via the digital terminals.

Pulse Reference
A pulse frequency signal transmitted to the digital inputs (terminal 29 or 33).

Ref_{MAX}
Determines the relationship between the reference input at 100% full scale value (typically 10 V, 20 mA) and the resulting reference. The maximum reference value set in par. 3-03.

Ref_{MIN}
Determines the relationship between the reference input at 0% value (typically 0 V, 0 mA, 4 mA) and the resulting reference. The minimum reference value set in par. 3-02.

Miscellaneous:

Analog Inputs
The analog inputs are used for controlling various functions of the adjustable frequency drive.
There are two types of analog inputs:
Current input, 0-20 mA and 4-20 mA
Voltage input, 0-10 V DC.

Analog Outputs
The analog outputs can supply a signal of 0-20 mA, 4-20 mA, or a digital signal.

Automatic Motor Adaptation, AMA
AMA algorithm determines the electrical parameters for the connected motor at standstill.

Brake Resistor
The brake resistor is a module capable of absorbing the braking energy generated in regenerative braking. This regenerative braking energy increases the intermediate circuit voltage, while a brake chopper ensures that the energy is transmitted to the brake resistor.

CT Characteristics
Constant torque characteristics used for screw and scroll refrigeration compressors.

Digital Inputs
The digital inputs can be used for controlling various functions of the adjustable frequency drive.

Digital Outputs
The drive features two solid state outputs that can supply a 24 V DC (max. 40 mA) signal.

DSP
Digital Signal Processor.

Relay Outputs:
The adjustable frequency drive features two programmable relay outputs.

ETR
Electronic Thermal Relay is a thermal load calculation based on present load and time. Its purpose is to estimate the motor temperature.

GLCP:
Graphical Local Control Panel (LCP102)

Initializing
If initializing is carried out (par. 14-22), the programmable parameters of the adjustable frequency drive return to their default settings.

Intermittent Duty Cycle
An intermittent duty rating refers to a sequence of duty cycles. Each cycle consists of an on-load and an off-load period. The operation can be either a periodic or non-periodic duty.

LCP
The Local Control Panel (LCP) makes up a complete interface for control and programming of the adjustable frequency drive. The control panel is detachable and can be installed up to 9.8 ft (3 meters) from the adjustable frequency drive, i.e. in a front panel by means of the installation kit option.
The local control panel is available in two versions:

- Numerical LCP101 (NLCP)
- Graphical LCP102 (GLCP)

lsb
Least significant bit.

MCM
Short for Mille Circular Mil, an American measuring unit for cable cross-section. 1 MCM ≡ 0.00079 in.^{2} (0.5067 mm^2).

msb
Most significant bit.

NLCP
Numerical Local Control Panel LCP101

Online/Offline Parameters
Changes to online parameters are activated immediately after the data value is changed. Changes to offline parameters are not activated until you enter [OK] on the LCP.

PID Controller
The PID controller maintains the desired speed, pressure, temperature, etc. by adjusting the output frequency to match the varying load.

RCD
Residual Current Device.

Set-up
You can save parameter settings in four set-ups. Change between the four parameter set-ups and edit one while another set-up is active.

SFAVM
Switching pattern called Stator Flux oriented Asynchronous Vector Modulation (par. 14-00).

Slip Compensation
The adjustable frequency drive compensates for the motor slip by giving the frequency a supplement that follows the measured motor load, thus keeping the motor speed almost constant.

Smart Logic Control (SLC)
The SLC is a sequence of user-defined actions executed when the associated user-defined events are evaluated as true by the SLC.

Thermistor:
A temperature-dependent resistor placed where the temperature is to be monitored (adjustable frequency drive or motor).

Trip
A state entered in fault situations, such as when the adjustable frequency drive is subject to an overtemperature, or when the adjustable frequency drive is protecting the motor, process or mechanism. Restart is prevented until the cause of the fault has rectified and the trip state is cancelled by activating reset, or, in some cases, by programming an automatic reset. Trip may not be used as a personal safety measure.

Trip-Locked
A state entered in fault situations when the adjustable frequency drive is protecting itself and requiring physical intervention, such as when the adjustable frequency drive is subject to a short circuit on the output. A locked trip can only be cancelled by cutting off line power, removing the cause of the fault and reconnecting the adjustable frequency drive. Restart is prevented until the trip state is cancelled by activating reset or, in some cases, by being programmed to reset automatically. The trip-lock function may not be used as a personal safety measure.

VT Characteristics
Variable torque characteristics used for pumps and fans.

VVCplus
Compared with standard voltage/frequency ratio control, voltage vector control (VVC^{plus}) improves the dynamics and the stability, both when the speed reference is changed and in relation to the load torque.

60° AVM
Switching pattern called 60°Asynchronous Vector Modulation (See par. 14-00).

1.1.7. Power Factor

The power factor is the relation between I_1 and I_{RMS}.

$$Power\ \ factor = \frac{\sqrt{3} \times U \times I_1 \times COS\varphi}{\sqrt{3} \times U \times I_{RMS}}$$

The power factor for 3-phase control:

$$= \frac{I_1 \times cos\varphi 1}{I_{RMS}} = \frac{I_1}{I_{RMS}} \quad since\ \ cos\varphi 1 = 1$$

The power factor indicates to which extent the adjustable frequency drive imposes a load on the line supply.
The lower the power factor, the higher the I_{RMS} for the same kW performance.

$$I_{RMS} = \sqrt{I_1^2 + I_5^2 + I_7^2 + \ldots + I_n^2}$$

In addition, a high power factor indicates that the different harmonic currents are low.
The adjustable frequency drive's built-in DC coils produce a high power factor, which minimizes the imposed load on the line power supply.

2

2. Introduction to the VLT HVAC Drive

2.1. Safety

2.1.1. Safety note

The voltage of the adjustable frequency drive is dangerous whenever connected to line power. Incorrect installation of the motor, adjustable frequency drive or serial communication bus may cause damage to the equipment, serious personal injury or death. Consequently, the instructions in this manual, as well as national and local rules and safety regulations, must be followed.

Safety Regulations

1. The adjustable frequency drive must be disconnected from line power if repair work is to be carried out. Make sure that the line supply has been disconnected and that the necessary time has passed before removing motor and line plugs.
2. The [STOP/RESET] key on the control panel of the adjustable frequency drive does not disconnect the equipment from line power and is thus not to be used as a safety switch.
3. Correct protective grounding of the equipment must be established, the user must be protected against supply voltage, and the motor must be protected against overload in accordance with applicable national and local regulations.
4. The ground leakage currents are higher than 3.5 mA.
5. Protection against motor overload is set by par. 1-90 *Motor Thermal Protection*. If this function is desired, set par. 1-90 to data value [ETR trip] (default value) or data value [ETR warning]. Note: The function is initialized at 1.16 x rated motor current and rated motor frequency. For the North American market: The ETR functions provide class 20 motor overload protection in accordance with NEC.
6. Do not remove the plugs for the motor and line supply while the adjustable frequency drive is connected to line power. Make sure that the line supply has been disconnected and that the necessary time has passed before removing motor and line plugs.
7. Please note that the adjustable frequency drive has more voltage inputs than L1, L2 and L3 when load sharing (linking of DC intermediate circuit) and external 24 V DC have been installed. Make sure that all voltage inputs have been disconnected and that the necessary time has passed before commencing repair work.

Installation at High Altitudes

At altitudes higher than 6,600 feet [2 km], please contact Danfoss Drives regarding PELV.

Warning against Unintended Start

1. The motor can be brought to a stop by means of digital commands, bus commands, references or a local stop while the adjustable frequency drive is connected to line power.

If personal safety considerations make it necessary to ensure that no unintended start occurs, these stop functions are not sufficient.

2. While parameters are being changed, the motor may start. Consequently, the stop key [STOP/RESET] must always be activated, after which data can be modified.
3. A motor that has been stopped may start if faults occur in the electronics of the adjustable frequency drive, or if a temporary overload or a fault in the supply line or the motor connection ceases.

Warning:
Touching the electrical parts may be fatal - even after the equipment has been disconnected from line power.

Also, make sure that other voltage inputs have been disconnected, such as external 24 V DC, load sharing (linkage of DC intermediate circuit), as well as the motor connection for kinetic backup. Refer to *VLT® HVAC Drive Instruction Manual MG.11.Ax.yy* for further safety guidelines.

2.1.2. Caution

Caution

The adjustable frequency drive DC link capacitors remain charged after power has been disconnected. To avoid the risk of electrical shock, disconnect the adjustable frequency drive from the line power before performing maintenance procedures. Wait at least as long as follows before servicing the adjustable frequency drive:

Voltage	Minimum Waiting Time				
	4 min.	**15 min.**	**20 min.**	**30 min.**	**40 min.**
200-240 V	1.5-5 hp [1.1-3.7 kW]	7.5-60 hp [5.5-45 kW]			
380-480 V	1.5-10 hp [1.1-7.5 kW]	15-125 hp [11-90 kW]	150-300 hp [110-200 kW]		350-600 hp [250-450 kW]
525-600 V	1.5-10 hp [1.1-7.5 kW]		150-350 hp [110-250 kW]	450-750 hp [315-560 kW]	
Be aware that there may be high voltage on the DC link even when the LEDs are turned off.					

2.1.3. Disposal Instructions

Equipment containing electrical components may not be disposed of together with domestic waste.
It must be collected separately as electrical and electronic waste according to local and currently valid legislation.

2.2. CE labeling

2.2.1. CE Conformity and Labeling

What is CE Conformity and Labeling?
The purpose of CE labeling is to avoid technical trade obstacles within the EFTA and the EU. The EU has introduced the CE label as a simple way of showing whether a product complies with the relevant EU directives. The CE label says nothing about the specifications or quality of the product. Adjustable frequency drives are regulated by three EU directives:
The machinery directive (98/37/EEC)
All machines with critical moving parts are covered by the Machinery Directive of January 1, 1995. Since an adjustable frequency drive is largely electrical, it does not fall under the Machinery Directive. However, if an adjustable frequency drive is supplied for use in a machine, we provide information on its safety aspects in the manufacturer's declaration.
The low-voltage directive (73/23/EEC)
Adjustable frequency drives must be CE-labeled in accordance with the Low-voltage Directive of January 1, 1997. The directive applies to all electrical equipment and appliances used in the 50-1000 V AC and the 75-1500 V DC voltage ranges. Danfoss uses CE labels in accordance with the directive and will issue a declaration of conformity upon request.
The EMC directive (89/336/EEC)
EMC is short for electromagnetic compatibility. The presence of electromagnetic compatibility means that the mutual interference between different components/appliances does not affect the way the appliances work.
The EMC directive came into effect January 1, 1996. Danfoss uses CE labels in accordance with the directive and will issue a declaration of conformity upon request. To carry out EMC-correct installation, see the instructions in this Design Guide. In addition, we specify the standards with which our products comply. We offer the filters presented in the specifications and provide other types of assistance to ensure the optimum EMC result.

The adjustable frequency drive is most often used by professionals of the trade as a complex component forming part of a larger appliance, system or installation. It must be noted that the responsibility for the final EMC properties of the appliance, system or installation rests with the installer.

2.2.2. What Is Covered

The EU "*Guidelines on the Application of Council Directive 89/336/EEC*" outline three typical situations of using an adjustable frequency drive. See below for EMC coverage and CE labeling.

1. The adjustable frequency drive is sold directly to the end-consumer. For example, it may be sold to a DIY market. The end-consumer is a layman. He installs the adjustable frequency drive himself for use with a hobby machine, a kitchen appliance, etc. For such applications, the adjustable frequency drive must be CE-labeled in accordance with the EMC directive.
2. The adjustable frequency drive is sold for installation in a plant. The plant is built up by professionals of the trade. It could be a production plant or a heating/ventilation plant designed and installed by professionals of the trade. Neither the adjustable frequency drive nor the finished plant must be CE-labeled under the EMC directive. However, the

unit must comply with the basic EMC requirements of the directive. This is ensured by using components, appliances and systems that are CE-labeled under the EMC directive.

3. The adjustable frequency drive is sold as part of a complete system. The system is being marketed as complete and could, for example, be an air-conditioning system. The complete system must be CE-labeled in accordance with the EMC directive. The manufacturer can ensure CE-labeling under the EMC directive either by using CE-labeled components or by testing the EMC of the system. If he chooses to use only CE-labeled components, he does not have to test the entire system.

2.2.3. Danfoss VLT Adjustable Frequency Drive and CE Labeling

CE labeling is a positive feature when used for its original purpose, i.e. to facilitate trade within the EU and EFTA.

However, CE labeling may cover many different specifications. Thus, you must check what a given CE label specifically covers.

The covered specifications can be very different and a CE label may therefore give the installer a false sense of security when using an adjustable frequency drive as a component in a system or an appliance.

Danfoss CE labels the adjustable frequency drives in accordance with the low-voltage directive. This means that if the adjustable frequency drive is installed correctly, we guarantee compliance with the low-voltage directive. Danfoss issues a declaration of conformity that confirms our CE labeling in accordance with the low-voltage directive.

The CE label also applies to the EMC directive provided that the instructions for EMC-correct installation and filtering are followed. On this basis, a declaration of conformity in accordance with the EMC directive is issued.

The Design Guide offers detailed instructions for installation to ensure EMC-correct installation. Furthermore, Danfoss specifies which our different products comply with.

Danfoss gladly provides other types of assistance that can help you obtain the best EMC result.

2.2.4. Compliance with EMC Directive 89/336/EEC

As mentioned, the adjustable frequency drive is mostly used by professionals of the trade as a complex component forming part of a larger appliance, system or installation. It must be noted that the responsibility for the final EMC properties of the appliance, system or installation rests with the installer. To assist the installer, Danfoss has prepared EMC installation guidelines for the Power Drive system. The standards and test levels stated for power drive systems are complied with, provided that the EMC-correct instructions for installation are followed; see the section *EMC Immunity*.

2.3. Air humidity

2.3.1. Air Humidity

The adjustable frequency drive has been designed to meet the IEC/EN 60068-2-3 standard, EN 50178 pkt. 9.4.2.2 at 122°F [50°C].

2.4. Aggressive Environments

An adjustable frequency drive contains a large number of mechanical and electronic components. All are vulnerable to environmental effects to some extent.

> **!** The adjustable frequency drive should not be installed in environments with airborne liquids, particles or gases capable of affecting and damaging the electronic components. Failure to take the necessary protective measures increases the risk of stoppages, thus reducing the life of the adjustable frequency drive.

Liquids can be carried through the air and condense in the adjustable frequency drive and may cause corrosion of components and metal parts. Steam, oil and salt water may cause corrosion of components and metal parts. In such environments, use equipment with enclosure rating IP 55. As an extra protection, coated printet circuit boards can be ordered as an option.

Airborne particles such as dust may cause mechanical, electrical or thermal failure in the adjustable frequency drive. A typical indicator of excessive levels of airborne particles is the presence of dust particles around the adjustable frequency drive fan. In very dusty environments, use equipment with enclosure rating IP 55 or a cabinet for IP 00/IP 20/TYPE 1 equipment.

In environments with high temperatures and humidity, corrosive gases such as sulfur, nitrogen and chlorine compounds will cause chemical processes on the adjustable frequency drive components.

Such chemical reactions will rapidly affect and damage the electronic components. In such environments, mount the equipment in a cabinet with fresh air ventilation, keeping aggressive gases away from the adjustable frequency drive.
An extra protection in such areas is a coating of the printed circuit boards, which can be ordered as an option.

> **NOTE**
> Mounting adjustable frequency drives in aggressive environments increases the risk of stoppages and considerably reduces the life of the drive.

Before installing the adjustable frequency drive, check the ambient air for liquids, particles and gases. This is done by observing existing installations in this environment. A typical indicator of harmful airborne liquids is the presence of water or oil on metal parts, or the corrosion of metal parts.

Excessive dust particle levels are often found on installation cabinets and existing electrical installations. One indicator of aggressive airborne gases is the blackening of copper rails and cable ends on existing installations.

2.5. Vibration and shock

The adjustable frequency drive has been tested according to the procedure based on the shown standards:

The adjustable frequency drive complies with requirements that exist for units mounted on the walls and floors of production premises, as well as in panels bolted to walls or floors.

IEC/EN 60068-2-6:	Vibration (sinusoidal) - 1970
IEC/EN 60068-2-64:	Vibration, broad-band random

2.6. Advantages

2.6.1. Why use an adjustable frequency drive for controlling fans and pumps?

An adjustable frequency drive takes advantage of the fact that centrifugal fans and pumps follow the laws of proportionality for such fans and pumps. For further information, see *The Laws of Proportionality* text.

2.6.2. The clear advantage - energy savings

The very clear advantage of using an adjustable frequency drive for controlling the speed of fans or pumps lies in the electricity savings.
Compared to alternative control systems and technologies, an adjustable frequency drive is the optimum energy control system for controlling fan and pump systems.

2.6.3. Example of energy savings

As can be seen from the figure (the laws of proportionality), the flow is controlled by changing the rpm. By reducing the rated speed by only 20%, the flow is also reduced by 20%. This is because the flow is directly proportional to the rpm. The consumption of electricity, however, is reduced by 50%.
If the system in question only needs to be able to supply a flow corresponding to 100% a few days each year, while the average is below 80% of the rated flow for the remainder of the year, the amount of energy saved is even greater than 50%.

The laws of proportionality

The figure below describes the dependence of flow, pressure and power consumption on rpm.

Q = Flow	P = Power
Q_1 = Rated flow	P_1 = Rated power
Q_2 = Reduced flow	P_2 = Reduced power
H = Pressure	n = Speed regulation
H_1 = Rated pressure	n_1 = Rated speed
H_2 = Reduced pressure	n_2 = Reduced speed

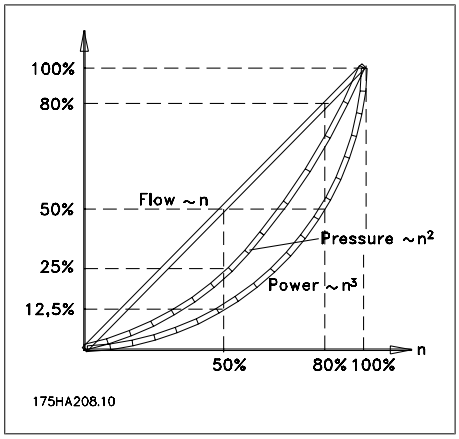

$$Flow : \frac{Q_1}{Q_2} = \frac{n_1}{n_2}$$

$$Pressure : \frac{H_1}{H_2} = \left(\frac{n_1}{n_2}\right)^2$$

$$Power : \frac{P_1}{P_2} = \left(\frac{n_1}{n_2}\right)^3$$

2.6.4. Example with varying flow over 1 year

The example below is calculated on the basis of pump characteristics obtained from a pump datasheet.
The result obtained shows energy savings in excess of 50% at the given flow distribution over a year. The pay back period depends on the price per kwh and the price of the adjustable frequency drive. In this example, it is less than a year when compared with valves and constant speed.

2

Pump characteristics

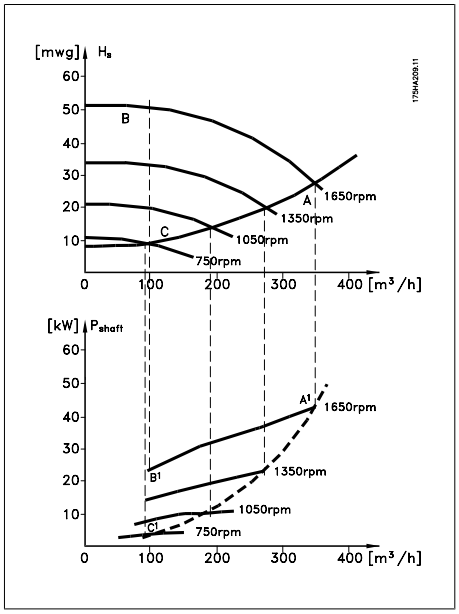

Energy savings

$P_{shaft}=P_{shaft\ output}$

Flow distribution over 1 year

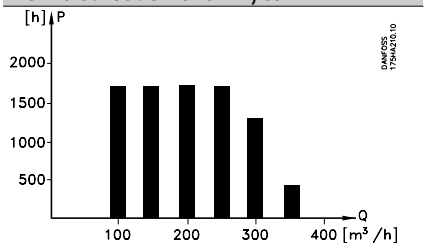

m^3/h	Distribution		Valve regulation		Adjustable frequency drive control	
	%	Hours	Power	Consumption	Power	Consumption
			A_1 - B_1	kWh	A_1 - C_1	kWh
350	5	438	42.5	18,615	42.5	18,615
300	15	1314	38.5	50,589	29.0	38,106
250	20	1752	35.0	61,320	18.5	32,412
200	20	1752	31.5	55,188	11.5	20,148
150	20	1752	28.0	49,056	6.5	11,388
100	20	1752	23.0	40,296	3.5	6,132
Σ	100	8760		275,064		26,801

2.6.5. Better control

If an adjustable frequency drive is used for controlling the flow or pressure of a system, improved control is obtained.
An adjustable frequency drive can vary the speed of the fan or pump, thereby obtaining variable control of flow and pressure.
Furthermore, an adjustable frequency drive can quickly adapt the speed of the fan or pump to new flow or pressure conditions in the system.
Simple control of process (flow, level or pressure) utilizing the built-in PID control.

2.6.6. Cos φ compensation

Generally speaking, an adjustable frequency drive with a cos φ of 1 provides power factor correction for the cos φ of the motor, which means that there is no need to make allowance for the cos φ of the motor when sizing the power factor correction unit.

2.6.7. Star/delta starter or soft-starter not required

When larger motors are started, it is necessary in many countries to use equipment that limits the start-up current. In more traditional systems, a star/delta starter or soft-starter is widely used. Such motor starters are not required if an adjustable frequency drive is used.

As illustrated in the figure below, an adjustable frequency drive does not consume more than rated current.

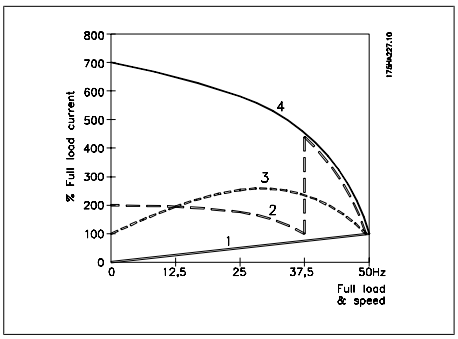

1 = VLT HVAC Drive
2 = Star/delta starter
3 = Soft-starter
4 = Start directly on line power

2.6.8. The cost of using an adjustable frequency drive is not significantly high.

The example on the following page shows that a lot of extra equipment is not required when an adjustable frequency drive is used. It is possible to calculate the cost of installing the two different systems. In the example, the two systems can be established at roughly the same price.

2.6.9. Without an adjustable frequency drive

The figure shows a fan system made in the traditional way.

D.D.C.	=	Direct Digital Control	E.M.S.	=	Energy Management system
V.A.V.	=	Variable Air Volume			
Sensor P	=	Pressure	Sensor T	=	Temperature

2

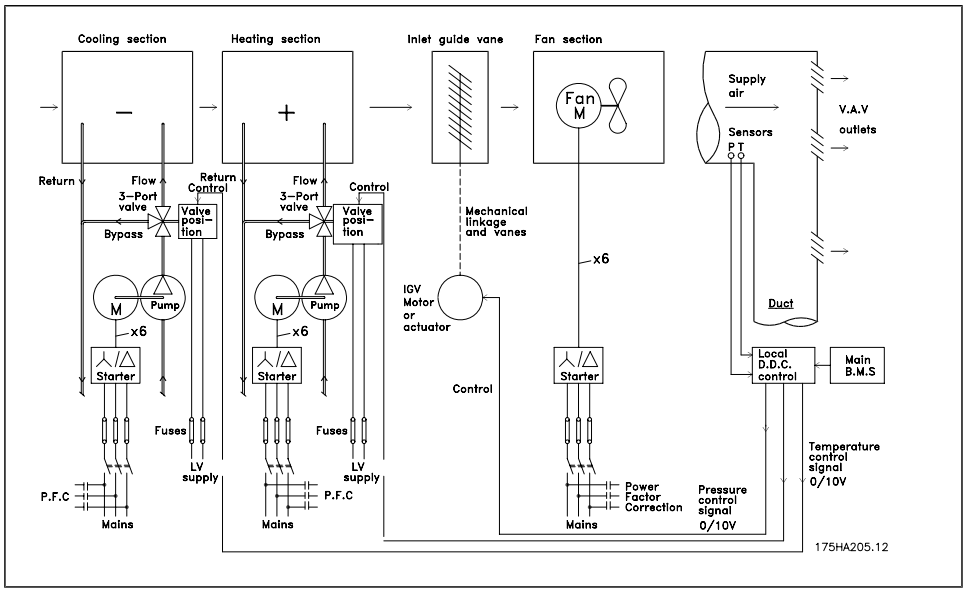

2.6.10. With an adjustable frequency drive

The figure shows a fan system controlled by adjustable frequency drives.

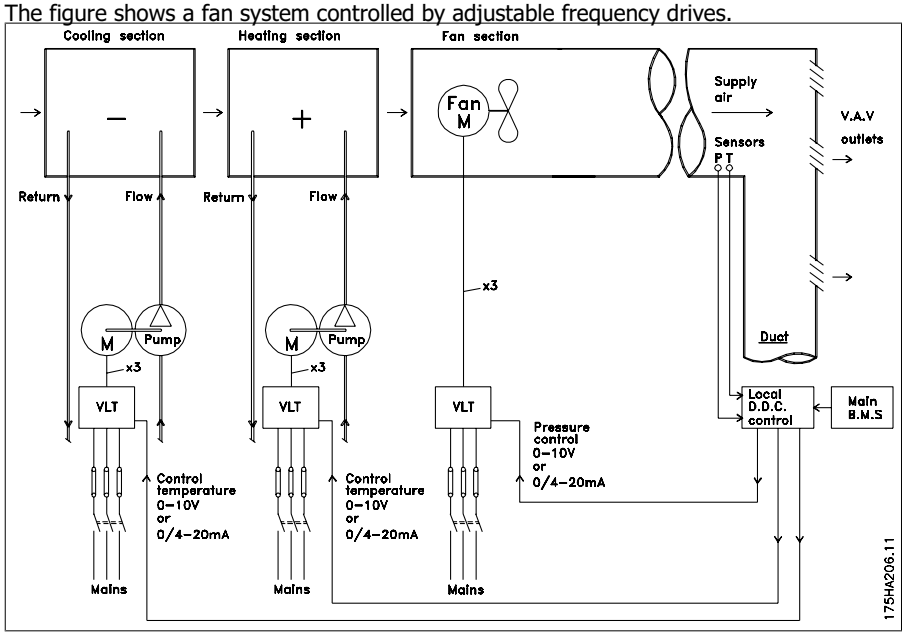

2.6.11. Application examples

The next few pages give typical examples of applications within HVAC.
If you would like to receive further information about a given application, please ask your Danfoss supplier for an information sheet that gives a full description of the application.

Variable Air Volume

Ask for The Drive to...Improving Variable Air Volume Ventilation Systems MN.60.A1.02

Constant Air Volume

Ask for The Drive to...Improving Constant Air Volume Ventilation Systems MN.60.B1.02

Cooling Tower Fan

Ask for The Drive to...Improving Fan Control on Cooling Towers MN.60.C1.02

Condenser pumps

Ask for The Drive to...Improving Condenser Water Pumping Systems MN.60.F1.02

Primary pumps

Ask for The Drive to...Improve Your Primary Pumping in Primary/Secondary Pumping Systems MN.60.D1.02

Secondary pumps

Ask for The Drive to...Improve Your Secondary Pumping in Primary/Secondary Pumping Systems MN.60.E1.02

2.6.12. Variable Air Volume

VAV or Variable Air Volume systems, are used to control both the ventilation and temperature to satisfy the requirements of a building. Central VAV systems are considered to be the most energy efficient method to air condition buildings. By designing central systems instead of distributed systems, greater efficiency can be obtained.
This greater efficiency is a result of utilizing larger fans and larger chillers, which have much higher efficiency rates than small motors and distributed air-cooled chillers. Savings are also a result of decreased maintenance requirements.

2.6.13. The VLT solution

While dampers and IGVs work to maintain a constant pressure in the ductwork, an adjustable frequency drive solution saves much more energy and reduces the complexity of the installation. Instead of creating an artificial pressure drop or causing a decrease in fan efficiency, the adjustable frequency drive decreases the speed of the fan to provide the flow and pressure required by the system.
Centrifugal devices such as fans behave according to the centrifugal laws. This means the fans decrease the pressure and flow they produce as their speed is reduced. Their power consumption is thereby significantly reduced.
The return fan is frequently controlled to maintain a fixed difference in airflow between the supply and return. The advanced PID controller of the VLT HVAC Drive can be used to eliminate the need for additional controllers.

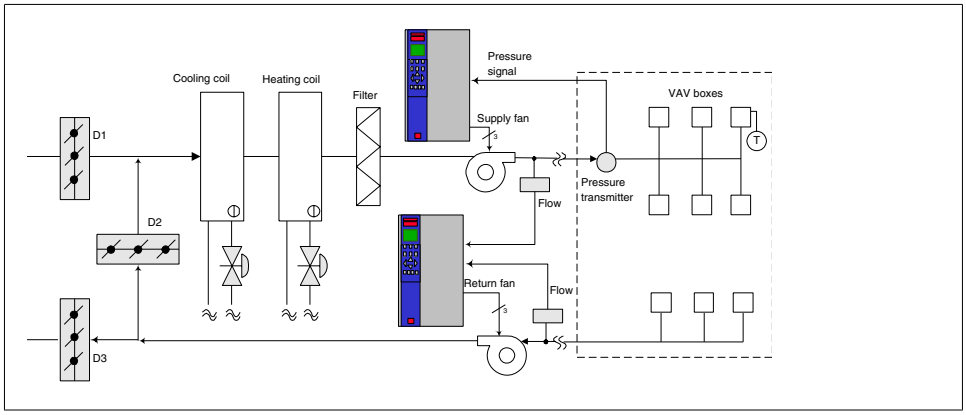

2.6.14. Constant Air Volume

CAV, or Constant Air Volume systems, are central ventilation systems usually used to supply large common zones with the minimum amounts of fresh tempered air. They preceded VAV systems and therefore are found in older, multi-zoned commercial buildings as well. These systems preheat certain amounts of fresh air utilizing Air Handling Units (AHUs) with a heating coil, and many are also used to air condition buildings and have a cooling coil. Fan coil units are frequently used to assist in the heating and cooling requirements in the individual zones.

2.6.15. The VLT solution

With an adjustable frequency drive, significant energy savings can be obtained while maintaining decent control of the building. Temperature sensors or CO_2 sensors can be used as feedback signals to adjustable frequency drives. Whether controlling temperature, air quality, or both, a CAV system can be controlled to operate based on actual building conditions. As the number of people in the controlled area decreases, the need for fresh air decreases. The CO2 sensor detects lower levels and decreases the speed of the supply fans. The return fan modulates to maintain a static pressure setpoint or fixed difference between the supply and return air flows.

With temperature control (especially used in air conditioning systems), as the outside temperature varies and the number of people in the controlled zone changes, different cooling requirements arise. As the temperature decreases below the setpoint, the supply fan can decrease its speed. The return fan modulates to maintain a static pressure setpoint. By decreasing the air flow, energy used to heat or cool the fresh air is also reduced, adding further savings.
Several features of the Danfoss HVAC dedicated adjustable frequency drive, the VLT® HVAC Drive can be utilized to improve the performance of your CAV system. One concern of controlling a ventilation system is poor air quality. The programmable minimum frequency can be set to maintain a minimum amount of supply air, regardless of the feedback or reference signal. The adjustable frequency drive also includes a 3-zone, 3-setpoint PID controller which allows monitoring of both temperature and air quality. Even if the temperature requirement is satisfied, the drive will maintain enough supply air to satisfy the air quality sensor. The controller is capable of monitoring and comparing two feedback signals to control the return fan by maintaining a fixed differential air flow between the supply and return ducts as well.

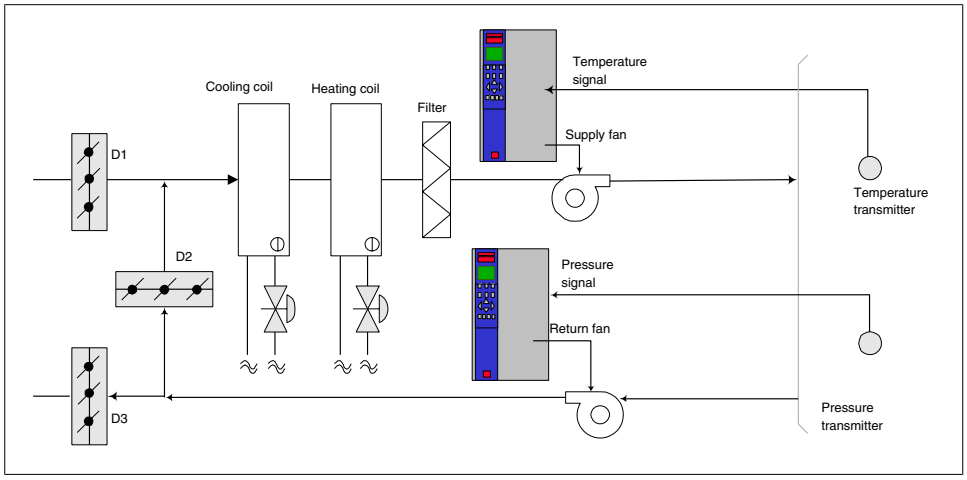

2.6.16. Cooling Tower Fan

Cooling tower fans are used to cool condenser water in water-cooled chiller systems. Water-cooled chillers provide the most efficient means of creating chilled water. They are as much as 20% more efficient than air-cooled chillers. Depending on climate, cooling towers are often the most energy efficient method of cooling the condenser water from chillers.
They cool the condenser water by evaporation.
The condenser water is sprayed into the cooling tower, onto the cooling tower's "fill" to increase its surface area. The tower fan blows air through the fill and sprays water to aid in the evaporation. Evaporation removes energy from the water, thus dropping its temperature. The cooled water collects in the cooling towers basin, where it is pumped back into the chiller's condenser, and the cycle is then repeated.

2.6.17. The VLT solution

With an adjustable frequency drive, the cooling towers fans can be set to the speed required to maintain the condenser water temperature. The adjustable frequency drives can also be used to turn the fan on and off as needed.

Several features of the Danfoss HVAC dedicated drive, the VLT HVAC Drive can be utilized to improve the performance of your cooling tower fan application. As the cooling tower fans drop below a certain speed, the effect the fan has on cooling the water becomes insignificant. Also, when utilizing a gear-box to frequency control the tower fan, a minimum speed of 40-50% may be required.
The customer programmable minimum frequency setting is available to maintain this minimum frequency even as the feedback or speed reference calls for lower speeds.

Another standard feature is the "sleep" mode, which allows the user to program the adjustable frequency drive to stop the fan until a higher speed is required. Additionally, some cooling tower fans have undesireable frequencies that may cause vibrations. These frequencies can easily be avoided by programming the bypass frequency ranges in the adjustable frequency drive.

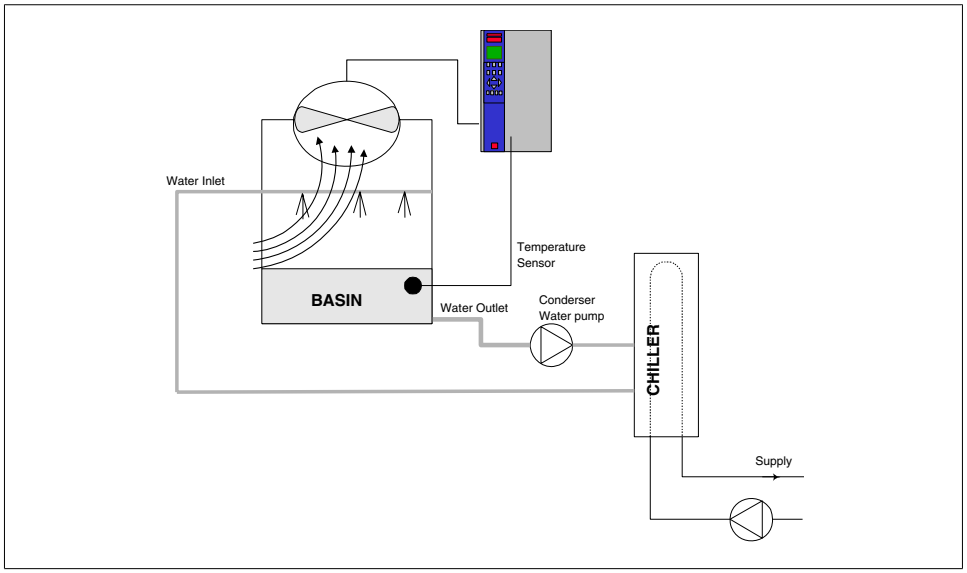

2.6.18. Condenser pumps

Condenser water pumps are primarily used to circulate water through the condenser section of water cooled chillers and their associated cooling tower. The condenser water absorbs the heat from the chiller's condenser section and releases it into the atmosphere in the cooling tower. These systems are used to provide the most efficient means of creating chilled water, and they are as much as 20% more efficient than air cooled chillers.

2.6.19. The VLT solution

Adjustable frequency drives can be added to condenser water pumps instead of balancing the pumps with a throttling valve or trimming the pump impeller.

Using an adjustable frequency drive instead of a throttling valve simply saves the energy that would have been absorbed by the valve. This can amount to savings of 15-20% or more. Trimming the pump impeller is irreversible, thus if the conditions change and higher flow is required the impeller must be replaced.

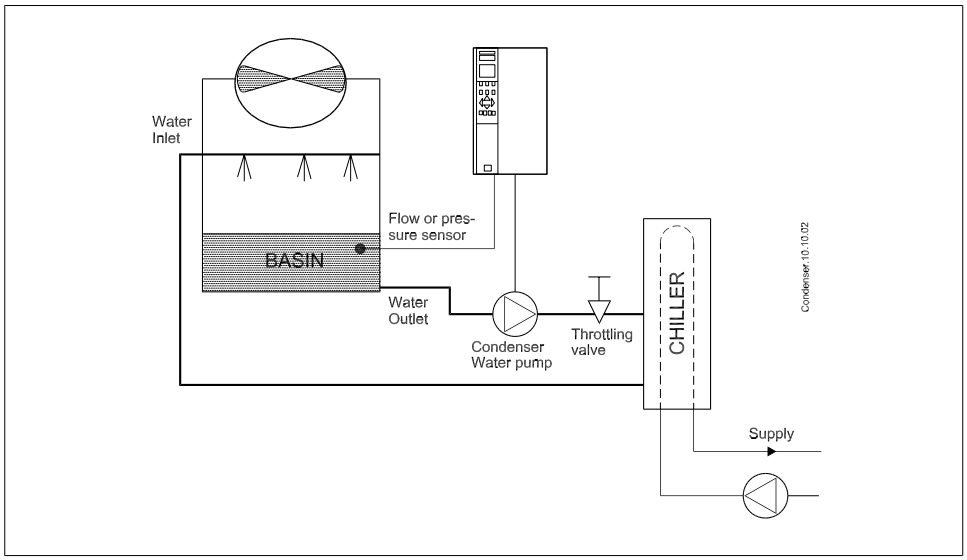

2.6.20. Primary pumps

Primary pumps in a primary/secondary pumping system can be used to maintain a constant flow through devices that encounter operation or control difficulties when exposed to variable flow. The primary/secondary pumping technique decouples the "primary" production loop from the "secondary" distribution loop. This allows devices such as chillers to obtain constant design flow and operate properly while allowing the rest of the system to vary in flow.

As the evaporator flow rate decreases in a chiller, the chilled water begins to become overly chilled. As this happens, the chiller attempts to decrease its cooling capacity. If the flow rate drops far enough, or too quickly, the chiller cannot shed its load sufficiently and the chiller's low evaporator temperature safety trips the chiller, requiring a manual reset. This situation is common in large installations, especially when two or more chillers are installed in parallel and primary/secondary pumping is not utilized.

2.6.21. The VLT solution

Depending on the size of the system and the size of the primary loop, the energy consumption of the primary loop can become substantial.
An adjustable frequency drive can be added to the primary system to replace the throttling valve and/or trimming of the impellers, leading to reduced operating expenses. Two control methods are common:

The first method uses a flow meter. Because the desired flow rate is known and constant, a flow meter installed at the discharge of each chiller can be used to control the pump directly. Using the built-in PID controller, the adjustable frequency drive will always maintain the appropriate flow rate, even compensating for the changing resistance in the primary piping loop as chillers and their pumps are staged on and off.

The other method is local speed determination. The operator simply decreases the output frequency until the design flow rate is achieved.

MG.11.B5.22 - VLT® is a registered Danfoss trademark.

Using a adjustable frequency drive to decrease the pump speed is very similar to trimming the pump impeller, except it doesn't require any labor and the pump efficiency remains higher. The balancing contractor simply decreases the speed of the pump until the proper flow rate is achieved and leaves the speed fixed. The pump will operate at this speed any time the chiller is staged on. Because the primary loop doesn't have control valves or other devices that can cause the system curve to change, and because the variance due to staging pumps and chillers on and off is usually small, this fixed speed will remain appropriate. In the event the flow rate needs to be increased later in the systems life, the adjustable frequency drive can simply increase the pump speed instead of requiring a new pump impeller.

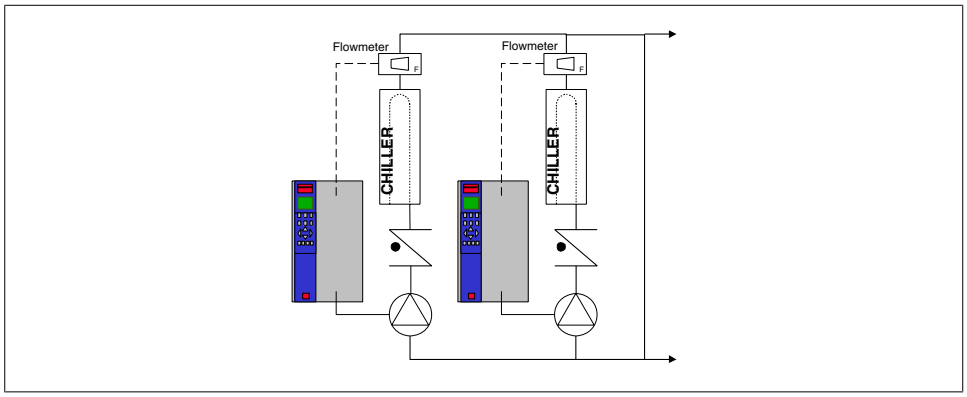

2.6.22. Secondary pumps

Secondary pumps in a primary/secondary chilled water pumping system are used to distribute the chilled water to the loads from the primary production loop. The primary/secondary pumping system is used to hydraulically decouple one piping loop from another. In this case, the primary pump is used to maintain a constant flow through the chillers while allowing the secondary pumps to vary in flow, increase control and save energy.
If the primary/secondary design concept is not used and a variable volume system is designed, the chiller cannot shed its load properly when the flow rate drops far enough or too quickly. The chiller's low evaporator temperature safety then trips the chiller, requiring a manual reset. This situation is common in large installations, especially when two or more chillers are installed in parallel.

2.6.23. The VLT solution

While the primary-secondary system with two-way valves improves energy savings and eases system control problems, the true energy savings and control potential is realized by adding adjustable frequency drives.
With the proper sensor location, the addition of adjustable frequency drives allows the pumps to vary their speed to follow the system curve instead of the pump curve.
This results in the elimination of wasted energy and eliminates most of the over-pressurization to which two-way valves can be subjected.
As the monitored loads are reached, the two-way valves close down. This increases the differential pressure measured across the load and two-way valve. As this differential pressure starts to rise, the pump is slowed to maintain the control head also called setpoint value. This setpoint value is calculated by adding the pressure drop of the load and the two-way valve under design conditions.

NOTE
Please note that when running multiple pumps in parallel, they must run at the same speed to maximize energy savings, either with individual dedicated drives or one drive running multiple pumps in parallel.

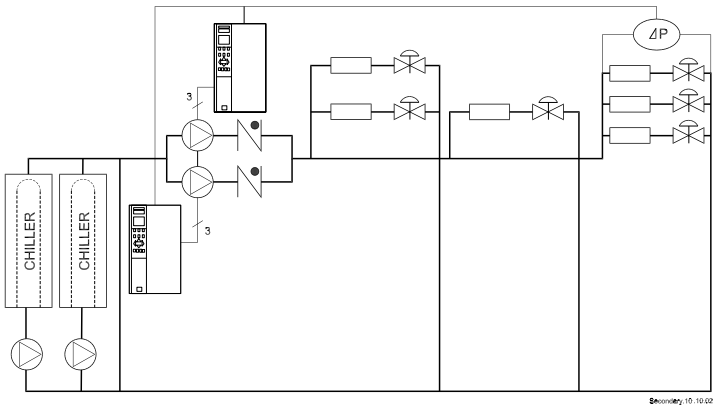

2.7. VLT HVAC Controls

2.7.1. Control Principle

An adjustable frequency drive rectifies AC voltage from line into DC voltage, after which DC voltage is converted into an AC current with a variable amplitude and frequency.

The motor is supplied with variable voltage / current and frequency, which enables infinitely variable speed control of three-phased, standard AC motors.

2.7.2. Control Structure

Control structure in open-loop and closed-loop configurations:

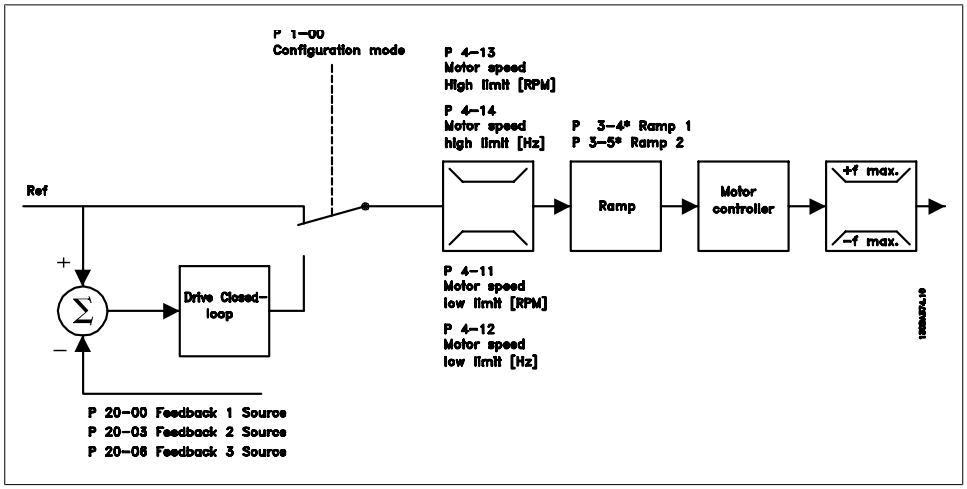

In the configuration shown in the illustration above, par. 1-00 is set to *Open-loop* [0]. The resulting reference from the reference handling system is received and fed through the ramp limitation and speed limitation before being sent to the motor control. The output of the motor control is then limited by the maximum frequency limit.

Select *Closed-loop* [3] in par. 1-00 to use the PID controller for closed-loop control of, e.g., flow, level or pressure in the controlled application. The PID parameters are located in par. group 20-**.

2.7.3. Local (Hand On) and Remote (Auto On) Control

The adjustable frequency drive can be operated manually via the local control panel (LCP) or remotely via analog and digital inputs and serial bus.
If allowed in par. 0-40, 0-41, 0-42, and 0-43, it is possible to start and stop the adjustable frequency drive via the LCP using the [Hand ON] and [Off] keys. Alarms can be reset via the [RESET] key. After pressing the [Hand On] key, the adjustable frequency drive goes into hand mode and follows (as default) the local reference set by using the LCP arrow keys.

2

After pressing the [Auto On] key, the adjustable frequency drive goes into auto mode and follows (as default) the remote reference. In this mode, it is possible to control the adjustable frequency drive via the digital inputs and various serial interfaces (RS-485, USB, or an optional serial communication bus). See more about starting, stopping, changing ramps and parameter set-ups, etc. in par. group 5-1* (digital inputs) or par. group 8-5* (serial communication).

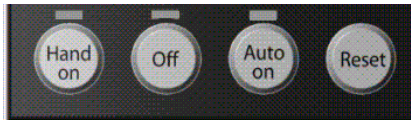

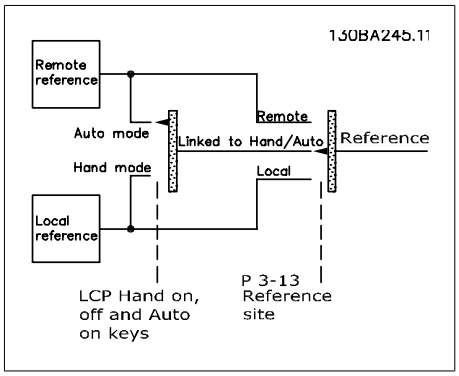

Active Reference and Configuration Mode

The active reference can be either the local reference or the remote reference.

In par. 3-13 *Reference Site,* the local reference can be permanently selected by selecting *Local* [2].
To permanently select the remote reference, select *Remote* [1]. By selecting *Linked to Hand/Auto* [0] (default), the reference site will depend on which mode is active. (Hand Mode or Auto Mode).

Hand Off Auto LCP Keys	**Reference Site Par. 3-13**	**Active Reference**
Hand	Linked to Hand/Auto	Local
Hand -> Off	Linked to Hand/Auto	Local
Auto	Linked to Hand/Auto	Remote
Auto -> Off	Linked to Hand/Auto	Remote
All keys	Local	Local
All keys	Remote	Remote

The table shows under which conditions either the local reference or the remote reference is active. One of them is always active, but both cannot be active at the same time.

Par. 1-00 *Configuration Mode* determines what kind of application control principle (i.e., open-loop or closed-loop) is used when the remote reference is active (see table above for the conditions).

Reference Handling - Local Reference

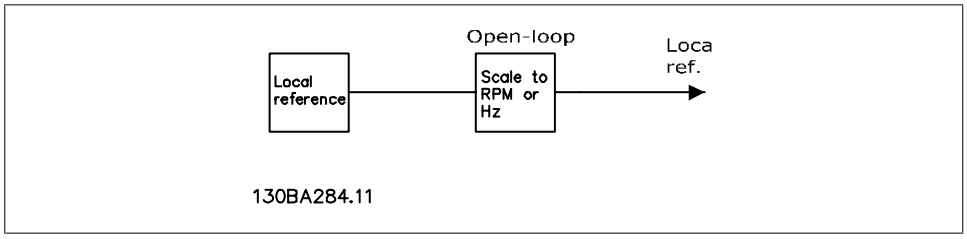

2.8. PID

2.8.1. Closed-loop (PID) Controller

The drive's closed-loop controller allows the drive to become an integral part of the controlled system. The drive receives a feedback signal from a sensor in the system. It then compares this feedback to a setpoint reference value and determines the error, if any, between these two signals. It then adjusts the speed of the motor to correct this error.

For example, consider a ventilation system where the speed of the supply fan is to be controlled so that the static pressure in the duct is constant. The desired static pressure value is supplied to the drive as the setpoint reference. A static pressure sensor measures the actual static pressure in the duct and supplies this to the drive as a feedback signal. If the feedback signal is greater than the setpoint reference, the drive will slow down to reduce the pressure. In a similar way, if the duct pressure is lower than the setpoint reference, the drive will automatically speed up to increase the pressure provided by the fan.

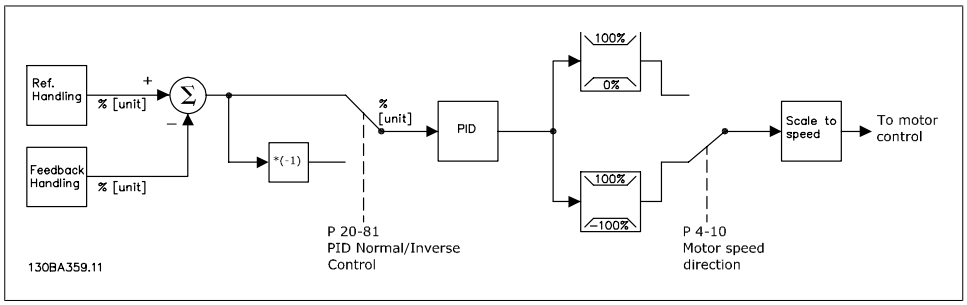

NOTE
While the default values for the drive's closed-loop controller will often provide satisfactory performance, the control of the system can often be optimized by adjusting some of the closed-loop controller's parameters.

The figure is a block diagram of the drive's closed-loop controller. The details of the reference handling block and feedback handling block are described in their respective sections below.

The following parameters are relevant for a simple PID control application:

Parameter		Description of function
Feedback 1 Source	par. 20-00	Select the source for Feedback 1. This is most commonly an analog input, but other sources are also available. Use the scaling of this input to provide the appropriate values for this signal. By default, Analog Input 54 is the default source for Feedback 1.
Reference/Feedback Unit	par 20-12	Select the unit for the setpoint referenceand feedback for the drive's closed-loop controller. Note: Because a conversion can be applied to the feedback signal before it is used by the closed-loop controller, the reference/feedback unit (par. 20-12) may not be the same as the feedback source unit (par. 20-02, 20-05 and 20-08).
PID Normal/Inverse Control	par. 20-81	Select *Normal* [0] if the motor's speed should decrease when the feedback is greater than the setpoint reference. Select *Inverse* [1] if the motor's speed should increase when the feedback is greater than the setpoint reference.
PID Proportional Gain	par. 20-93	This parameter adjusts the output of the drive's closed-loop control based on the error between the feedback and the setpoint reference. Quick controller response is obtained when this value is large. However, if a value that is too large is used, the drive's output frequency may become unstable.
PID Integral Time	par. 20-94	Over time, the integrator adds (integrates) the error between the feedback and the setpoint reference. This is required to ensure that the error approaches zero. Quick controller response is obtained when this value is small. However, if a value that is too small is used, the drive's output frequency may become unstable. A setting of 10,000 s disables the integrator.

This table summarizes the parameters that are needed to set up the drive's closed-loop controller when a single feedback signal with no conversion is compared to a single setpoint. This is the most common type of closed-loop controller.

2.8.2. Closed-loop Control Relevant Parameters

The drive's closed-loop controller is capable of handling more complex applications, such as situations where a conversion function is applied to the feedback signal or situations where multiple feedback signals and/or setpoint references are used. The table below summarizes the additional parameters that may be useful in such applications.

Parameter		Description of function
Feedback 2 Source Feedback 3 Source	par. 20-03 par. 20-06	Select the source, if any, for Feedback 2 or 3. This is most commonly a drive analog input, but other sources are also available. Par. 20-20 determines how multiple feedback signals will be processed by the drive's closed-loop controller. By default, these are set to *No function* [0].
Feedback 1 Conversion Feedback 2 Conversion Feedback 3 Conversion	par. 20-01 par. 20-04 par. 20-07	These are used to convert the feedback signal from one type to another, for example from pressure to flow or from pressure to temperature (for compressor applications). If *Pressure to temperature* [2] is selected, the refrigerant must be specified in par. Group 20-3*, Feedback Adv. Conv. By default, these are set to *Linear* [0].
Feedback 1 Source Unit Feedback 2 Source Unit Feedback 3 Source Unit	par. 20-02 par. 20-05 par. 20-08	Select the unit for a feedback source prior to any conversions. This is used for display purposes only. This parameter is only available when using *Pressure to Temperature* feedback conversion.
Feedback Function	par. 20-20	When multiple feedbacks or setpoints are used, this determines how they will be processed by the drive's closed-loop controller.
Setpoint 1 Setpoint 2 Setpoint 3	par. 20-21 par. 20-22 par. 20-23	These setpoints can be used to provide a setpoint reference to the drive's closed-loop controller. Par. 20-20 determines how multiple setpoint references will be processed. Any other references that are activated in par. group 3-1* will add to these values.
Refrigerant	par. 20-30	If any feedback conversion (par. 20-01, 20-04 or 20-07) is set to *Pressure to Temperature* [2], the refrigerant type must be selected here. If the refrigerant used is not listed here, select *User defined* [7] and specify the characteristics of the refrigerant in par. 20-31, 20-32 and 20-33.

2

Parameter		Description of function
Custom Refrigerant A1 Custom Refrigerant A2 Custom Refrigerant A3	par. 20-31 par. 20-32 par. 20-33	When par. 20-30 is set to *User defined* [7], these parameters are used to define the value of coefficients A1, A2 and A3 in the conversion equation: $Temperature = \frac{A2}{(ln(pressure + 1) - A1)} - A3$
PID Start Speed [RPM] PID Start Speed [Hz]	par. 20-82 par. 20-83	The parameter that is visible will depend on the setting of par. 0-02, Motor Speed Unit. In some applications, and after a start command, it is important to quickly ramp the motor up to a pre-determined speed before activating the drive's closed-loop controller. This parameter defines that starting speed.
On Reference Bandwidth	par. 20-84	This determines how close the feedback must be to the setpoint reference for the drive to indicate that the feedback is equal to the setpoint.
PID Anti Windup	par. 20-91	*On* [1] effectively disables the closed-loop controller's integral function when it is not possible to adjust the output frequency of the drive to correct the error. This allows the controller to respond more quickly once it can again control the system. *Off* [0] disables this function, making the integral function stay active continuously.
PID Differentiation Time	par. 20-95	This controls the output of the drive's closed-loop controller based on the rate of change of feedback. While this can provide fast controller response, such response is seldom needed in HVAC systems. The default value for this parameter is Off, or 0.00 s.
PID Diff. Gain Limit	par. 20-96	Because the differentiator responds to the rate of change of the feedback, a rapid change can cause a large, undesired change in the output of the controller. This is used to limit the maximum effect of the differentiator. This is not active when par. 20-95 is set to Off.
Low-pass Filter Time: Analog Input 53 Analog Input 54 Digital (pulse) input 29 Digital (pulse) input 33	par. 6-16 par. 6-26 par. 5-54 par. 5-59	This is used to filter out high frequency noise from the feedback signal. The value entered here is the time constant for the low-pass filter. The cut-off frequency in Hz can be calculated as follows: $F_{cut-off} = \frac{1}{2\pi T_{low-pass}}$ Variations in the feedback signal whose frequency is below $F_{cut-off}$ will be used by the drive's closed-loop controller, while variations at a higher frequency are considered to be noise and will be attenuated. Large values of Low-pass Filter Time will provide more filtering, but may cause the controller to not respond to actual variations in the feedback signal.

2.8.3. Example of Closed-loop PID Control

The following is an example of a closed-loop control for a ventilation system:

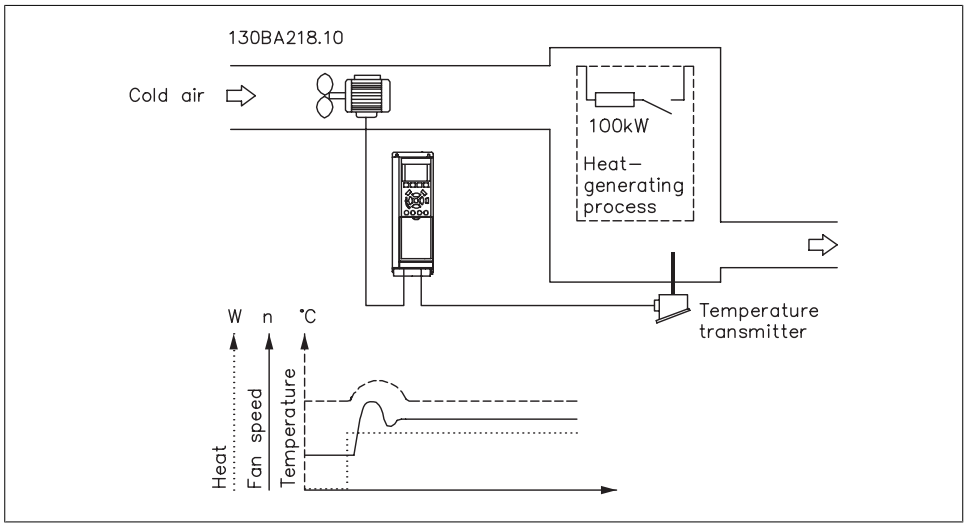

In a ventilation system, the temperature is to be maintained at a constant value. The desired temperature is set between 23° and 95° F [-5° and +35° C] using a 0-10 volt potentiometer. Because this is a cooling application, if the temperature is above the setpoint value, the speed of the fan must be increased to provide more cooling air flow. The temperature sensor has a range of 14° to 104° F [-10° to +40° C] and uses a two-wire transmitter to provide a 4-20 mA signal. The output frequency range of the drive is 10 to 50 Hz.

1. Start/Stop via switch connected between terminals 12 (+24 V) and 18.
2. Temperature reference via a potentiometer (23°- 95° F [-5° to +35° C], 0 10 V) connected to terminals 50 (+10 V), 53 (input) and 55 (common).
3. Temperature feedback via transmitter (14°-104° F [-10° - +40° C], 4-20 mA) connected to terminal 54. Switch S202 behind the local control panel set to ON (current input).

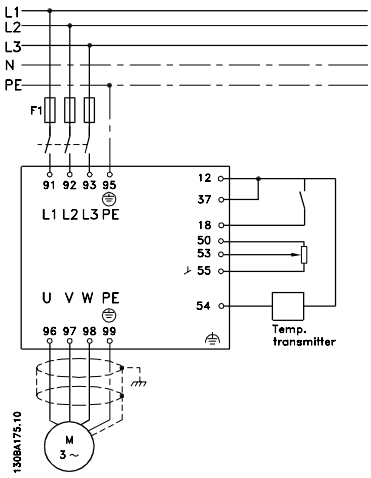

2

2.8.4. Programming Order

Function	Par. no.	Setting
1) Make sure the motor runs properly. Do the following:		
Set the drive to control the motor based on drive output frequency.	0-02	*Hz* [1]
Set the motor parameters using nameplate data.	1-2*	As specified by motor nameplate
Run Automatic Motor Adaptation.	1-29	*Enable complete AMA* [1] and then run the AMA function.
2) Make sure that the motor is running in the right direction.		
Pressing [Hand On] starts the motor at 5 Hz in forward direction, and the display shows: "Motor is running. Check if motor rotation direction is correct.		If motor rotation direction is incorrect, two motor phase cables should be interchanged.
3) Make sure the adjustable frequency drive limits are set to safe values.		
Make sure that the ramp settings are within the capabilities of the drive and the allowed application operating specifications.	3-41 3-42	60 sec. 60 sec. Depends on motor/load size! Also active in hand mode.
Prohibit the motor from reversing (if necessary)	4-10	*Clockwise* [0]
Set acceptable limits for the motor speed.	4-12 4-14 4-19	10 Hz 50 Hz 50 Hz
Switch from open-loop to closed-loop.	1-00	*Closed-loop* [3]
4) Configure the feedback to the PID controller.		
Set up Analog Input 54 as a feedback input.	20-00	*Analog input 54* [2] (default)
Select the appropriate reference/feedback unit.	20-12	*°C* [60]
5) Configure the setpoint reference for the PID controller.		
Set acceptable limits for the setpoint reference.	3-02 3-03	23°F [-5°C] 95°F [35°C]
Set up Analog Input 53 as Reference 1 Source.	3-15	*Analog input 53* [1] (default)
6) Scale the analog inputs used for setpoint reference and feedback.		
Scale Analog Input 53 for the temperature range of the potentiometer (23°-95°F [-5°-+35°C], 0-10 V).	6-10 6-11 6-14 6-15	0 V 10 V (default) 23°F [-5°C] 95°F [35°C]
Scale Analog Input 54 for the temperature range of the temperature sensor (-14° - +104°F [-10° - +40°C], 4-20 mA)	6-22 6-23 6-24 6-25	4 mA 20 mA (default) 14°F [-10°C] 104°F [40°C]
7) Tune the PID controller parameters.		
Select inverse control, because the motor's speed should increase when the feedback is greater than the setpoint reference.	20-81	*Inverse* [1]
Adjust the drive's closed-loop controller, if needed.	20-93 20-94	See Optimization of the PID Controller below.
8) Finished!		
Save the parameter settings to the LCP for safekeeping.	0-50	*All to LCP* [1]

2.8.5. Tuning the Drive Closed-loop Controller

Once the drive's closed-loop controller has been set up, the performance of the controller should be tested. In many cases, its performance may be acceptable using the default values of PID Proportional Gain (par. 20-93) and PID Integral Time (par. 20-94). However, in some cases it may be helpful to optimize these parameter values to provide faster system response while still controlling speed overshoot. In many situations, this can be done by following the procedure below:

1. Start the motor.
2. Set par. 20-93 (PID Proportional Gain) to 0.3 and increase it until the feedback signal begins to oscillate. If necessary, start and stop the drive, or make step changes in the setpoint reference to attempt to cause oscillation. Next, reduce the PID Proportional Gain until the feedback signal stabilizes. Then reduce the proportional gain by 40-60%.
3. Set par. 20-94 (PID Integral Time) to 20 sec. and reduce it until the feedback signal begins to oscillate. If necessary, start and stop the drive, or make step changes in the setpoint reference to attempt to cause oscillation. Next, increase the PID Integral Time until the feedback signal stabilizes. Then increase the Integral Time by 15-50%.
4. Par. 20-95 (PID Differentiation Time) should only be used for very fast-acting systems. The typical value is 25% of the PID Integral Time (par. 20-94). The differentiator should only be used when the setting of the proportional gain and the integral time has been fully optimized. Make sure that oscillations of the feedback signal are sufficiently dampened by the low-pass filter for the feedback signal (par 6 16, 6 26, 5 54 or 5 59, as required).

2.8.6. Ziegler Nichols Tuning Method

In general, the above procedure is sufficient for HVAC applications. However, other, more sophisticated procedures can also be used. The Ziegler Nichols tuning method is a technique that was developed in the 1940s and is still commonly used today. It generally provides acceptable control performance using a simple experiment and parameter calculation.

NOTE
This method must not be used on applications that could be damaged by oscillations created by marginally stable control settings.

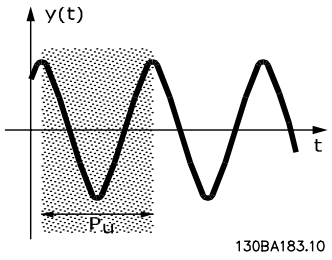

2.1: Marginally stable system

1. Select proportional control only. That is, PID Integral Time (par. 20-94) is set to Off (10,000 s), and the PID Differentiation Time (par. 20-95) is also set to Off (0 s in this case).
2. Increase the value of the PID Proportional Gain (par 20-93) until the point of instability is reached, as indicated by sustained oscillations of the feedback signal. The PID Proportional Gain that causes sustained oscillations is called the critical gain, K_u.
3. Measure the period of oscillation, P_u.
   NOTE: P_u should be measured when the amplitude of oscillation is relatively small. The output must not saturate (i.e., the maximum or minimum feedback signal must not be reached during the test).
4. Use the table below to calculate the necessary PID control parameters.

Type of Control	Proportional Gain	Integral Time	Differentiation Time
PI-control	0.45 * K_u	0.833 * P_u	-
PID tight control	0.6 * K_u	0.5 * P_u	0.125 * P_u
PID some overshoot	0.33 * K_u	0.5 * P_u	0.33 * P_u

Ziegler Nichols tuning for regulator, based on a stability boundary
Experience has shown that the control setting according to the Ziegler Nichols rule provides a good closed-loop response for many systems. If necessary, the operator can perform the final tuning of the control iteratively in order to modify the response of the control loop.

2.8.7. Reference Handling

A block diagram of how the drive produces the remote reference is shown below.

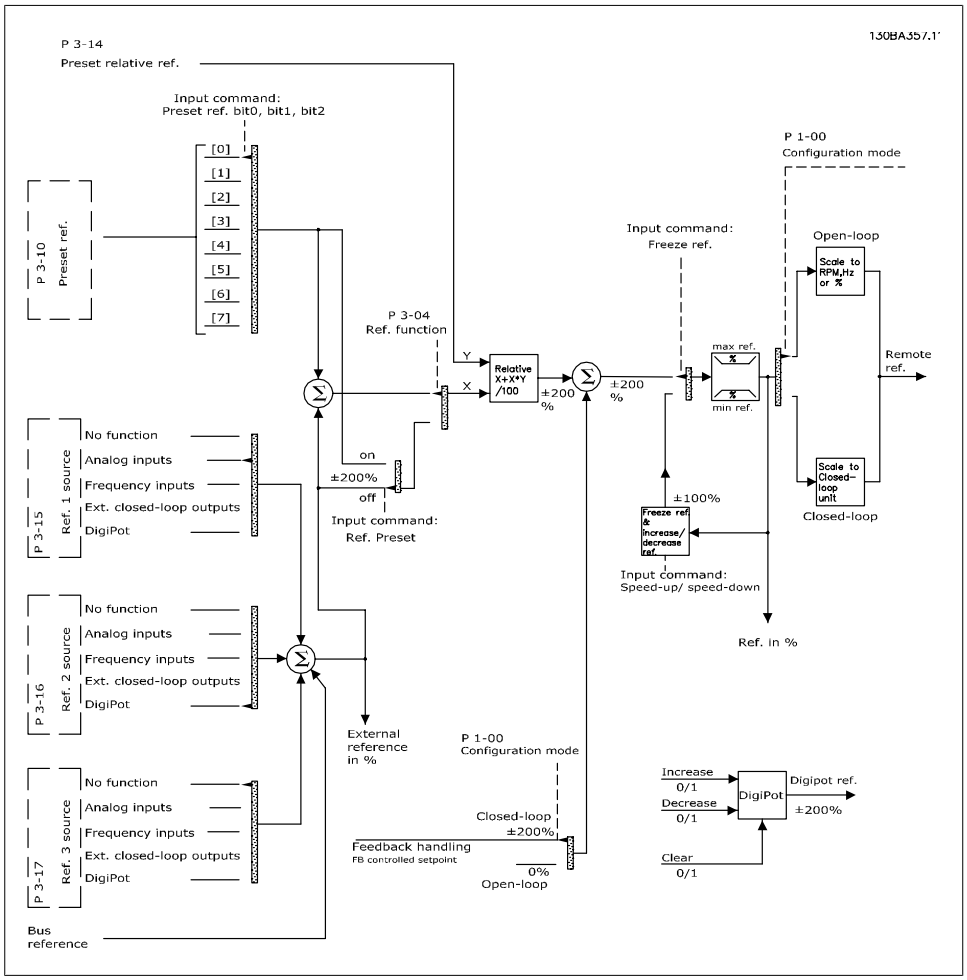

The Remote Reference is comprised of:

- Preset references.
- External references (analog inputs, pulse frequency inputs, digital potentiometer inputs and serial communication bus references).
- The preset relative reference.
- Feedback controlled setpoint.

Up to 8 preset references can be programmed in the drive. The active preset reference can be selected using digital inputs or the serial communications bus. The reference can also be supplied externally, most commonly from an analog input. This external source is selected by one of the 3 reference source parameters (par. 3-15, 3-16 and 3-17). Digipot is a digital potentiometer. This is also commonly called a speed up/slow control, or a floating point control. To set it up, one digital input is programmed to increase the reference, while another digital input is programmed to decrease the reference. A third digital input can be used to reset the digipot reference. All reference

2

resources and the bus reference are added to produce the total external reference. The external reference, the preset reference or the sum of the two can be selected to be the active reference. Finally, this reference can be scaled by using the preset relative reference (par. 3-14).

The scaled reference is calculated as follows:

$$Reference = X + X \times \left(\frac{Y}{100}\right)$$

Where X is the external reference, the preset reference or the sum of these, and Y is the preset relative reference (par. 3-14) in [%].

NOTE
If Y, the preset relative reference (par. 3-14), is set to 0%, the reference will not be affected by the scaling

2.8.8. Feedback Handling

A block diagram of how the drive processes the feedback signal is shown below.

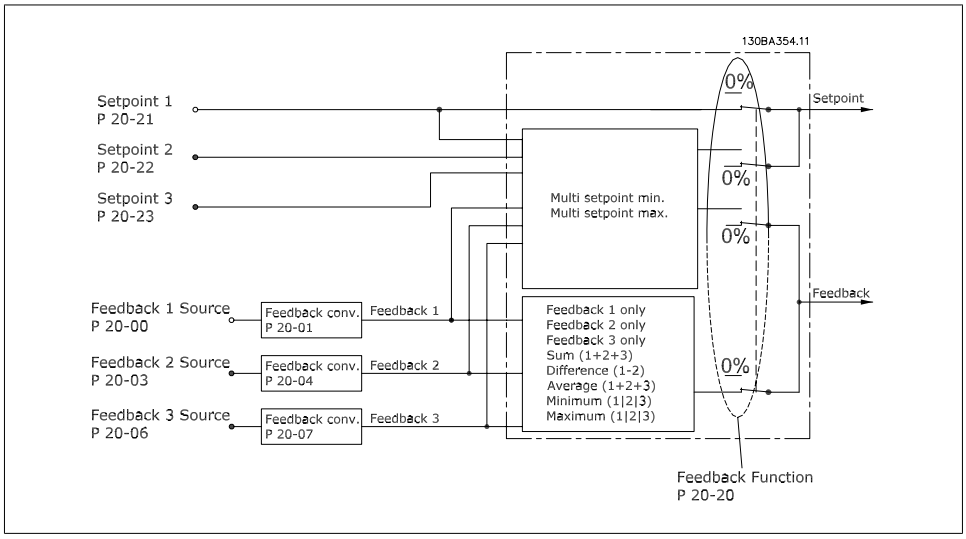

Feedback handling can be configured to work with applications requiring advanced control, such as multiple setpoints and multiple feedbacks. Three types of control are common.

Single Zone, Single Setpoint
Single Zone, Single Setpoint is a basic configuration. Setpoint 1 is added to any other reference (if any, see Reference Handling), and the feedback signal is selected using par. 20-20.

Multi-zone, Single Setpoint
Multi-zone, Single Setpoint uses two or three feedback sensors, but only one setpoint. The feedbacks can be added, subtracted (only feedback 1 and 2) or averaged. In addition, the maximum or minimum value may be used. Setpoint 1 is used exclusively in this configuration.

Multi-zone, Multi-setpoint
applies an individual setpoint reference to each feedback. The drive's closed-loop controller chooses one pair to control the drive based on the user's selection in par. 20-20. If *Multi-setpoint Max* [14] is selected, the setpoint/feedback pair with the smallest difference controls the drive's speed. (Note that a negative value is always smaller than a positive value).

If *Multi-setpoint Min* [13] is selected, the setpoint/feedback pair with the largest difference controls the speed of the drive. *Multi-setpoint Maximum* [14] attempts to keep all zones at or below their respective setpoints, while *Multi-setpoint Min* [13] attempts to keep all zones at or above their respective setpoints.

Example:
The setpoint of a two-zone, two-setpoint application, Zone 1, is 64° F [18° C], while the feedback is 66° F [19° C]. Zone 2 setpoint is 71° F [22° C] and the feedback is 68° F [20° C]. If *Multi-setpoint Max* [14] is selected, the setpoint and feedback of Zone 1 are sent to the PID controller, since this has the smaller difference (feedback is higher than setpoint, resulting in a negative difference). If *Multi-setpoint Max* [13] is selected, the setpoint and feedback of Zone 2 are sent to the PID controller, since this has the larger difference (feedback is lower than setpoint, resulting in a positive difference).

2.8.9. Feedback Conversion

In some applications, it may be useful to convert the feedback signal. One example of this is using a pressure signal to provide flow feedback. Since the square root of pressure is proportional to flow, the square root of the pressure signal yields a value proportional to the flow. This is shown below.

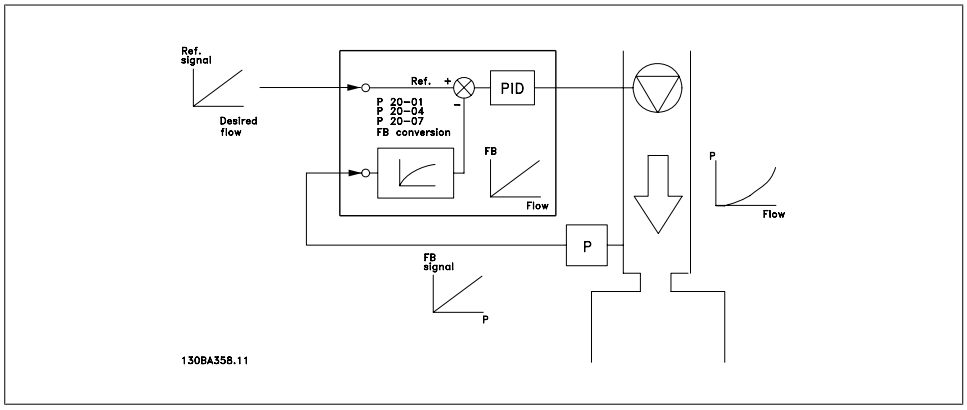

Another application that may benefit from feedback conversion is compressor control. In such applications, the output of a pressure sensor may be converted to the refrigerant temperature using the equation:

$$Temperature = \frac{A2}{(ln(pressure + 1) - A1)} - A3$$

where A1, A2 and A3 are refrigerant-specific constants.

2.9. General aspects of EMC

2

2.9.1. General Aspects of EMC Emissions

Electrical interference is usually conducted at frequencies in the range of 150 kHz to 30 MHz. Airborne interference from the drive system in the range of 30 MHz to 1 GHz is generated from the inverter, motor cable and motor.
As shown in the illustration below, capacitive currents in the motor cable coupled with a high dV/dt from the motor voltage generate leakage currents.
The use of a shielded motor cable increases the leakage current (see illustration below), because shielded cables have higher capacitance to ground than non-shielded cables. If the leakage current is not filtered, it will cause greater interference on the line power supply in the radio frequency range below approximately 5 MHz. Because the leakage current (I_1) is carried back to the unit through the shield (I_3), there will in principle only be a small electro-magnetic field (I_4) from the shielded motor cable according to the below figure.

The shield reduces the radiated interference, but increases the low-frequency interference in the line power supply. The motor cable shield must be connected to the adjustable frequency drive enclosure as well as on the motor enclosure. This is best done by using integrated shield clamps so as to avoid twisted shield ends (pigtails). These increase the shield impedance at higher frequencies, which reduces the shield effect and increases the leakage current (I_4).
If a shielded cable is used for the serial communication bus, relay, control cable, signal interface and brake, the shield must be mounted on the enclosure at both ends. In some situations, however, it will be necessary to break the shield to avoid current loops.

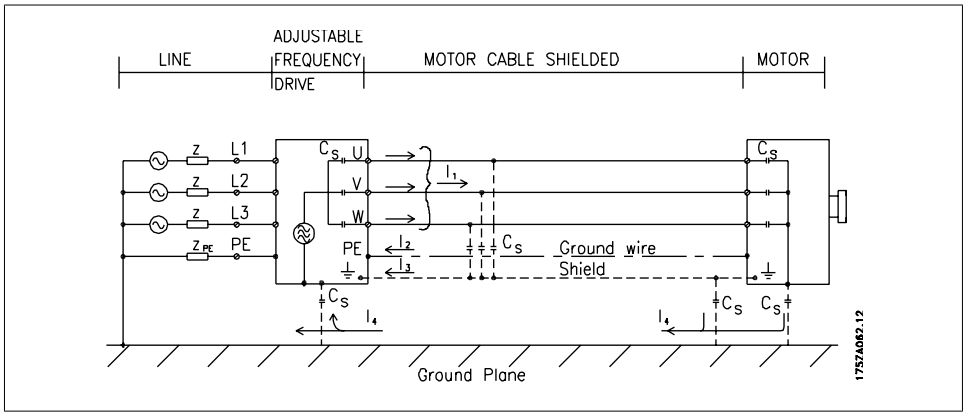

If the shield is to be placed on a mounting plate for the adjustable frequency drive, the mounting plate must be made of metal, because the shield currents have to be conveyed back to the unit. Moreover, ensure good electrical contact from the mounting plate through the mounting screws to the adjustable frequency driver chassis.

NOTE
When non-shielded cables are used, some emission requirements are not complied with, although the immunity requirements are observed.

In order to reduce the interference level from the entire system (unit + installation), make motor and brake cables as short as possible. Avoid placing cables with a sensitive signal level alongside motor and brake cables. Radio interference higher than 50 MHz (airborne) is especially generated by the control electronics.

2.9.2. EMC Test Results (Emission, Immunity)

The following test results were obtained using a system with an adjustable frequency drive (with options, if relevant), a shielded control cable, a control box with potentiometer, as well as a motor and motor-shielded cable.

RFI filter type	Conducted emission			Radiated emission	
	Industrial environment		Housing, trades, and light industries	Industrial environment	Housing, trades, and light industries
Set-up	EN 55011 Class A2	EN 55011 Class A1	EN 55011 Class B	EN 55011 Class A1	EN 55011 Class B
H1					
1.4-60 hp [1.1-45 kW] 200-240 V	492 ft [150 m]	492 ft [150 m] 1)	164 ft [50 m]	Yes	No
1.5-125 hp [1.1-90 kW] 380-480 V	492 ft [150 m]	492 ft [150 m]	164 ft [50 m]	Yes	No
H2					
1.5-5 hp [1.1-3.7 kW] 200-240 V	16 ft [5 m]	No	No	No	No
7.5-60 hp [5.5-45 kW] 200-240 V	82 ft [25 m]	No	No	No	No
1.5-10 hp [1.1-7.5 kW] 380-480 V	16 ft [5 m]	No	No	No	No
15-125 hp [11-90 kW] 380-480 V	82 ft [25 m]	No	No	No	No
150-600 hp [110-450 kW] 380-480	164 ft [50 m]	No	No	No	No
100-670 hp [75-500 kW] 525-600 V	492 ft [150 m]	No	No	No	No
H3					
1.4-60 hp [1.1-45 kW] 200-240 V	75 m	50 m 1)	10 m	Yes	No
1.5-125 hp [1.1-90 kW] 380-480 V	75 m	164 ft [50 m]	10 m	Yes	No
H4					
150-600 hp [110-450 kW] 380-480	492 ft [150 m]	45 m	No	Yes	No
100-450 hp [75-315 kW] 525-600 V	492 ft [150 m]	98 ft [30 m]	No	No	No
Hx					
1.5-10 hp [1.1-7.5 kW] 525-600 V	-	-	-	-	-

2.1: EMC Test Results (Emission, Immunity)

1) 15 hp [11 kW] 200 V, H1 and H2 performance is delivered in enclosure type B1.
15 hp [11 kW] 200 V, H3 performance is delivered in enclosure type B2.

2.9.3. Required Compliance Levels

Standard / environment	Housing, trades, and light industries		Industrial environment	
	Conducted	Radiated	Conducted	Radiated
IEC 61000-6-3 (generic)	Class B	Class B		
IEC 61000-6-4			Class A1	Class A1
EN 61800-3 (restricted)	Class A1	Class A1	Class A1	Class A1
EN 61800-3 (unrestricted)	Class B	Class B	Class A2	Class A2

EN 55011:	Threshold values and measuring methods for radio interference from industrial, scientific and medical (ISM) high-frequency equipment.
Class A1:	Equipment used in a public supply network. Restricted distribution.
Class A2:	Equipment used in a public supply network.
Class B1:	Equipment used in areas with a public supply network (residential, commerce, and light industries). Unrestricted distribution.

2.9.4. EMC Immunity

In order to document immunity against interference from electrical phenomena, the following immunity tests have been performed on a system consisting of an adjustable frequency drive (with options, if relevant), a shielded control cable and a control box with potentiometer, motor cable and motor.

The tests were performed in accordance with the following basic standards:

- **EN 61000-4-2 (IEC 61000-4-2):** Electrostatic discharges (ESD): Simulation of electrostatic discharges from human beings.
- **EN 61000-4-3 (IEC 61000-4-3):** Incoming electromagnetic field radiation, amplitude modulated Simulation of the effects of radar and radio communication equipment, as well as mobile communications.
- **EN 61000-4-4 (IEC 61000-4-4):** Electrical interference: Simulation of interference brought about by switching with a contactor, relays or similar devices.
- **EN 61000-4-5 (IEC 61000-4-5):** Surge transients: Simulation of transients brought about by lightning that strikes near installations (e.g.).
- **EN 61000-4-6 (IEC 61000-4-6):** RF Common mode: Simulation of the effect from radio-transmitting equipment connected to cables.

See following EMC immunity form.

VLT HVAC; 200-240 V, 380-480 V

Basic standard	Burst IEC 61000-4-4	Surge IEC 61000-4-5	ESD IEC 61000-4-2	Radiated electromagnetic field IEC 61000-4-3	RF common mode voltage IEC 61000-4-6
Acceptance criterion	B	B	B	A	A
Line	4 kV CM	2 kV/2 Ω DM 4 kV/12 Ω CM	—	—	10 V_{RMS}
Motor	4 kV CM	4 kV/2 Ω[1)]	—	—	10 V_{RMS}
Brake	4 kV CM	4 kV/2 Ω[1)]	—	—	10 V_{RMS}
Load sharing	4 kV CM	4 kV/2 Ω[1)]	—	—	10 V_{RMS}
Control wires	2 kV CM	2 kV/2 Ω[1)]	—	—	10 V_{RMS}
Standard bus	2 kV CM	2 kV/2 Ω[1)]	—	—	10 V_{RMS}
Relay wires	2 kV CM	2 kV/2 Ω[1)]	—	—	10 V_{RMS}
Application and serial communication options	2 kV CM	2 kV/2 Ω[1)]	—	—	10 V_{RMS}
LCP cable	2 kV CM	2 kV/2 Ω[1)]	—	—	10 V_{RMS}
External 24 V DC	2 kV CM	0.5 kV/2 Ω DM 1 kV/12 Ω CM	—	—	10 V_{RMS}
Enclosure	—	—	8 kV AD 6 kV CD	10 V/m	—

AD: Air Discharge
CD: Contact Discharge
CM: Common mode
DM: Differential mode
1) Injection on cable shield

2.2: Immunity

2.10. Galvanic isolation (PELV)

PELV offers protection by way of extra low voltage. Protection against electric shock is ensured when the electrical supply is of the PELV type and the installation is made as described in local/national regulations on PELV supplies.

All control terminals and relay terminals 01-03/04-06 comply with PELV (Protective Extra Low Voltage - does not apply to 525-600 V units and at grounded Delta leg above 300 V).

Galvanic (ensured) isolation is obtained by fulfilling requirements for higher isolation and by providing the relevant creepage/clearance distances. These requirements are described in the EN 61800-5-1 standard.

The components that make up the electrical isolation, as described below, also comply with the requirements for higher isolation and the relevant test as described in EN 61800-5-1.
The PELV galvanic isolation can be shown in six locations (see illustration):

In order to maintain PELV, all connections made to the control terminals must be PELV. For example, the thermistor must be reinforced/double insulated.

1. Power supply (SMPS) incl. signal isolation of U_{DC}, indicating the intermediate current voltage.
2. Gate drive that runs the IGBTs (trigger transformers/opto-couplers).
3. Current transducers.
4. Opto-coupler, brake module.
5. Internal soft-charge, RFI and temperature measurement circuits.
6. Custom relays.

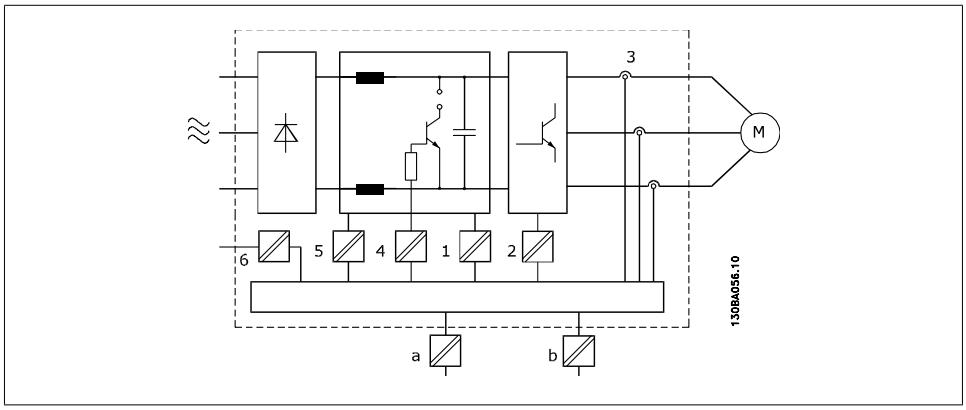

2.2: Galvanic isolation

The functional galvanic isolation (a and b in drawing) is for the 24 V backup option and for the RS-485 standard bus interface.

At altitudes higher than 6,600 feet [2 km], please contact Danfoss Drives regarding PELV.

2.11. Ground leakage current

Warning:
Touching the electrical parts may be fatal - even after the equipment has been disconnected from line power.
Make sure that other voltage inputs have been disconnected, such as load-sharing (linkage of DC intermediate circuit), as well as the motor connection for kinetic back-up.
Before touching any electrical parts, wait at least: Please consult the section *Safety> Caution*.
Shorter time than stated in the table is allowed only if indicated on the nameplate for the specific unit.

Leakage Current
The ground leakage current from the adjustable frequency drive exceeds 3.5 mA. To ensure that the ground cable has a good mechanical connection to the ground connection (terminal 95), the cable cross-section must be at least 0.016 in.^{2} [10 mm^2] or have 2 rated ground wires terminated separately.
Residual Current Device
This product can cause DC current in the protective conductor. Where a residual current device (RCD) is used for extra protection, only an RCD of Type B (time delayed) shall be used on the supply side of this product. See also RCD Application Note MN.90.Gx.yy.
Protective grounding of the adjustable frequency drive and the use of RCDs must always follow national and local regulations.

2.12. Control with brake function

2.12.1. Selection of Brake Resistor

In certain applications, such as in tunnels or underground railway station ventilation systems, it is desirable to bring the motor to a stop more rapidly than can be achieved through controlling via ramp-down or free-wheeling. In such applications, dynamic braking with a braking resistor may be utilized. Using a braking resistor ensures that the energy is absorbed in the resistor and not in the adjustable frequency drive.

If the amount of kinetic energy transferred to the resistor in each braking period is not known, the average power can be calculated on the basis of the cycle time and braking time, also known as the intermitted duty cycle. The resistor intermittent duty cycle is an indication of the duty cycle at which the resistor is active. The figure below shows a typical braking cycle.

The intermittent duty cycle for the resistor is calculated as follows:

Duty Cycle = t_b / T

T = cycle time in seconds
t_b is the braking time in seconds (as part of the total cycle time)

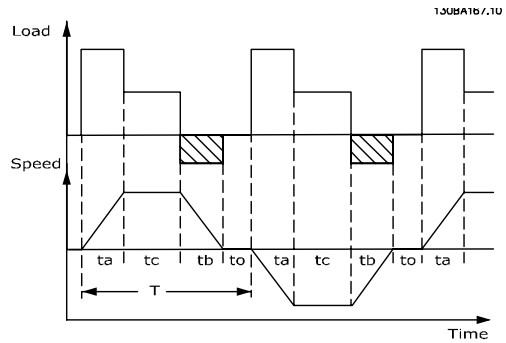

Danfoss offers brake resistors with duty cycle of 5%, 10% and 40% suitable for use with the VLT® FC102 HVAC drive series. If a 10% duty cycle resistor is applied, it is capable of absorbing braking energy up to 10% of the cycle time, with the remaining 90% being used to dissipate heat from the resistor.

For further selection advice, please contact Danfoss.

NOTE
If a short circuit in the brake transistor occurs, power dissipation in the brake resistor is only prevented by using a line switch or contactor to disconnect the AC line for the adjustable frequency drive. (The contactor can be controlled by the adjustable frequency drive).

2.12.2. Brake Resistor Calculation

The brake resistance is calculated as shown:

$$R_{br}\ [\Omega] = \frac{U_{dc}^2}{P_{peak}}$$

where

$P_{peak} = P_{motor} \times M_{br} \times \eta_{motor} \times \eta_{VLT}$[W]

As can be seen, the brake resistance depends on the intermediate circuit voltage (U_{DC}).
The brake function of the adjustable frequency drive is settled in 3 areas of the line power supply:

Size	Brake active	Warning before cut out	Cut out (trip)
3 x 200-240 V	390 V (U_{DC})	405 V	410 V
3 x 380-480 V	778 V	810 V	820 V
3 x 525-600 V	943 V	965 V	975 V

NOTE
Make sure that the brake resistor can cope with a voltage of 410 V, 820 V or 975 V - unless Danfoss brake resistors are used.

Danfoss recommends the brake resistance R_{rec}, i.e., one that guarantees that the adjustable frequency drive is able to brake at the highest braking torque ($M_{br(\%)}$) of 110%. The formula can be written as:

$$R_{rec}\ [\Omega] = \frac{U_{dc}^2 \ x\ 100}{P_{motor}\ x\ M_{br}\ (\%)\ x\ \eta_{VLT}\ x\ \eta_{motor}}$$

η_{motor} is typically at 0.90
η_{VLT} is typically at 0.98

For 200 V, 480 V and 600 V adjustable frequency drives, R_{rec} at 160% braking torque is written as:

$$200V\ :\ R_{rec} = \frac{107780}{P_{motor}}\ [\Omega]$$

MG.11.B5.22 - VLT® is a registered Danfoss trademark.

$$480V : R_{rec} = \frac{375300}{P_{motor}} [\Omega] \text{ 1)}$$

$$480V : R_{rec} = \frac{428914}{P_{motor}} [\Omega] \text{ 2)}$$

$$600V : R_{rec} = \frac{630137}{P_{motor}} [\Omega]$$

1) For adjustable frequency drives ≤ 10 hp [7.5 kW) shaft output
2) For adjustable frequency drives > 10 hp [7.5 kW] shaft output

NOTE
The resistor brake circuit resistance selected should not be higher than that recommended by Danfoss. If a brake resistor with a higher ohmic value is selected, the braking torque may not be achieved because there is a risk that the adjustable frequency drive cuts out for safety reasons.

NOTE
If a short circuit in the brake transistor occurs, power dissipation in the brake resistor is only prevented by using a line switch or contactor to disconnect the AC line for the adjustable frequency drive. (The contactor can be controlled by the adjustable frequency drive).

NOTE
Do not touch the brake resistor, as it can get very hot during/after braking.

2.12.3. Control with Brake Function

The brake is to limit the voltage in the intermediate circuit when the motor acts as a generator. This occurs, for example, when the load drives the motor and the power accumulates on the DC link. The brake is built up as a chopper circuit with the connection of an external brake resistor.

Placing the brake resistor externally offers the following advantages:

- The brake resistor can be selected on the basis of the application in question.
- The braking energy can be dissipated outside the control panel, i.e., where the energy can be utilized.
- The electronics of the adjustable frequency drive will not overheat if the brake resistor is overloaded.

The brake is protected against short-circuiting of the brake resistor, and the brake transistor is monitored to ensure that short-circuiting of the transistor is detected. A relay/digital output can be used for protecting the brake resistor against overloading in connection with a fault in the adjustable frequency drive.
In addition, the brake makes it possible to read out the momentary power and the mean power for the last 120 seconds. The brake can also monitor the power energizing and ensure that it does not exceed a limit set in par. 2-12. In par. 2-13, select the function to carry out when the power transmitted to the brake resistor exceeds the limit set in par. 2-12.

NOTE
Monitoring the braking energy is not a safety function; a thermal switch is required for that purpose. The brake resistor circuit is not protected against ground leakage.

Overvoltage control (OVC) (exclusive brake resistor) can be selected as an alternative brake function in par. 2-17. This function is active for all units. The function ensures that a trip can be avoided if the DC link voltage increases. This is done by increasing the output frequency to limit the voltage from the DC link. It is a very useful function if, for example, the ramp-down time is too short because tripping the adjustable frequency drive is avoided. In this situation, the ramp-down time is extended.

2.13. Mechanical brake control

2.13.1. Brake Resistor Cabling

EMC (twisted cables/shielding)
To reduce the electrical noise from the wires between the brake resistor and the adjustable frequency drive, the wires must be twisted.

For enhanced EMC performance, a metal shield can be used.

2.14. Extreme running conditions

Short Circuit (Motor Phase – Phase)
The adjustable frequency drive is protected against short circuits by means of current measurement in each of the three motor phases or in the DC link. A short circuit between two output phases will cause an overcurrent in the inverter. The inverter will be turned off individually when the short circuit current exceeds the permitted value (Alarm 16 Trip Lock).
To protect the drive against a short circuit at the load sharing and brake outputs, please see the design guidelines.

Switching on the Output
Switching on the output between the motor and the adjustable frequency drive is fully permitted. You cannot damage the adjustable frequency drive in any way by switching on the output. However, fault messages may appear.

Motor-generated Overvoltage
The voltage in the intermediate circuit is increased when the motor acts as a generator. This occurs in the following cases:

1. The load drives the motor (at constant output frequency from the adjustable frequency drive), i.e., the load generates energy.
2. During deceleration ("ramp-down"), if the moment of inertia is high the friction is low and the ramp-down time is too short for the energy to be dissipated as a loss in the adjustable frequency drive, the motor and the installation.
3. Incorrect slip compensation setting may cause higher DC link voltage.

The control unit may attempt to correct the ramp if possible (par. 2-17 *Overvoltage Control*.
The inverter turns off to protect the transistors and the intermediate circuit capacitors when a certain voltage level is reached.
See par. 2-10 and par. 2-17 to select the method used for controlling the intermediate circuit voltage level.

Line Drop-out
During a line drop-out, the adjustable frequency drive keeps running until the intermediate circuit voltage drops below the minimum stop level, which is typically 15% below the adjustable frequency drive's lowest rated supply voltage.

The line voltage before the drop-out and the motor load determine how long it takes for the inverter to coast.

Static Overload in VVCplus mode
When the adjustable frequency drive is overloaded (the torque limit in par. 4-16/4-17 is reached), the control reduces the output frequency to reduce the load.
If the overload is excessive, a current may occur that makes the adjustable frequency drive cut out after approximately 5-10 s.

Operation within the torque limit is limited in time (0-60 s) in par. 14-25.

2.14.1. Motor Thermal Protection

The motor temperature is calculated on the basis of motor current, output frequency, and time or thermistor. See par. 1-90 in the Programming Guide.

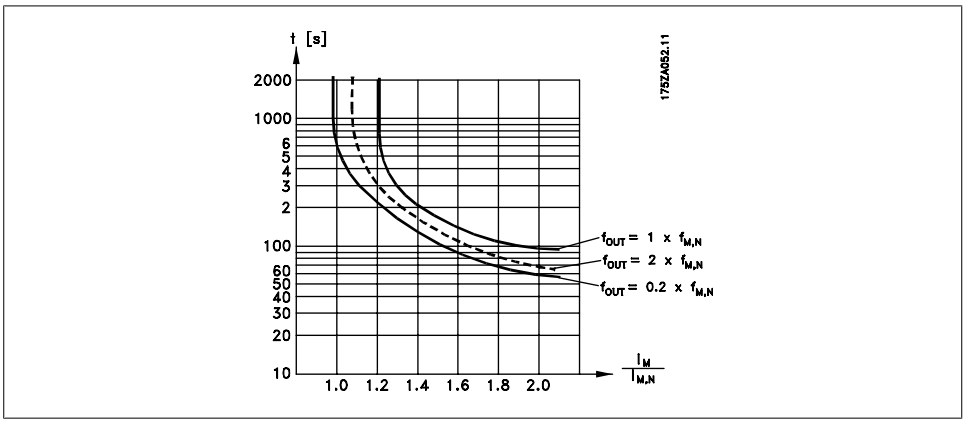

2.15. Safe Stop

2.15.1. Safe Stop

The adjustable frequency drive can perform the safety function *Safe Torque Off* (As defined by draft CD IEC 61800-5-2) or *Stop Category 0* (as defined in EN 60204-1).

It is designed and deemed suitable for the requirements of Safety Category 3 in EN 954-1. This function is called safe stop. Prior to integrating and using safe stop in an installation, a thorough risk analysis must be carried out on the installation in order to determine whether the safe stop functionality and safety category are appropriate and sufficient. In order to install and use the safe stop function in accordance with the requirements of Safety Category 3 in EN 954-1, the related information and instructions in the relevant Design Guide must be followed! The information and instructions contained in the Instruction Manual are not sufficient for a correct and safe use of the safe stop functionality!

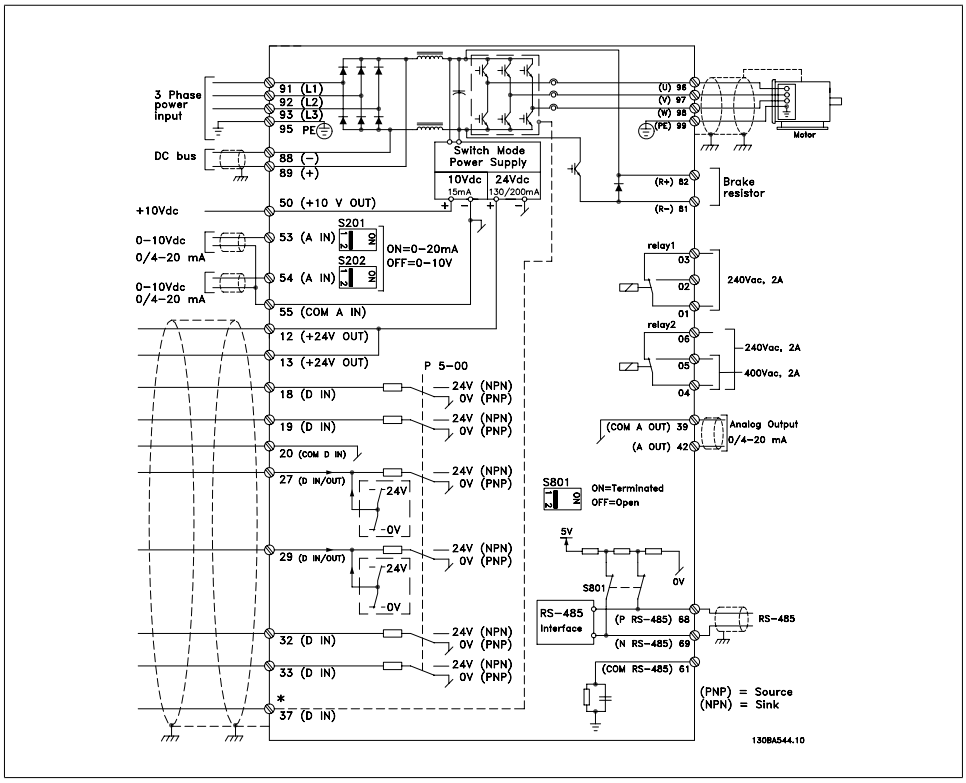

2.3: Diagram showing all electrical terminals. (Terminal 37 present for units with safe stop function only.)

2.15.2. Safe Stop Installation

To carry out an installation of a Category 0 Stop (EN60204) in conformity with Safety Category 3 (EN954-1), follow these instructions:

1. The bridge (jumper) between Terminal 37 and 24 V DC must be removed. Cutting or breaking the jumper is not sufficient. Remove it entirely to avoid short-circuiting. See jumper on illustration.
2. Connect terminal 37 to 24 V DC by a short circuit-protected cable. The 24 V DC voltage supply must be interruptible by an EN954-1 category 3 circuit interrupt device. If the interrupt device and the adjustable frequency drive are placed in the same installation panel, you can use an unshielded cable instead of a shielded one.

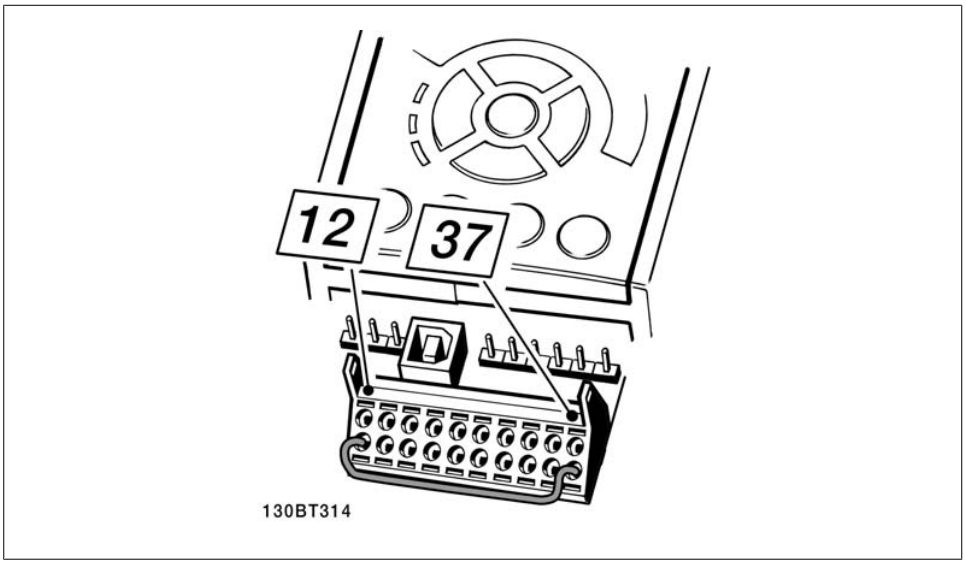

2.4: Bridge jumper between terminal 37 and 24 VDC

The illustration below shows a Stopping Category 0 (EN 60204-1) with safety Category 3 (EN 954-1). The circuit interruption is caused by an opening door contact. The illustration also shows how to connect a non-safety-related hardware coast.

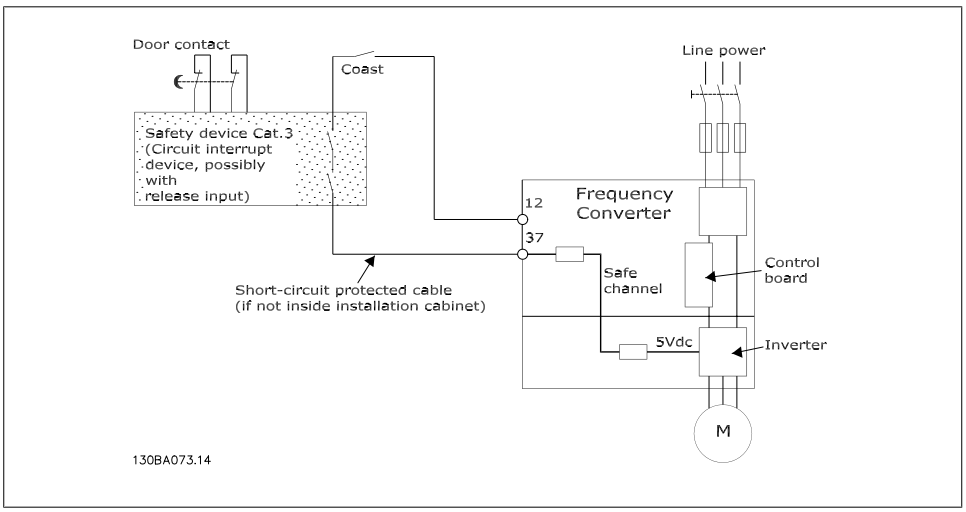

2.5: Illustration of the essential aspects of an installation to achieve a Stopping Category 0 (EN 60204-1) with safety Category 3 (EN 954-1).

3

3. VLT HVAC Selection

3.1. Specifications

3.1.1. Line Supply 3 x 200-240 V AC

Normal overload 110% for 1 minute						
IP 20		A2	A2	A2	A3	A3
IP 21		A2	A2	A2	A3	A3
IP 55		A5	A5	A5	A5	A5
IP 66		A5	A5	A5	A5	A5
Line supply 200-240 V AC						
Adjustable frequency drive		P1K1	P1K5	P2K2	P3K0	P3K7
Typical Shaft Output [kW]		1.1	1.5	2.2	3	3.7
Typical Shaft Output [HP] at 208 V		1.5	2.0	2.9	4.0	4.9
Output current						
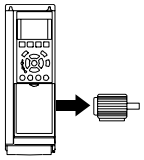	Continuous (3 x 200-240 V) [A]	6.6	7.5	10.6	12.5	16.7
	Intermittent (3 x 200-240 V) [A]	7.3	8.3	11.7	13.8	18.4
	Continuous kVA (208 V AC) [kVA]	2.38	2.70	3.82	4.50	6.00
	Max. cable size: (line, motor, brake) [mm^2 /AWG] 2)			4/10		
Max. input current						
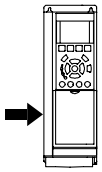	Continuous (3 x 200-240 V) [A]	5.9	6.8	9.5	11.3	15.0
	Intermittent (3 x 200-240 V) [A]	6.5	7.5	10.5	12.4	16.5
	Max. pre-fuses1) [A]	20	20	20	32	32
	Environment					
	Estimated power loss at rated max. load [W] 4)	63	82	116	155	185
	Weight enclosure IP 20 [kg]	4.9	4.9	4.9	6.6	6.6
	Weight enclosure IP 21 [kg]	5.5	5.5	5.5	7.5	7.5
	Weight enclosure IP 55 [kg]	13.5	13.5	13.5	13.5	13.5
	Weight enclosure IP 66 [kg]	13.5	13.5	13.5	13.5	13.5
	Efficiency 3)	0.96	0.96	0.96	0.96	0.96

3

Normal overload 110% for 1 minute					
IP 21		B1	B1	B1	B2
IP 55		B1	B1	B1	B2
IP 66		B1	B1	B1	B2
Line supply 200-240 V AC					
Adjustable frequency drive		P5K5	P7K5	P11K	P15K
Typical Shaft Output [kW]		5.5	7.5	11	15
Typical Shaft Output [HP] at 208 V		7.5	10	15	20
Output current					
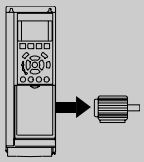	Continuous (3 x 200-240 V) [A]	24.2	30.8	46.2	59.4
	Intermittent (3 x 200-240 V) [A]	26.6	33.9	50.8	65.3
	Continuous kVA (208 V AC) [kVA]	8.7	11.1	16.6	21.4
	Max. cable size: (line, motor, brake) [mm² /AWG] 2)		10/7		35/2
Max. input current					
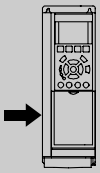	Continuous (3 x 200-240 V) [A]	22.0	28.0	42.0	54.0
	Intermittent (3 x 200-240 V) [A]	24.2	30.8	46.2	59.4
	Max. pre-fuses1) [A]	63	63	63	80
	Environment				
	Estimated power loss at rated max. load [W] 4)	269	310	447	602
	Weight enclosure IP 20 [kg]				
	Weight enclosure IP 21 [kg]	23	23	23	27
	Weight enclosure IP 55 [kg]	23	23	23	27
	Weight enclosure IP 66 [kg]	23	23	23	27
	Efficiency 3)	0.96	0.96	0.96	0.96

Normal overload 110% for 1 minute						
IP 20						
IP 21		C1	C1	C1	C2	C2
IP 55		C1	C1	C1	C2	C2
IP 66		C1	C1	C1	C2	C2
Line supply 200-240 V AC						
Adjustable frequency drive		P18K	P22K	P30K	P37K	P45K
Typical Shaft Output [kW]		18.5	22	30	37	45
Typical Shaft Output [HP] at 208 V		25	30	40	50	60
Output current						
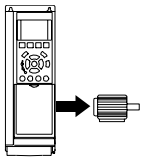	Continuous (3 x 200-240 V) [A]	74.8	88.0	115	143	170
	Intermittent (3 x 200-240 V) [A]	82.3	96.8	127	157	187
	Continuous kVA (208 V AC) [kVA]	26.9	31.7	41.4	51.5	61.2
	Max. cable size:					
	(line, motor, brake) [mm^2 /AWG] 2)	50/1/0			95/4/0	120/250 MCM
Max. input current						
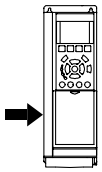	Continuous (3 x 200-240 V) [A]	68.0	80.0	104.0	130.0	154.0
	Intermittent (3 x 200-240 V) [A]	74.8	88.0	114.0	143.0	169.0
	Max. pre-fuses1) [A]	125	125	160	200	250
	Environment					
	Estimated power loss at rated max. load [W] 4)	737	845	1140	1353	1636
	Weight enclosure IP 20 [kg]					
	Weight enclosure IP 21 [kg]	45	45	65	65	65
	Weight enclosure IP 55 [kg]	45	45	65	65	65
	Weight enclosure IP 66 [kg]	45	45	65	65	65
	Efficiency 3)	0.96	0.97	0.97	0.97	0.97

3

3.1.2. Line Supply 3 x 380-480 V AC

Normal overload 110% for 1 minute								
Adjustable frequency drive Typical Shaft Output [kW]		P1K1 1.1	P1K5 1.5	P2K2 2.2	P3K0 3	P4K0 4	P5K5 5.5	P7K5 7.5
Typical Shaft Output [HP] at 460 V		1.5	2.0	2.9	4.0	5.3	7.5	10
IP 20		A2	A2	A2	A2	A2	A3	A3
IP 21								
IP 55		A5	A5	A5	A5	A5	A5	A5
IP 66		A5	A5	A5	A5	A5	A5	A5
Output current								
	Continuous (3 x 380-440 V) [A]	3	4.1	5.6	7.2	10	13	16
	Intermittent (3 x 380-440 V) [A]	3.3	4.5	6.2	7.9	11	14.3	17.6
	Continuous (3 x 440-480 V) [A]	2.7	3.4	4.8	6.3	8.2	11	14.5
	Intermittent (3 x 440-480 V) [A]	3.0	3.7	5.3	6.9	9.0	12.1	15.4
	Continuous kVA (400 V AC) [kVA]	2.1	2.8	3.9	5.0	6.9	9.0	11.0
	Continuous kVA (460 V AC) [kVA]	2.4	2.7	3.8	5.0	6.5	8.8	11.6
	Max. cable size: (line, motor, brake) [[mm²/ AWG] [2)]				4/ 10			
Max. input current								
	Continuous (3 x 380-440 V) [A]	2.7	3.7	5.0	6.5	9.0	11.7	14.4
	Intermittent (3 x 380-440 V) [A]	3.0	4.1	5.5	7.2	9.9	12.9	15.8
	Continuous (3 x 440-480 V) [A]	2.7	3.1	4.3	5.7	7.4	9.9	13.0
	Intermittent (3 x 440-480 V) [A]	3.0	3.4	4.7	6.3	8.1	10.9	14.3
	Max. pre-fuses[1)][A]	10	10	20	20	20	32	32
	Environment							
	Estimated power loss at rated max. load [W] [4)]	58	62	88	116	124	187	255
	Weight enclosure IP 20 [kg]	4.8	4.9	4.9	4.9	4.9	6.6	6.6
	Weight enclosure IP 21 [kg]							
	Weight enclosure IP 55 [kg]	13.5	13.5	13.5	13.5	13.5	14.2	14.2
	Weight enclosure IP 66 [kg]	13.5	13.5	13.5	13.5	13.5	14.2	14.2
	Efficiency [3)]	0.96	0.97	0.97	0.97	0.97	0.97	0.97

Normal overload 110% for 1 minute

Adjustable frequency drive Typical Shaft Output [kW]	P11K 11	P15K 15	P18K 18.5	P22K 22	P30K 30	P37K 37	P45K 45	P55K 55	P75K 75	P90K 90
Typical Shaft Output [HP] at 460 V	15	20	25	30	40	50	60	75	100	125
IP 20										
IP 21	B1	B1	B1	B2	B2	C1	C1	C1	C2	C2
IP 55	B1	B1	B1	B2	B2	C1	C1	C1	C2	-
IP 66	B1	B1	B1	B2	B2	C1	C1	C1	C2	-
Output current										
Continuous (3 x 380-440 V) [A]	24	32	37.5	44	61	73	90	106	147	177
Intermittent (3 x 380-440 V) [A]	26.4	35.2	41.3	48.4	67.1	80.3	99	117	162	195
Continuous (3 x 440-480 V) [A]	21	27	34	40	52	65	80	105	130	160
Intermittent (3 x 440-480 V) [A]	23.1	29.7	37.4	44	61.6	71.5	88	116	143	176
Continuous kVA (400 V AC) [kVA]	16.6	22.2	26	30.5	42.3	50.6	62.4	73.4	102	123
Continuous kVA (460 V AC) [kVA]	16.7	21.5	27.1	31.9	41.4	51.8	63.7	83.7	104	128
Max. cable size: (line, motor, brake) [[mm²/ AWG] 2)	10/7			35/2		50/1/0			104	128
Max. input current										
Continuous (3 x 380-440 V) [A]	22	29	34	40	55	66	82	96	133	161
Intermittent (3 x 380-440 V) [A]	24.2	31.9	37.4	44	60.5	72.6	90.2	106	146	177
Continuous (3 x 440-480 V) [A]	19	25	31	36	47	59	73	95	118	145
Intermittent (3 x 440-480 V) [A]	20.9	27.5	34.1	39.6	51.7	64.9	80.3	105	130	160
Max. pre-fuses 1)[A]	63	63	63	63	80	100	125	160	250	250
Environment										
Estimated power loss at rated max. load [W] 4)	278	392	465	525	739	698	843	1083	1384	1474
Weight enclosure IP 20 [kg]										
Weight enclosure IP 21 [kg]	23	23	23	27	27	45	45	45	65	65
Weight enclosure IP 55 [kg]	23	23	23	27	27	45	45	45	65	65
Weight enclosure IP 66 [kg]	23	23	23	27	27	45	45	45	-	-
Efficiency 3)	0.98	0.98	0.98	0.98	0.98	0.98	0.98	0.98	0.98	0.99

Normal overload 110% for 1 minute										
Adjustable frequency drive		P110	P132	P160	P200	P250	P315	P355	P400	P450
Typical Shaft Output [kW]		110	132	160	200	250	315	355	400	450
Typical Shaft Output [HP] at 460V		150	200	250	300	350	450	500	550	600
IP 00		D3	D3	D4	D4	D4	E2	E2	E2	E2
IP 21		D1	D1	D2	D2	D2	E1	E1	E1	E1
IP 54		D1	D1	D2	D2	D2	E1	E1	E1	E1
Output current										
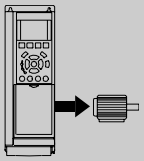	Continuous (3 x 400 V) [A]	212	260	315	395	480	600	658	745	800
	Intermittent (3 x 400 V) [A]	233	286	347	435	528	660	724	820	880
	Continuous (3 x 460-500 V) [A]	190	240	302	361	443	540	590	678	730
	Intermittent (3 x 460-500 V) [A]	209	264	332	397	487	594	649	746	803
	Continuous kVA (400 V AC) [kVA]	147	180	218	274	333	416	456	516	554
	Continuous kVA (460 V AC) [kVA]	151	191	241	288	353	430	470	540	582
	Max. cable size:									
	(line power, motor, brake) [mm²/ AWG] [2]	2x70 2x2/0		2x185 2x350 mcm			4x240 4x500 mcm			
Max. input current										
	Continuous (3 x 400 V) [A]	204	251	304	381	463	590	647	733	787
	Continuous (3 x 460/500V) [A]	183	231	291	348	427	531	580	667	718
	Max. pre-fuses[1][A]	300	350	400	500	600	700	900	900	900
	Environment									
	Estimated power loss at rated max. load [W] [4]	3234	3782	4213	5119	5893	7630	7701	8879	9428
	Weight enclosure IP 00 [kg]	81.9	90.5	111.8	122.9	137.7	221.4	234.1	236.4	277.3
	Weight enclosure IP 21 [kg]	95.5	104.1	125.4	136.3	151.3	263.2	270.0	272.3	313.2
	Weight enclosure IP 54 [kg]	95.5	104.1	125.4	136.3	151.3	263.2	270.0	272.3	313.2
	Efficiency [3]	0.98	0.98	0.98	0.98	0.98	0.98	0.98	0.98	0.98

[1] For type of fuse, see section *Fuses.*
[2] American Wire Gauge
[3] Measured using 16.4 ft. [5 m] shielded motor cables at rated load and rated frequency.
[4] The typical power loss is at normal load conditions and expected to be within +/- 15% (tolerance relates to variety in voltage and cable conditions).
Values are based on a typical motor efficiency (eff2/eff3 border line). Lower efficiency motors will also add to the power loss in the adjustable frequency drive and vice versa.
If the switching frequency is raised from nominal, the power losses may rise significantly.
LCP and typical control card power consumption values are included. Further options and customer load may add up to 30 W to the losses. (though typically only 4W extra for a fully loaded control card, or options for slot A or slot B, each).
Although measurements are made with state of the art equipment, some measurement inaccuracy must be allowed for (+/- 5%).

3.1.3. Line Supply 3 x 525-600 V AC

Normal overload 110% for 1 minute

Size:		P1K1	P1K5	P2K2	P3K0	P3K7	P4K0	P5K5	P7K5
	Typical Shaft Output [kW]	1.1	1.5	2.2	3	3.7	4	5.5	7.5
Output current									
	Continuous (3 x 525-550 V) [A]	2.6	2.9	4.1	5.2	-	6.4	9.5	11.5
	Intermittent (3 x 525-550 V) [A]	2.9	3.2	4.5	5.7	-	7.0	10.5	12.7
	Continuous (3 x 525-600 V) [A]	2.4	2.7	3.9	4.9	-	6.1	9.0	11.0
	Intermittent (3 x 525-600 V) [A]	2.6	3.0	4.3	5.4	-	6.7	9.9	12.1
	Continuous kVA (525 V AC) [kVA]	2.5	2.8	3.9	5.0	-	6.1	9.0	11.0
	Continuous kVA (575 V AC) [kVA]	2.4	2.7	3.9	4.9	-	6.1	9.0	11.0
	Max. cable size (line, motor, brake) [AWG] 2) [mm²]					-	24 - 10 AWG 0.00031-0.0062 in. [0.2-4 mm]²		
Max. input current									
	Continuous (3 x 525-600 V) [A]	2.4	2.7	4.1	5.2	-	5.8	8.6	10.4
	Intermittent (3 x 525-600 V) [A]	2.7	3.0	4.5	5.7	-	6.4	9.5	11.5
	Max. pre-fuses1) [A]	10	10	20	20	-	20	32	32
	Environment								
	Estimated power loss at rated max. load [W] 4)	50	65	92	122	-	145	195	261
	Enclosure IP 20								
	Weight, enclosure IP 20 [kg]	6.5	6.5	6.5	6.5	-	6.5	6.6	6.6
	Efficiency 4)	0.97	0.97	0.97	0.97	-	0.97	0.97	0.97

Normal overload 110% for 1 minute											
Adjustable frequency drive		P110	P132	P160	P200	P250	P315	P355	P400	P500	P560
Typical Shaft Output [kW]		110	132	160	200	250	315	355	400	500	560
Typical Shaft Output [HP] at 575 V		150	200	250	300	350	400	450	500	600	650
IP 00		D3	D3	D4	D4	D4	D4	E2	E2	E2	E2
IP 21		D1	D1	D2	D2	D2	D2	E1	E1	E1	E1
IP 54		D1	D1	D2	D2	D2	D2	E1	E1	E1	E1
Output current											
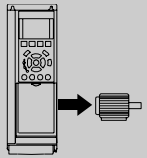	Continuous (3 x 550 V) [A]	162	201	253	303	360	418	470	523	596	630
	Intermittent (3 x 550 V) [A]	178	221	278	333	396	460	517	575	656	693
	Continuous (3 x 575-690V) [A]	155	192	242	290	344	400	450	500	570	630
	Intermittent (3 x 575-690 V) [A]	171	211	266	319	378	440	495	550	627	693
	Continuous kVA (550 V AC) [kVA]	154	191	241	289	343	398	448	498	568	600
	Continuous kVA (575 V AC) [kVA]	154	191	241	289	343	398	448	498	568	627
	Continuous kVA (690 V AC) [kVA]	185	229	289	347	411	478	538	598	681	753
	Max. cable size:										
	(line power, motor, brake) [mm²/ AWG] [2]	2x70 2x2/0		2x185 2x350 mcm				4x240 4x500 mcm			
Max. input current											
	Continuous (3 x 550 V) [A]	158	198	245	299	355	408	453	504	574	607
	Continuous (3 x 575 V) [A]	151	189	234	286	339	390	434	482	549	607
	Continuous (3 x 690 V) [A]	155	197	240	296	352	400	434	482	549	607
	Max. pre-fuses[1][A]	225	250	350	400	500	600	700	700	900	900
	Environment										
	Estimated power loss at rated max. load [W] [4]	3114	3612	4293	5156	5821	6149	6449	7249	8727	9673
	Weight enclosure IP 00 [kg]	81.9	90.5	111.8	122.9	137.7	151.3	221	221	236	277
	Weight enclosure IP 21 [kg]	95.5	104.1	125.4	136.3	151.3	164.9	263	263	272	313
	Weight enclosure IP 54 [kg]	95.5	104.1	125.4	136.3	151.3	164.9	263	263	272	313
	Efficiency [3]	0.98	0.98	0.98	0.98	0.98	0.98	0.98	0.98	0.98	0.98

[1] For type of fuse, see section *Fuses.*
[2] American Wire Gauge
[3] Measured using 16.4 ft. [5 m] shielded motor cables at rated load and rated frequency.
[4] The typical power loss is at normal load conditions and expected to be within +/- 15% (tolerance relates to variety in voltage and cable conditions).
Values are based on a typical motor efficiency (eff2/eff3 border line). Lower efficiency motors will also add to the power loss in the adjustable frequency drive and vice versa.
If the switching frequency is raised from nominal, the power losses may rise significantly.
LCP and typical control card power consumption values are included. Further options and customer load may add up to 30 W to the losses. (though typically only 4W extra for a fully loaded control card, or options for slot A or slot B, each).
Although measurements are made with state of the art equipment, some measurement inaccuracy must be allowed for (+/- 5%).

Line power supply (L1, L2, L3):	
Supply voltage	380-480 V ±10%
Supply voltage	525-600 V ±10%
Supply frequency	50/60 Hz
Max. imbalance temporary between line phases	3.0% of rated supply voltage
True Power Factor (λ)	≥ 0.9 nominal at rated load
Displacement Power Factor (cosφ) near unity	(> 0.98)
Switching on input supply L1, L2, L3 (power-ups) ≤ enclosure type A	maximum twice/min.
Switching on input supply L1, L2, L3 (power-ups) ≥ enclosure type B, C	maximum once/min.
Switching on input supply L1, L2, L3 (power-ups) ≥ enclosure type D, E	maximum once/2 min.
Environment according to EN60664-1	overvoltage category III / pollution degree 2

The unit is suitable for use on a circuit capable of delivering not more than 100.000 RMS symmetrical Amperes, 480/600 V maximum.

Motor output (U, V, W):	
Output voltage	0 - 100% of supply voltage
Output frequency	0 - 1000 Hz
Switching on output	Unlimited
Ramp times	1 - 3600 sec.

Torque characteristics:	
Starting torque (Constant torque)	maximum 110% for 1 min.*
Starting torque	maximum 120% up to 0.5 sec.*
Overload torque (Constant torque)	maximum 110% for 1 min.*

**Percentage relates to the nominal torque for the VLT HVAC Drive.*

Cable lengths and cross-sections:	
Max. motor cable length, shielded/armored	VLT HVAC Drive: 492 ft [150 m]
Max. motor cable length, unshielded/unarmored	VLT HVAC Drive: 984 ft [300 m]
Max. cross-section to motor, line power, load sharing and brake *	
Maximum cross-section to control terminals, rigid wire	0.0023 in.^{2} [1.5 mm^2]/16 AWG (2 x 0.0012 in.^{2} [2 x 0.75 mm^2])
Maximum cross-section to control terminals, flexible cable	0.0016 in.^{2} [1 mm^2]/18 AWG
Maximum cross-section to control terminals, cable with enclosed core	0.00078 in.^{2} [0.5 mm^2]/20 AWG
Minimum cross-section to control terminals	0.00039 in.^{2} [0.25 mm^2]

** See Line Supply tables for more information!*

Digital inputs:	
Programmable digital inputs	4 (6)
Terminal number	18, 19, 27 [1)], 29, 32, 33,
Logic	PNP or NPN
Voltage level	0 - 24 V DC
Voltage level, logic'0' PNP	< 5 V DC
Voltage level, logic'1' PNP	> 10 V DC
Voltage level, logic '0' NPN	> 19 V DC
Voltage level, logic '1' NPN	< 14 V DC
Maximum voltage on input	28 V DC

Input resistance, R_i	approx. 4 kΩ

All digital inputs are galvanically isolated from the supply voltage (PELV) and other high-voltage terminals.
1) Terminals 27 and 29 can also be programmed as output.

3

Analog inputs:	
Number of analog inputs	2
Terminal number	53, 54
Modes	Voltage or current
Mode select	Switch S201 and switch S202
Voltage mode	Switch S201/switch S202 = OFF (U)
Voltage level	: 0 to + 10 V (scaleable)
Input resistance, R_i	approx. 10 kΩ
Max. voltage	± 20 V
Current mode	Switch S201/switch S202 = ON (I)
Current level	0/4 to 20 mA (scalable)
Input resistance, R_i	approx. 200 Ω
Max. current	30 mA
Resolution for analog inputs	10 bit (+ sign)
Accuracy of analog inputs	Max. error 0.5% of full scale
Bandwidth	: 200 Hz

The analog inputs are galvanically isolated from the supply voltage (PELV) and other high-voltage terminals.

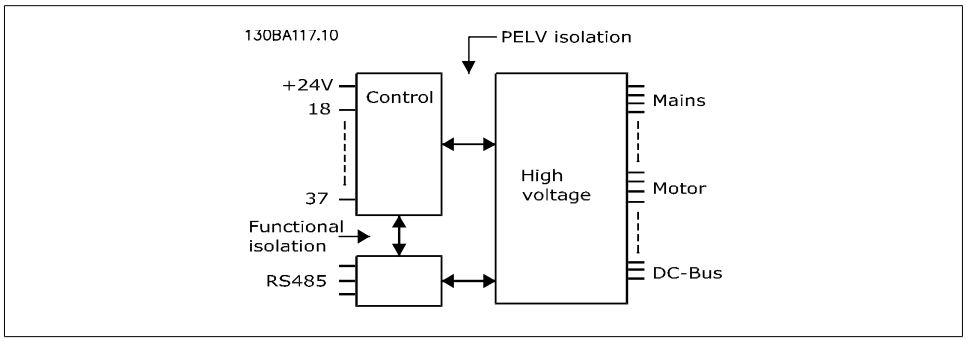

Pulse inputs:	
Programmable pulse inputs	2
Terminal number pulse	29, 33
Max. frequency at terminal, 29, 33	110 kHz (push-pull driven)
Max. frequency at terminal, 29, 33	5 kHz (open collector)
Min. frequency at terminal 29, 33	4 Hz
Voltage level	see section on Digital input
Maximum voltage on input	28 V DC
Input resistance, R_i	approx. 4 kΩ
Pulse input accuracy (0.1-1 kHz)	Max. error: 0.1% of full scale

Analog output:	
Number of programmable analog outputs	1
Terminal number	42
Current range at analog output	0/4 - 20 mA
Max. load to common at analog output	500 Ω
Accuracy on analog output	Max. error: 0.8% of full scale
Resolution on analog output	8 bit

The analog output is galvanically isolated from the supply voltage (PELV) and other high-voltage terminals.

Control card, RS-485 serial communication:	
Terminal number	68 (P,TX+, RX+), 69 (N,TX-, RX-)
Terminal number 61	Common for terminals 68 and 69

The RS-485 serial communication circuit is functionally separated from other central circuits and galvanically isolated from the supply voltage (PELV).

Digital output:	
Programmable digital/pulse outputs	2
Terminal number	27, 29 1)
Voltage level at digital/frequency output	0 - 24 V
Max. output current (sink or source)	40 mA
Max. load at frequency output	1 kΩ
Max. capacitive load at frequency output	10 nF
Minimum output frequency at frequency output	0 Hz
Maximum output frequency at frequency output	32 kHz
Accuracy of frequency output	Max. error: 0.1% of full scale
Resolution of output frequency	12 bit

1) Terminal 27 and 29 can also be programmed as input.

The digital output is galvanically isolated from the supply voltage (PELV) and other high-voltage terminals.

Control card, 24 V DC output:	
Terminal number	12, 13
Max. load	: 200 mA

The 24 V DC supply is galvanically isolated from the supply voltage (PELV), but has the same potential as the analog and digital inputs and outputs.

Relay outputs:	
Programmable relay outputs	2
Relay 01 Terminal number	1-3 (break), 1-2 (make)
Max. terminal load (AC-1)1) on 1-3 (NC), 1-2 (NO) (Resistive load)	240 V AC, 2 A
Max. terminal load (AC-15)1) (Inductive load @ cosφ 0.4)	240 V AC, 0.2 A
Max. terminal load (DC-1)1) on 1-2 (NO), 1-3 (NC) (Resistive load)	60 V DC, 1 A
Max. terminal load (DC-13)1) (Inductive load)	24 V DC, 0.1 A
Relay 02 Terminal number	4-6 (break), 4-5 (make)
Max. terminal load (AC-1)1) on 4-5 (NO) (Resistive load)	240 V AC, 2 A
Max. terminal load (AC-15)1) on 4-5 (NO) (Inductive load @ cosφ 0.4)	240 V AC, 0.2 A
Max. terminal load (DC-1)1) on 4-5 (NO) (Resistive load)	80 V DC, 2 A
Max. terminal load (DC-13)1) on 4-5 (NO) (Inductive load)	24 V DC, 0.1 A

3

Max. terminal load (AC-1)[1] on 4-6 (NC) (Resistive load)	240 V AC, 2 A
Max. terminal load (AC-15)[1] on 4-6 (NC) (Inductive load @ cosφ 0.4)	240 V AC, 0.2 A
Max. terminal load (DC-1)[1] on 4-6 (NC) (Resistive load)	50 V DC, 2 A
Max. terminal load (DC-13)[1] on 4-6 (NC) (Inductive load)	24 V DC, 0.1 A
Min. terminal load on 1-3 (NC), 1-2 (NO), 4-6 (NC), 4-5 (NO)	24 V DC 10 mA, 24 V AC 20 mA
Environment according to EN 60664-1	overvoltage category III/pollution degree 2

1) IEC 60947 part 4 and 5
The relay contacts are galvanically isolated from the rest of the circuit by reinforced isolation (PELV).

Control card, 10 V DC output:	
Terminal number	50
Output voltage	10.5 V ±0.5 V
Max. load	25 mA

The 10 V DC supply is galvanically isolated from the supply voltage (PELV) and other high-voltage terminals.

Control characteristics:	
Resolution of output frequency at 0 - 1000 Hz	: +/- 0.003 Hz
System response time (terminals 18, 19, 27, 29, 32, 33)	: ≤ 2 ms
Speed control range (open-loop)	1:100 of synchronous speed
Speed accuracy (open-loop)	30 - 4000 rpm: Maximum error of ±8 rpm

All control characteristics are based on a 4-pole asynchronous motor

Surroundings:	
Enclosure ≤ enclosure type D	IP 00, IP 21, IP 54
Enclosure ≥ enclosure type D, E	IP 21, IP 54
Enclosure kit available ≤ enclosure type D	IP 21/TYPE 1/IP 4X top
Vibration test	1.0 g
Max. relative humidity	5%-95% (IEC 721-3-3; Class 3K3 (non-condensing) during operation
Aggressive environment (IEC 721-3-3), uncoated	class 3C2
Aggressive environment (IEC 721-3-3), coated	class 3C3
Test method according to IEC 60068-2-43 H2S (10 days)	
Ambient temperature (at 60 AVM switching mode)	
- with derating	max. 55 ° C[1]
- with full output power, typical EFF2 motors	max. 50 ° C[1]
- at full continuous FC output current	max. 45 ° C[1]

[1] For more information on derating for high ambient temperature AVM and SFAVM, see the Design Guide, section on Special Conditions.

Minimum ambient temperature during full-scale operation	32°F [0°C]
Minimum ambient temperature at reduced performance	14°F [-10°C]
Temperature during storage/transport	-13°-+°149/°158°F [-25°-+65°/70°C]
Maximum altitude above sea level without derating	3280 ft [1000 m]
Maximum altitude above sea level with derating	9842 ft [3000 m]

Derating for high altitude, see section on special conditions.

EMC standards, Emission	EN 61800-3, EN 61000-6-3/4, EN 55011, IEC 61800-3
EMC standards, Immunity	EN 61800-3, EN 61000-6-1/2,

	EN 61000-4-2, EN 61000-4-3, EN 61000-4-4, EN 61000-4-5, EN 61000-4-6

See section on special conditions!

Control card performance:	
Scan interval	: 5 ms

Control card, USB serial communication:	
USB standard	1.1 (Full speed)
USB plug	USB type B "device" plug

Connection to PC is carried out via a standard host/device USB cable.
The USB connection is galvanically isolated from the supply voltage (PELV) and other high-voltage terminals.
The USB connection is not galvanically isolated from protection ground. Use only isolated laptop/PC as connection to the USB connector on VLT HVAC Drive or an isolated USB cable/drive.

Protection and Features:

- Electronic thermal motor protection against overload.
- Temperature monitoring of the heatsink ensures that the adjustable frequency drive trips if the temperature reaches 203°F ± 9°F [95°C ± 5°C]. An overload temperature cannot be reset until the temperature of the heatsink is below 158°F ± 9°F [70°C ± 5°C] (Guideline - these temperatures may vary for different power sizes, enclosures, etc.). VLT HVAC drive has an auto-derating function to prevent it's heatsink from reaching 203° F [95°C].
- The adjustable frequency drive is protected against short-circuits on motor terminals U, V, W.
- If a line phase is missing, the adjustable frequency drive trips or issues a warning (depending on the load).
- Monitoring of the intermediate circuit voltage ensures that the adjustable frequency drive trips if the intermediate circuit voltage is too low or too high.
- The adjustable frequency drive is protected against ground faults on motor terminals U, V, W.

3.2. Efficiency

Efficiency of VLT HVAC (η_{VLT})
The load on the adjustable frequency drive has little effect on its efficiency. In general, the efficiency is the same at the rated motor frequency $f_{M,N}$, even if the motor supplies 100% of the rated shaft torque, or only 75% in case of part loads.

This also means that the efficiency of the adjustable frequency drive does not change even if other U/f characteristics are chosen.
However, the U/f characteristics influence the efficiency of the motor.

The efficiency declines a little when the switching frequency is set to a value greater than 5 kHz. The efficiency will also be slightly reduced if the line voltage is 480 V, or if the motor cable is longer than 98.43 ft. [30 m].

Efficiency of the motor (η_{MOTOR})
The efficiency of a motor connected to the adjustable frequency drive depends on magnetizing level. In general, the efficiency is just as good as with line operation. The efficiency of the motor depends on the type of motor.

In the range of 75-100% of the rated torque, the efficiency of the motor is practically constant, both when it is controlled by the adjustable frequency drive, and when it runs directly on line power.

In small motors, the influence from the U/f characteristic on efficiency is marginal. However, in motors from 15 hp [11 kW] and up, the advantages are significant.

In general, the switching frequency does not affect the efficiency of small motors. The efficiency of motors from 15 hp [11 kW] and up improves by 1-2%. This is because the sine shape of the motor current is almost perfect at high switching frequency.

Efficiency of the system (η_{SYSTEM})
To calculate the system efficiency, the efficiency of VLT HVAC (η_{VLT}) is multiplied by the efficiency of the motor (η_{MOTOR}):
$\eta_{SYSTEM}) = \eta_{VLT} \times \eta_{MOTOR}$

Calculate the efficiency of the system at different loads based on the graph below.

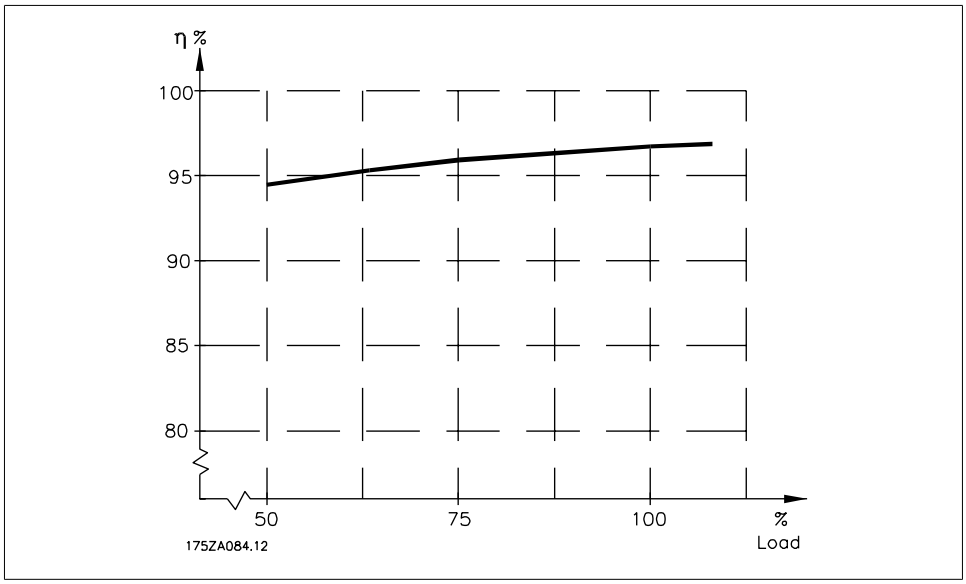

3.3. Acoustic noise

The acoustic noise from the adjustable frequency drive comes from three sources:

1. DC intermediate circuit coils.
2. Integrated fan.
3. RFI filter choke.

Typical values are measured at a distance of 3.28 ft. [1 m] from the unit:

Encapsulation	**At reduced fan speed (50%)** [dBA] ***	**Full fan speed** [dBA]
A2	51	60
A3	51	60
A5	54	63
B1	61	67
B2	58	70
C1	52	62
C2	55	65
D1+D3	74	76
D2+D4	73	74
E1/E2 *	73	74
E1/E2 **	82	83
* 450 hp [315 kW], 380-480 VAC and 500 hp [355 kW], 525-600 VAC only! ** Remaining E1+E2 power sizes. *** For D and E sizes, reduced fan speed is at 87%, measured at 200 V.		

3.4. Peak voltage on motor

When a transistor in the inverter bridge switches, the voltage across the motor increases by a du/dt ratio depending on:

- the motor cable (type, cross-section, length, shielded or unshielded)
- inductance

The natural induction causes an overshoot U_{PEAK} in the motor voltage before it stabilizes itself at a level depending on the voltage in the intermediate circuit. The rise time and the peak voltage U_{PEAK} affect the service life of the motor. If the peak voltage is too high, motors without phase coil insulation are especially affected. If the motor cable is short (by a few yards), the rise time and peak voltage are lower.
If the motor cable is long (328 ft. [100 m]), the rise time and peak voltage are higher.

In motors without phase insulation paper or other insulation reinforcement suitable for operation with voltage supply (such as an adjustable frequency drive), fit a du/dt filter or a sine-wave filter on the output of the adjustable frequency drive.

3

3.5. Special Conditions

3.5.1. Purpose of derating

Derating must be taken into account when using the adjustable frequency drive at low air pressure (high elevations), at low speeds, with long motor cables, cables with a large cross-section or at high ambient temperature. The required action is described in this section.

3.5.2. Derating for Ambient Temperature

The average temperature ($T_{AMB,\ AVG}$) measured over 24 hours must be at least 9°F [5°C] lower than the maximum allowed ambient temperature ($T_{AMB,MAX}$).

If the adjustable frequency drive is operated at high ambient temperatures, the continuous output current should be decreased.

The derating depends on the switching pattern, which can be set to 60 AVM or SFAVM in parameter 14-00.

A enclosures

60 AVM - Pulse Width Modulation

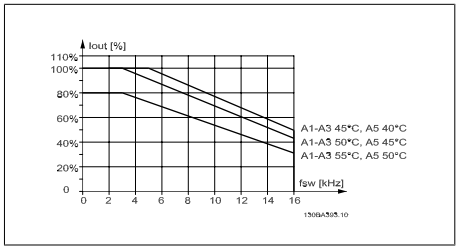

3.1: Derating of I_{out} for different $T_{AMB,\ MAX}$ for enclosure A, using 60 AVM

SFAVM - Stator Frequency Asyncron Vector Modulation

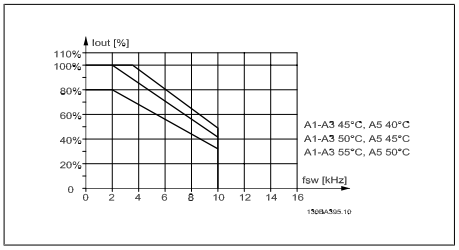

3.2: Derating of I_{out} for different $T_{AMB,\ MAX}$ for enclosure A, using SFAVM

In enclosure A, the length of the motor cable has a relatively high impact on the recommended derating. Therefore, the recommended derating for an application with max. 32 ft. [10 m] motor cable is also shown.

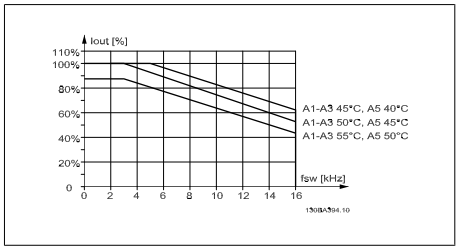

3.3: Derating of I_{out} for different $T_{AMB,\ MAX}$ for enclosure A, using 60 AVM and maximum 32 ft [10 m] motor cable

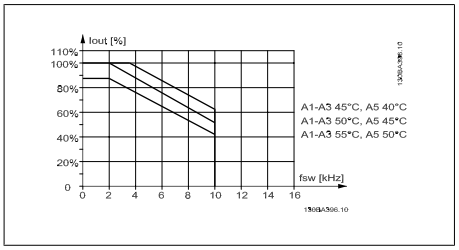

3.4: Derating of I_{out} for different $T_{AMB,\ MAX}$ for enclosure A, using SFAVM and a maximum of 32 ft. [10 m] motor cable

B enclosures

60 AVM - Pulse Width Modulation

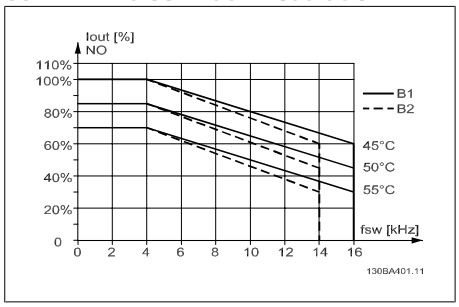

3.5: Derating of I_{out} for different $T_{AMB, MAX}$ for enclosure B, using 60 AVM in normal torque mode (110% over torque)

SFAVM - Stator Frequency Asyncron Vector Modulation

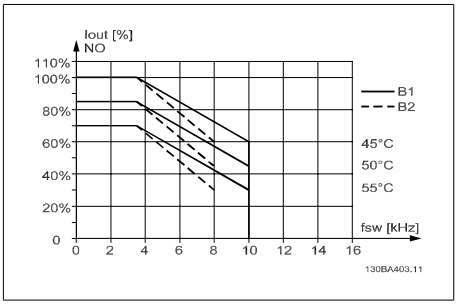

3.6: Derating of I_{out} for different $T_{AMB, MAX}$ for enclosure B, using SFAVM in normal torque mode (110% over torque)

C enclosures

60 AVM - Pulse Width Modulation

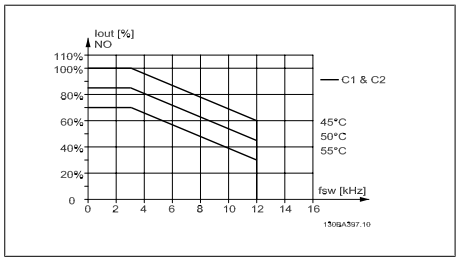

3.7: Derating of I_{out} for different $T_{AMB, MAX}$ for enclosure C, using 60 AVM in normal torque mode (110% over torque)

SFAVM - Stator Frequency Asyncron Vector Modulation

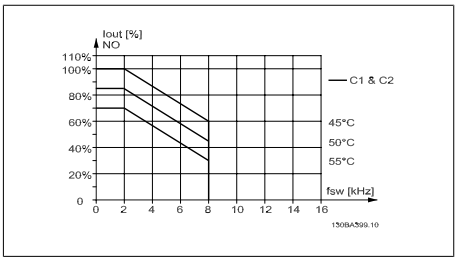

3.8: Derating of I_{out} for different $T_{AMB, MAX}$ for enclosure C, using SFAVM in normal torque mode (110% over torque)

D enclosures

60 AVM - Pulse Width Modulation, 380-480 V

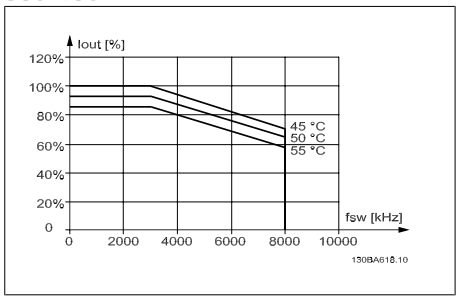

3.9: Derating of I_{out} for different $T_{AMB, MAX}$ for enclosure D at 480 V, using 60 AVM in normal torque mode (110% over torque)

SFAVM - Stator Frequency Asyncron Vector Modulation

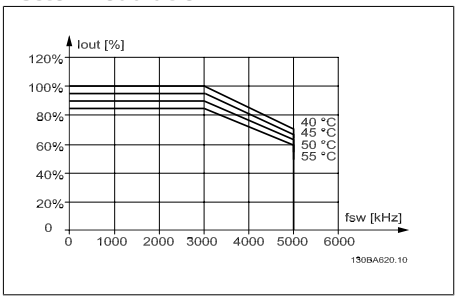

3.10: Derating of I_{out} for different $T_{AMB, MAX}$ for enclosure D at 480 V, using SFAVM in normal torque mode (110% over torque)

3

60 AVM - Pulse Width Modulation, 525-600 V (except P315)

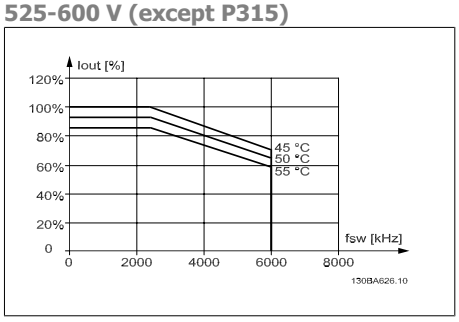

3.11: Derating of I_{out} for different $T_{AMB, MAX}$ for enclosure D at 600 V, using 60 AVM in normal torque mode (110% over torque). Note: *not* valid for P315.

SFAVM - Stator Frequency Asyncron Vector Modulation

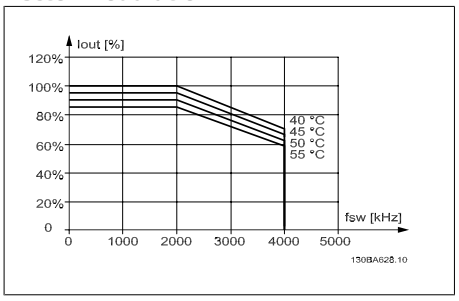

3.12: Derating of I_{out} for different $T_{AMB, MAX}$ for enclosure D at 600 V, using SFAVM in normal torque mode (110% over torque). Note: *not* valid for P315.

60 AVM - Pulse Width Modulation, 525-600 V, P315

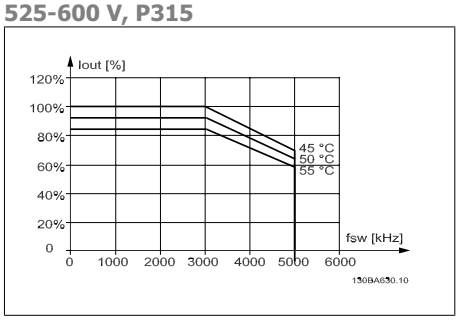

3.13: Derating of I_{out} for different $T_{AMB, MAX}$ for enclosure D at 600 V, using 60 AVM in normal torque mode (110% over torque). Note: P315 *only*.

SFAVM - Stator Frequency Asyncron Vector Modulation

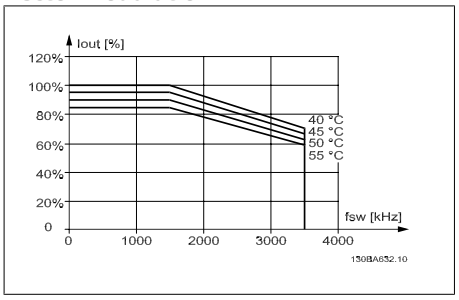

3.14: Derating of I_{out} for different $T_{AMB, MAX}$ for enclosure D at 600 V, using SFAVM in normal torque mode (110% over torque). Note: P315 *only*.

E enclosures

60 AVM - Pulse Width Modulation, 380-480 V

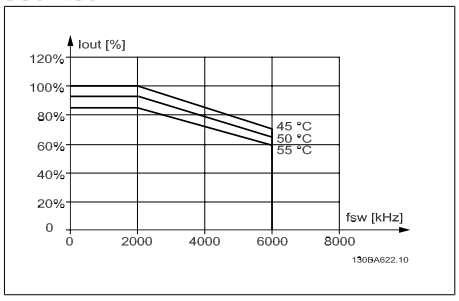

3.15: Derating of I_{out} for different $T_{AMB, MAX}$ for enclosure E at 480 V, using 60 AVM in normal torque mode (110% over torque)

SFAVM - Stator Frequency Asyncron Vector Modulation

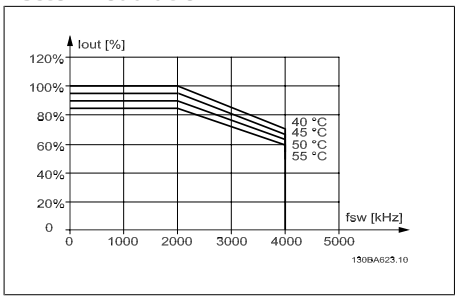

3.16: Derating of I_{out} for different $T_{AMB, MAX}$ for enclosure E at 480 V, using SFAVM in normal torque mode (110% over torque)

60 AVM - Pulse Width Modulation, 525-600 V

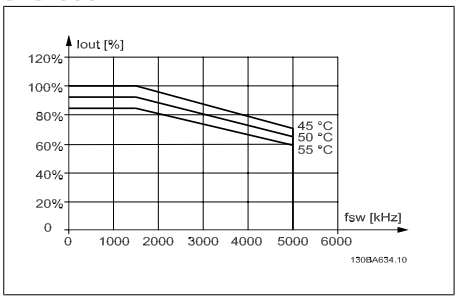

3.17: Derating of I_{out} for different $T_{AMB, MAX}$ for enclosure E at 600 V, using 60 AVM in normal torque mode (110% over torque).

SFAVM - Stator Frequency Asyncron Vector Modulation

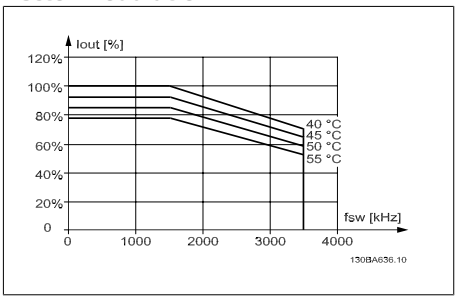

3.18: Derating of I_{out} for different $T_{AMB, MAX}$ for enclosure E at 600 V, using SFAVM in normal torque mode (110% over torque).

3.5.3. Derating for Low Air Pressure

The cooling capability of air is decreased at a lower air pressure.

At altitudes higher than 6,600 feet [2 km], please contact Danfoss Drives regarding PELV.

At an altitude lower than 3,280 ft [1,000 m], no derating is necessary; but at an altitude higher than 3,280 ft [1,000 m], the ambient temperature (T_{AMB}) or max. output current (I_{out}) should be derated in accordance with the diagram shown.

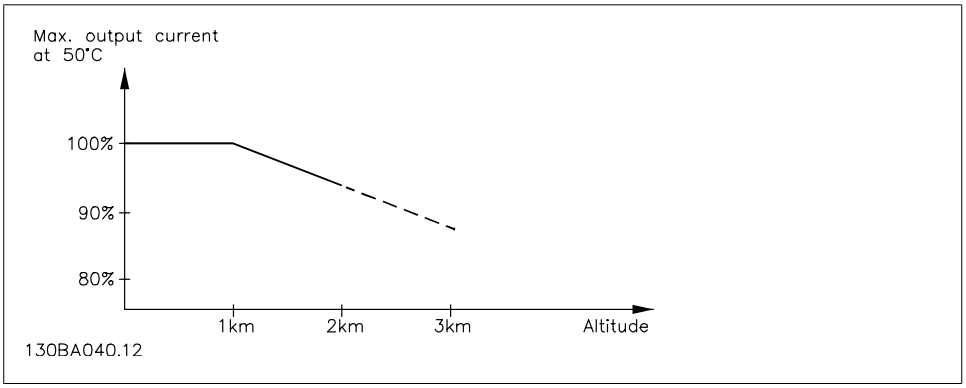

3.19: Derating of output current versus altitude at $T_{AMB, MAX}$. At altitudes higher than 6,600 feet [2 km], please contact Danfoss Drives regarding PELV.

An alternative is to lower the ambient temperature at high altitudes and thereby ensure 100% output current at high altitudes.

3.5.4. Derating for Running at Low Speed

When a motor is connected to an adjustable frequency drive, it is necessary to make sure that the cooling of the motor is adequate.

A problem may occur at low RPM values in constant torque applications. The motor fan may not be able to supply the required volume of air for cooling, which limits the torque that can be supported. Therefore, if the motor is to be run continuously at an RPM value lower than half of the rated value, the motor must be supplied with additional air-cooling (or a motor designed for this type of operation may be used).

An alternative is to reduce the load level of the motor by choosing a larger motor. However, the design of the adjustable frequency drive limits the motor size.

3.5.5. Derating for Installing Long Motor Cables or Cables with Larger Cross-Section

The maximum cable length for this adjustable frequency drive is 984 ft [300 m] for unshielded cable, and 492 ft [150 m] for shielded cable.

The adjustable frequency drive has been designed to work using a motor cable with a rated cross-section. If a cable with a larger cross-section is used, reduce the output current by 5% for every step the cross-section is increased.
(Increased cable cross-section leads to increased capacity to ground, and thus an increased ground leakage current).

3.5.6. Automatic adaptations to ensure performance

The adjustable frequency drive constantly checks for critical levels of internal temperature, load current, high voltage on the intermediate circuit and low motor speeds. As a response to a critical level, the adjustable frequency drive can adjust the switching frequency and/or change the switching pattern in order to ensure the performance of the drive. The capability to automatically reduce the output current extends the acceptable operating conditions even further.

3.6. Options and Accessories

Danfoss offers a wide range of options and accessories for the VLT adjustable frequency drives.

3.6.1. Mounting Option Modules in Slot B

The power to the adjustable frequency drive must be disconnected.

For A2 and A3 enclosures:

- Remove the LCP (Local Control Panel), the terminal cover and the LCP frame from the adjustable frequency drive.
- Insert the MCB10x option card into slot B.
- Connect the control cables and fasten the cables with the enclosed cable strips.
  Remove the knock-out in the extended LCP frame delivered in the option set, so that the option will fit under the extended LCP frame.
- Fit the extended LCP frame and terminal cover.
- Fit the LCP or blind cover in the extended LCP frame.

- Connect power to the adjustable frequency drive.
- Set up the input/output functions in the corresponding parameters, as mentioned in the section *General Technical Data*.

For B1, B2, C1 and C2 enclosures:

- Remove the LCP and the LCP cradle.
- Fit the MCB 10x option card into slot B.
- Connect the control cables and relieve the cable by the enclosed cable strips.
- Fit the cradle.
- Fit the LCP.

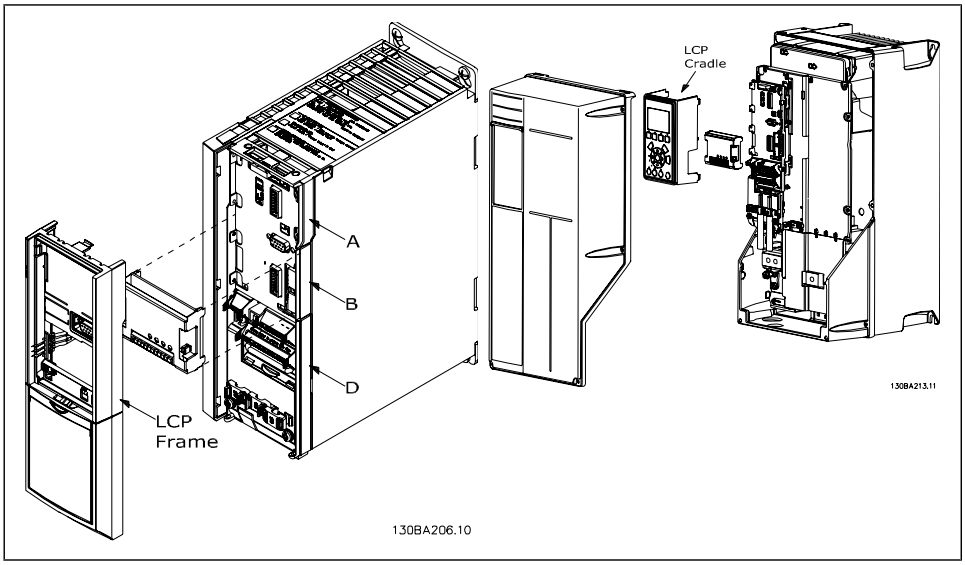

A2 and A3 enclosures	A5, B1, B2, C1 and C2 enclosures

3

3.6.2. General Purpose Input Output Module MCB 101

MCB 101 is used for extension of the number of digital and analog inputs and outputs of the VLT HVAC.

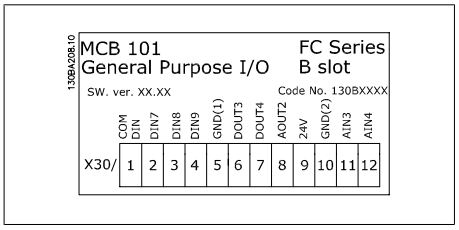

Contents: MCB 101 must be fitted into slot B in the VLT HVAC Drive.

- MCB 101 option module
- Extended LCP frame
- Terminal cover

Galvanic Isolation in the MCB 101

Digital/analog outputs in the MCB 101 are galvanically isolated from other inputs/outputs on the MCB 101, but not from the ones on the control card of the drive. Digital/analog outputs in the MCB 101 are galvanically isolated from other inputs/outputs on the MCB 101, but not from the ones on the control card of the drive.

If digital inputs 7, 8 or 9 are to be switched using the internal 24 V power supply (terminal 9), the connection between terminal 1 and 5 illustrated in the drawing has to be established.

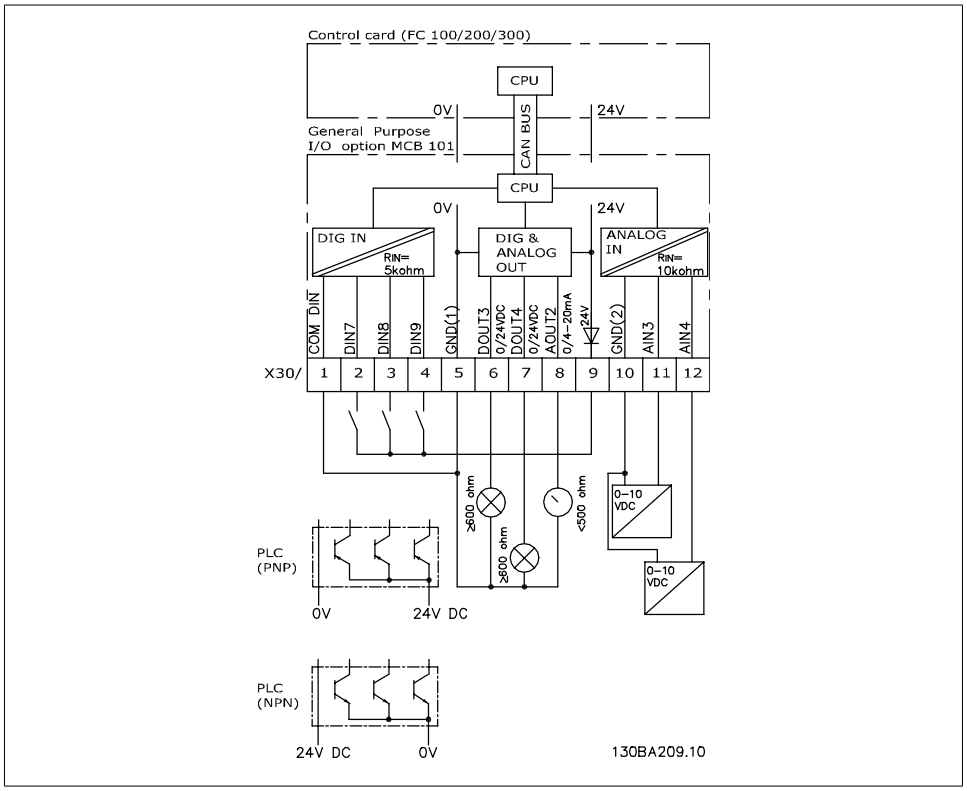

3.20: Principle Diagram

3.6.3. Digital inputs - Terminal X30/1-4

Parameters for set-up: 5-16, 5-17 and 5-18

Number of digital inputs	Voltage level	Voltage levels	Input impedance	Max. load
3	0-24 V DC	PNP type: Common = 0 V Logic "0": Input < 5 V DC Logic "0": Input > 10 V DC NPN type: Common = 24 V Logic "0": Input > 19 V DC Logic "0": Input < 14 V DC	Approximately 5 K ohm	± 28 V continuous ± 37 V in minimum 10 sec.

3.6.4. Analog voltage inputs - Terminal X30/10-12

Parameters for set-up: 6-3*, 6-4* and 16-76

Number of analog voltage inputs	Standardized input signal	Input impedance	Resolution	Max. load
2	0-10 V DC	Approximately 5 K ohm	10 bits	± 20 V continuously

3.6.5. Digital outputs - Terminal X30/5-7

Parameters for set-up: 5-32 and 5-33

Number of digital outputs	Output level	Tolerance	Max. load
2	0 or 24 V DC	± 4 V	≥ 600 ohm

3.6.6. Analog outputs - Terminal X30/5+8

Parameters for set-up: 6-6* and 16-77

Number of analog outputs	Output signal level	Tolerance	Max. load
1	0/4 - 20 mA	± 0.1 mA	< 500 ohm

3

3.6.7. Relay Option MCB 105

The MCB 105 option includes 3 pieces of SPDT contacts and must be fitted into option slot B.

Electrical Data:	
Max terminal load (AC-1) [1] (Resistive load)	240 V AC 2A
Max terminal load (AC-15) [1] (Inductive load @ cosφ 0.4)	240 V AC 0.2 A
Max terminal load (DC-1) [1] (Resistive load)	24 V DC 1 A
Max terminal load (DC-13) [1] (Inductive load)	24 V DC 0.1 A
Min terminal load (DC)	5 V 10 mA
Max switching rate at rated load/min load	6 min^{-1}/20 sec^{-1}

1) IEC 947 part 4 and 5

When the relay option kit is ordered separately, the kit includes:

- Relay Module MCB 105
- Extended LCP frame and enlarged terminal cover
- Label for covering access to switches S201, S202 and S801
- Cable strips for fastening cables to relay module

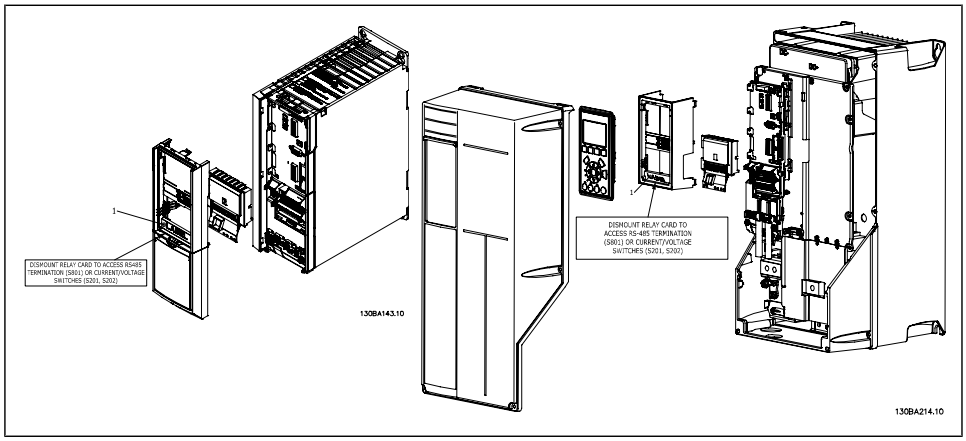

A2-A3 A5-C2

[1] **IMPORTANT**! The label MUST be placed on the LCP frame as shown (UL-approved).

Warning Dual supply

How to add the MCB 105 option:

- See the mounting instructions at the beginning of the section *Options and Accessories.*
- The power to the live part connections on relay terminals must be disconnected.
- Do not mix live parts (high voltage) with control signals (PELV).
- Select the relay functions in par. 5-40 [6-8], 5-41 [6-8] and 5-42 [6-8].

NB! (Index [6] is relay 7, index [7] is relay 8, and index [8] is relay 9)

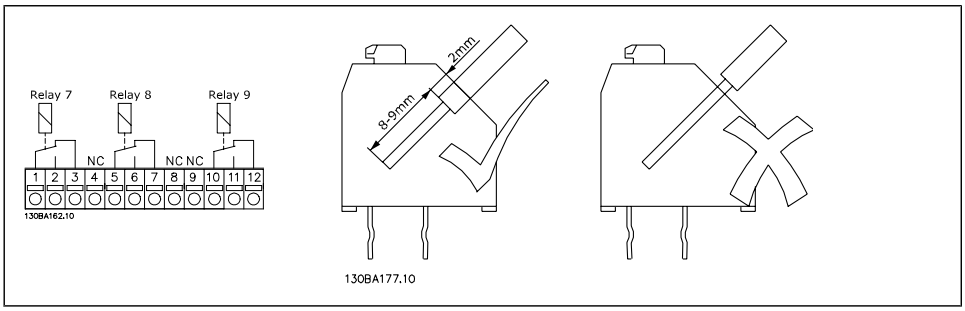

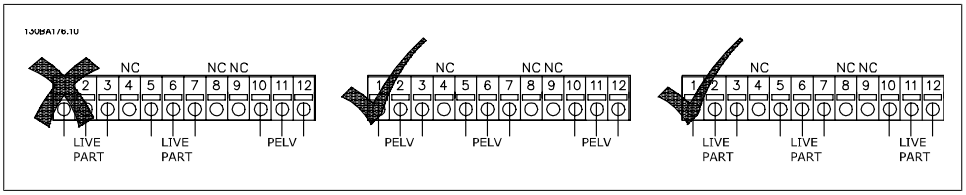

Do not combine low voltage parts and PELV systems.

3

3.6.8. 24 V Backup Option MCB 107 (Option D)

External 24 V DC Supply

An external 24 V DC supply can be installed for low-voltage supply to the control card and any option card installed. This enables full operation of the LCP (including the parameter setting) and serial communication busses without line power supplied to the power section.

External 24 V DC supply specification:

Input voltage range	24 V DC ±15% (max. 37 V in 10 s)
Max. input current	2.2 A
Average input current for the adjustable frequency drive	0.9 A
Max. cable length	246 ft [75 m]
Input capacitance load	< 10 uF
Power-up delay	< 0.6 s

The inputs are protected.

Terminal numbers:

Terminal 35: - external 24 V DC supply.

Terminal 36: + external 24 V DC supply.

Follow these steps:

1. Remove the LCP or blind cover.
2. Remove the terminal cover.
3. Remove the cable decoupling plate and the plastic cover underneath.
4. Insert the 24 V DC backup external supply option in the option slot.
5. Mount the cable decoupling plate.
6. Attach the terminal cover and the LCP or blind cover.

When MCB 107, 24 V backup option is supplying the control circuit, the internal 24 V supply is automatically disconnected.

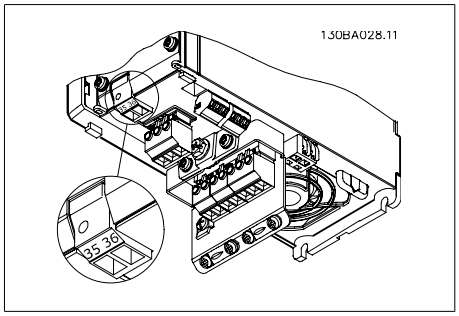

3.21: Connection to 24 V back-up supplier (A2-A3).

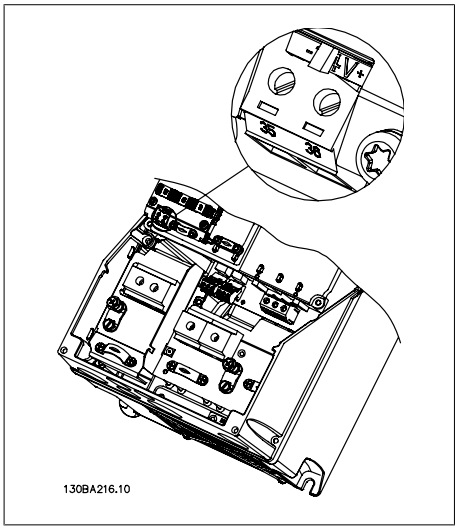

3.22: Connection to 24 V back-up supplier (A5-C2).

3.6.9. Analog I/O option MCB 109

The Analog I/O card should be used for the following:

- Providing battery back-up of clock function on control card
- As a general extension of analog I/O selection available on a control card, such as for multi-zone control with three pressure transmitters.
- Turning the adjustable frequency drive into a decentral I/O block supporting the Building Management System with inputs for sensors and outputs for operating dampers and valve switches.
- Support Extended PID controllers with I/Os for setpoint inputs, transmitter/sensor inputs and outputs for switches.

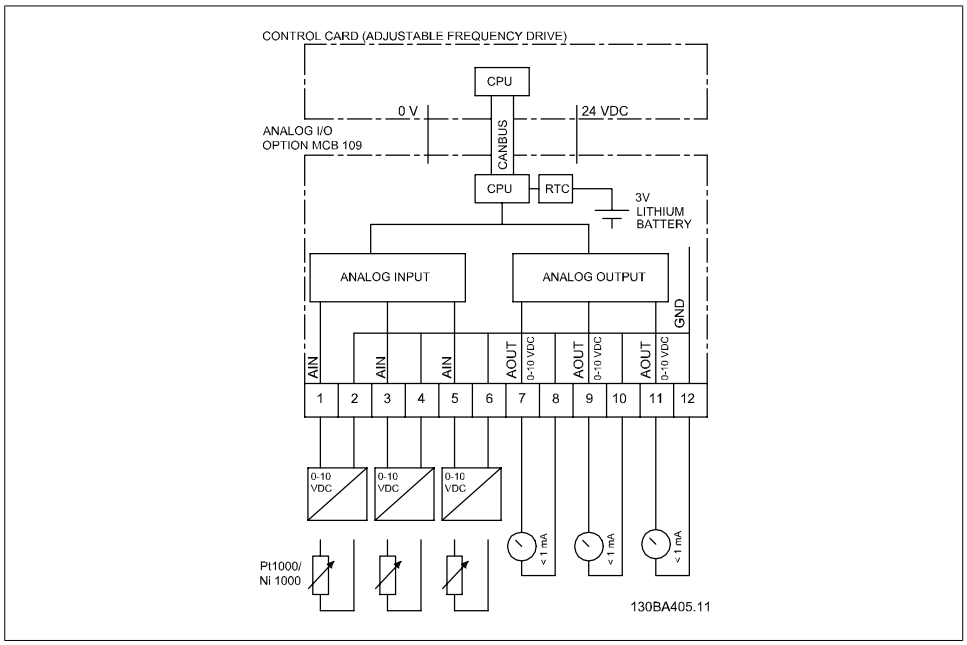

3.23: Principle diagram for analog I/O mounted in the adjustable frequency drive.

Analog I/O configuration

3 x analog inputs, capable of handling following:

- 0-10 VDC

OR

- 0-20 mA (voltage input 0-10 V) by mounting a 510Ω resistor across terminals (see NB!)
- 4-20 mA (voltage input 2-10 V) by mounting a 510Ω resistor across terminals (see NB!)
- Ni1000 temperature sensor of 1000 Ω at 32° F [0° C]. Specifications according to DIN43760
- Pt1000 temperature sensor of 1000 Ω at 32° F [0° C]. Specifications according to IEC 60751

3 x analog outputs supplying 0-10 VDC.

NOTE
Please note the values available within the different standard groups of resistors:
E12: Closest standard value is 470Ω, creating an input of 449.9Ω and 8.997 V.
E24: Closest standard value is 510Ω, creating an input of 486.4Ω and 9.728 V.
E48: Closest standard value is 511Ω, creating an input of 487.3Ω and 9.746 V.
E96: Closest standard value is 523Ω, creating an input of 498.2Ω and 9.964 V.

Analog inputs - terminal X42/1-6
Parameter group for read out: 18-3* See also *VLT® HVAC Drive Programming Guide*
Parameter groups for set-up: 26-0*, 26-1*, 26-2* and 26-3* See also *VLT® HVAC Drive Programming Guide*

3 x analog inputs	Operating range	Resolution	Accuracy	Sampling	Max load	Impedance
Used as temperature sensor input	-58°- +302° F [-50° - +150° C]	11 bits	-58° F [-50° C] ±1 Kelvin +302° F [+150° C] ±2 Kelvin	3 Hz	-	-
Used as voltage input	0-10 VDC	10 bits	0.2% of full scale at cal. temperature	2.4 Hz	+/- 20 V continuously	Approximately 5 kΩ

When used for voltage, analog inputs are scalable by parameters for each input.

When used for temperature sensor, analog input scaling is preset to necessary signal level for specified temperature range.

When analog inputs are used for temperature sensors, it is possible to read out feedback values in both °C and °F.

When operating with temperature sensors, the maximum cable length to connect sensors is 262 ft [80 m] with non-shielded/non-twisted wires.

Analog outputs - terminal X42/7-12
Parameter group for read out and write: 18-3* See also *VLT® HVAC Drive Programming Guide*
Parameter groups for set-up: 26-4*, 26-5* and 26-6* See also *VLT® HVAC Drive Programming Guide*

3 x analog outputs	Output signal level	Resolution	Linearity	Max load
Volt	0-10 VDC	11 bits	1% of full scale	1 mA

Analog outputs are scalable by parameters for each output.

The function assigned is selectable via a parameter and has the same options as for analog outputs on the control card.

For a more detailed description of parameters, please refer to the *VLT® HVAC Drive Programming Guide, MG.11.Cx.yy*.

Real-time clock (RTC) with back-up
The data format of RTC includes year, month, date, hour, minutes and weekday.

Accuracy of clock is better than ± 20 ppm at 77° F [25° C].

On average, the built-in lithium back-up battery lasts a minimum of 10 years when the adjustable frequency drive is operating at an ambient temperature of 104° F [40° C]. If the battery back-up pack fails, the analog I/O option must be replaced.

3.6.10. Brake Resistors

In applications where the motor is used as a brake, energy is generated in the motor and sent back into the adjustable frequency drive. If the energy cannot be transported back to the motor, it will increase the voltage in the drive DC line. In applications with frequent braking and/or high inertia loads, this increase may lead to an overvoltage trip in the drive, and ultimately, a shut down. Brake resistors are used to dissipate the excess energy resulting from the regenerative braking. The resistor is selected in respect to its ohmic value, its power dissipation rate and its physical size. Danfoss offers a wide verity of different resistors that are specially designed for our drives. Code numbers can be found in the section *How to order*.

3.6.11. Remote mounting kit for LCP

The local control panel can be moved to the front of a cabinet by using the remote built-in kit. The enclosure is the IP 65. The fastening screws must be tightened with a torque of max. 1 Nm.

Technical data	
Enclosure:	IP 65 front
Max. cable length between VLT and unit:	3 m
Communication std:	RS-485

Ordering no. 130B1113

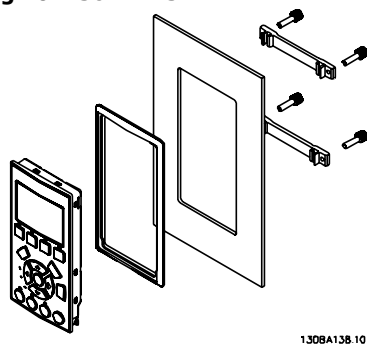

3.24: LCP kit with graphical LCP, fasteners, 9.8 ft [3 m] cable and gasket.

Ordering no. 130B1114

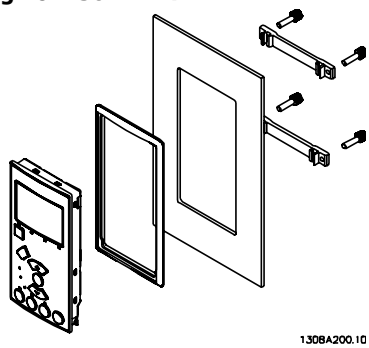

3.25: LCP kit with numerical LCP, fasteners and gasket.

LCP kit without an LCP is also available. Ordering number: 130B1117

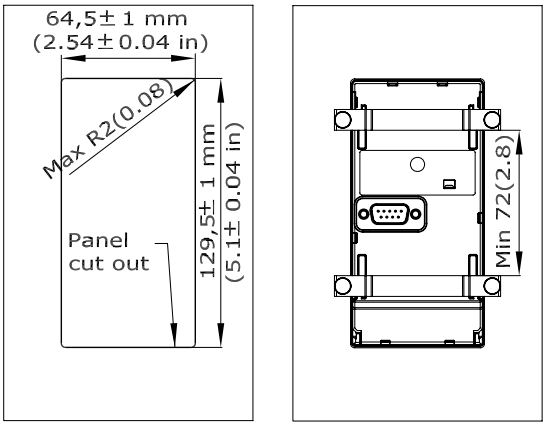

3.6.12. IP 21/IP 4X/ TYPE 1 Enclosure Kit

IP 20/IP 4X top/ TYPE 1 is an optional enclosure element available for IP 20 Compact units, enclosure size A2-A3.
If the enclosure kit is used, an IP 20 unit is upgraded to comply with enclosure IP 21/ 4X top/ TYPE 1.

The IP 4X top can be applied to all standard IP 20 VLT HVAC variants.

3.6.13. IP 21/Type 1 Enclosure Kit

A – Top cover
B – Brim
C – Base part
D – Base cover
E – Screw(s)
Place the top cover as shown. If an A or B option is used, the brim must be fitted to cover the top inlet. Place the base part C at the bottom of the drive and use the clamps from the accessory bag to correctly fasten the cables.
Holes for cable glands:
Size A2: 2x M25 and 3xM32
Size A3: 3xM25 and 3xM32

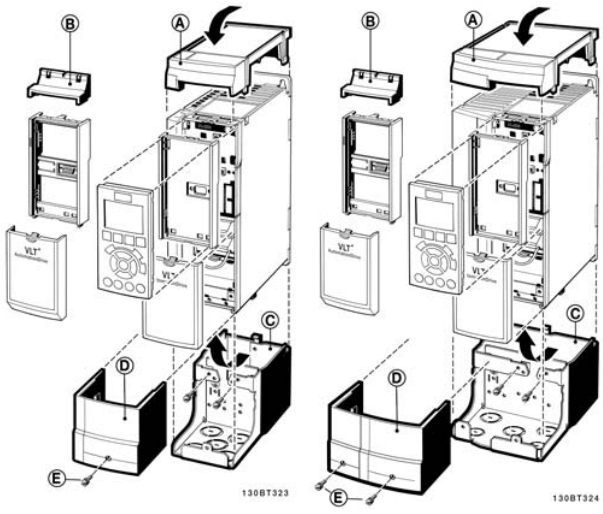

3.6.14. Output Filters

The high speed switching of the adjustable frequency drive produces some secondary effects, which influence the motor and the enclosed environment. These side effects are addressed by two different filter types, the du/dt and the sine-wave filter.

du/dt filters
Motor insulation stress is often caused by the combination of rapid voltage and current increase. The rapid energy changes can also be reflected back to the DC line in the inverter and cause shut down. The du/dt filter is designed to reduce the voltage rise time/the rapid energy change in the motor, and by that intervention, it prevents premature aging and flashover in the motor insulation. The du/dt filters have a positive influence on the radiation of magnetic noise in the cable that connects the drive to the motor. The voltage wave form is still pulse-shaped but the du/dt ratio is reduced in comparison with the installation without filter.

Sine-wave filters
Sine-wave filters are designed to allow only low frequencies to pass. High frequencies are consequently shunted away, which results in a sinusoidal phase-to-phase voltage waveform and sinusoidal current waveforms.
With the sinusoidal waveforms, the use of special adjustable frequency drive motors with reinforced insulation is no longer needed. The acoustic noise from the motor is also damped as a consequence of the wave condition.
Besides the features of the du/dt filter, the sine-wave filter also reduces insulation stress and bearing currents in the motor, thus leading to prolonged motor lifetime and longer periods between service. Sine-wave filters enable use of longer motor cables in applications where the motor is installed far from the drive. The length is unfortunately limited because the filter does not reduce leakage currents in the cables.

4

4. How to Order

4.1. Ordering form

4.1.1. Drive Configurator

It is possible to design a adjustable frequency drive according to the application requirements by using the ordering number system.

For the VLT HVAC Drive, you can order both standard drives and drives with integral options by sending a type code string describing the product to your local Danfoss sales office:

FC-102P18KT4E21H1XGCXXXSXXXXAGBKCXXXXDX

The meaning of the characters in the string can be located in the pages containing the ordering numbers in the chapter *How to Select Your VLT*. In the example above, a Profibus LON works option and a general purpose I/O option is included in the drive.

Ordering numbers for VLT HVAC Drive standard variants can also be located in the chapter *How to Select Your VLT*.

Use the Internet-based drive configurator to configure the right drive for the right application and generate the type code string. The drive configurator will automatically generate an eight-digit sales number to be delivered to your local sales office.
Furthermore, you can establish a project list with several products and send it to a Danfoss sales representative.

The drive configurator can be found on the Danfoss homepage: *www.danfoss.com/drives*.

4

4.1.2. Type Code String

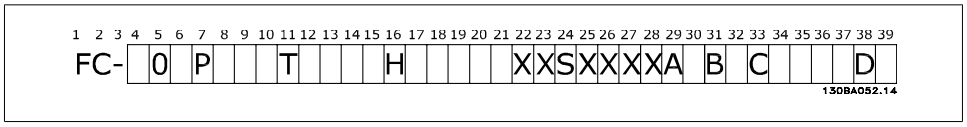

Description	Pos	Possible choice
Product group & VLT Series	1-6	FC 102
Power rating	8-10	1.5-750 hp [1.1-560 kW] (P1K1 - P560)
Number of phases	11	Three phases (T)
AC line voltage	11-12	T 2: 200-240 V AC T 4: 380-480 V AC T 6: 525-600 V AC
Enclosure	13-15	E20: IP20 E21: IP 21/NEMA Type 1 E55: IP 55/NEMA Type 12 E2M: IP 21/NEMA Type 1 w/line power shield E5M: IP 55/NEMA Type 12 w/line power shield E66: IP66 P21: IP 21/NEMA Type 1 w/backplate P55: IP 55/NEMA Type 12 w/backplate
RFI filter	16-17	H1: RFI filter class A1/B H2: RFI filter class A2 H3: RFI filter class A1/B (reduced cable length) H4: RFI filter class A2/A1
Brake	18	X: No brake chopper included B: Brake chopper included T: Safe Stop U: Safe + brake
Display	19	G: Graphical Local Control Panel (GLCP) N: Numeric Local Control Panel (NLCP) X: No Local Control Panel
Coating PCB	20	X. No coated PCB C: Coated PCB
Line option	21	X: No line power disconnect switch 1: With line power disconnect switch (IP55 only)
Adaptation	22	Reserved
Adaptation	23	Reserved
Software release	24-27	Current software
Software language	28	
A options	29-30	AX: No options A0: MCA 101 Profibus DP V1 A4: MCA 104 DeviceNet AG: MCA 108 LON works AJ: MCA 109 BAC Net
B options	31-32	BX: No option BK: MCB 101 General purpose I/O option BP: MCB 105 Relay option BO:MCB 109 Analog I/O option
C0 options MCO	33-34	CX: No options
C1 options	35	X: No options
C option software	36-37	XX: Standard software
D options	38-39	DX: No option D0: DC backup

4.1: Type code description.

The various options are described further in the *VLT® HVAC Drive Design Guide, MG.11.Bx.yy*.

4.2. Ordering Numbers

4.2.1. Ordering Numbers: Options and Accessories

Type	Description	Ordering no.	
Miscellaneous hardware			
DC link connector	Terminal block for DC link connection on frame size A2/A3	130B1064	
IP 21/4X top/TYPE 1 kit	Enclosure, frame size A2: IP 21/IP 4X Top/TYPE 1	130B1122	
IP 21/4X top/TYPE 1 kit	Enclosure, frame size A3: IP 21/IP 4X Top/TYPE 1	130B1123	
Profibus D-Sub 9	Connector kit for IP 20	130B1112	
Profibus top entry kit	Top entry kit for Profibus connection - only A enclosures	130B0524[1)]	
Terminal blocks	Screw terminal blocks for replacing spring loaded terminals 1 x 10-pin, 1 x 6-pin and 1 x 3-pin connectors	130B1116	
LCP			
LCP 101	Numerical Local Control Panel (NLCP)	130B1124	
LCP 102	Graphical Local Control Panel (GLCP)	130B1107	
LCP cable	Separate LCP cable, 9.8 ft. [3 m]	175Z0929	
LCP kit	Panel mounting kit including graphical LCP, fasteners, 9.8 ft. [3 m] cable and gasket	130B1113	
LCP kit	Panel mounting kit including numerical LCP, fasteners and gasket	130B1114	
LCP kit	Panel mounting kit for all LCPs including fasteners, 9.8 ft. [3 m] cable and gasket	130B1117	
Options for Slot A Uncoated/Coated		**Uncoated**	**Coated**
MCA 101	Profibus option DP V0/V1	130B1100	130B1200
MCA 104	DeviceNet option	130B1102	130B1202
MCA 108	LON works	130B1106	130B1206
Options for Slot B			
MCB 101	General purpose Input/Output option	130B1125	
MCB 105	Relay option	130B1110	
MCB 109	Analog I/O option	130B1143	130B1243
Option for Slot D			
MCB 107	24 V DC back-up	130B1108	130B1208
External Options			
Ethernet IP	Ethernet master	175N2584	
Spare Parts			
Control board VLT HVAC Drive	With Safe Stop Function		130B1150
Control board VLT HVAC Drive	Without Safe Stop Function		130B1151
Fan A2	Fan, frame size A2	130B1009	
Fan A3	Fan, frame size A3	130B1010	
Fan A5	Fan, frame size A3	130B1017	
Fan B1	Fan external, frame size B1	130B1013	
Fan B2	Fan external, frame size B2	130B1015	
Fan C1	Fan external, frame size C1	130B3865	
Fan C2	Fan external, frame size C2	130B3867	
Accessory bag A2	Accessory bag, frame size A2	130B0509	
Accessory bag A3	Accessory bag, frame size A3	130B0510	
Accessory bag A5	Accessory bag, frame size A5	130B1023	
Accessory bag B1	Accessory bag, frame size B1	130B2060	
Accessory bag B2	Accessory bag, frame size B2	130B2061	
Accessory bag C1	Accessory bag, frame size C1	130B0046	
Accessory bag C2	Accessory bag, frame size C2	130B0047	

4.2: 1) Only IP 21 / > 14.75 HP [11 kW]

Options can be ordered as factory built-in options; see ordering information.

For information on serial communication bus and application option compatibility with older software versions, please contact your Danfoss supplier.

4.2.2. Ordering Numbers: Harmonic Filters

Harmonic filters are used to reduce line harmonics.

- AHF 010: 10% current distortion
- AHF 005: 5% current distortion

380-415 V, 50 Hz

$I_{AHF,N}$	Typical Motor Used [kW]	Danfoss ordering number		Adjustable frequency drive size
		AHF 005	AHF 010	
10 A	1.1 - 4	175G6600	175G6622	P1K1, P4K0
19 A	5.5 - 7.5	175G6601	175G6623	P5K5 - P7K5
26 A	11	175G6602	175G6624	P11K
35 A	15 - 18.5	175G6603	175G6625	P15K - P18K
43 A	22	175G6604	175G6626	P22K
72 A	30 - 37	175G6605	175G6627	P30K - P37K
101A	45 - 55	175G6606	175G6628	P45K - P55K
144 A	75	175G6607	175G6629	P75K
180 A	90	175G6608	175G6630	P90K
217 A	110	175G6609	175G6631	P110
289 A	132 - 160	175G6610	175G6632	P132 - P160
324 A		175G6611	175G6633	
370 A	200	175G6688	175G6691	P200
434 A	250	2x 175G6609	2x 175G6631	P250
578 A	315	2x 175G6610	2x 175G6632	P315
613 A	350	175G6610 + 175G6611	175G6632 + 175G6633	P350

440-480 V, 60 Hz

$I_{AHF,N}$	Typical Motor Used [HP]	Danfoss ordering number		Adjustable frequency drive size
		AHF 005	AHF 010	
19 A	7.5 - 15	175G6612	175G6634	P7K5 - P11K
26 A	20	175G6613	175G6635	P15K
35 A	25 - 30	175G6614	175G6636	P18K, P22K
43 A	40	175G6615	175G6637	P30K
72 A	50 - 60	175G6616	175G6638	P30K - P37K
101A	75	175G6617	175G6639	P45K - P55K
144 A	100 - 125	175G6618	175G6640	P75K - P90K
180 A	150	175G6619	175G6641	P110
217 A	200	175G6620	175G6642	P132
289 A	250	175G6621	175G6643	P160
324 A	300	175G6689	175G6692	P200
370 A	350	175G6690	175G6693	P250
506 A	450	175G6620 + 175G6621	175G6642 + 175G6643	P315
578 A	500	2x 175G6621	2x 175G6643	P355

Matching the adjustable frequency drive and filter is pre-calculated based on 400 V/480 V, a typical motor load (4-pole) and 110% torque.

500-525 V, 50Hz

$I_{AHF,N}$	Typical Motor Used [kW]	Danfoss ordering number		Adjustable frequency drive size
		AHF 005	AHF 010	
10 A	1.1 - 5.5	175G6644	175G6656	P4K0 - P5K5
19 A	7.5 - 11	175G6645	175G6657	P7K5

690 V, 50Hz

$I_{AHF,N}$	Typical Motor Used [kW]	Danfoss ordering number		Adjustable frequency drive size
		AHF 005	AHF 010	
144 A	110, 132	130B2333	130B2298	P110
180 A	160	130B2334	130B2299	P132
217 A	200	130B2335	130B2300	P160
289 A	250	130B2331+2333	130B2301	P200
324 A	315	130B2333+2334	130B2302	P250
370 A	400	130B2334+2335	130B2304	P315

4

4.2.3. Ordering Numbers:Sine-Wave Filter Modules, 200-500 V AC

Line supply 3 x 200 to 500 V

Adjustable frequency drive size			Minimum switching frequency	Maximum output frequency	Part No. IP 20	Part No. IP 00	Rated filter current at 50 Hz
200-240 V	**380-440 V**	**440-500 V**					
PK25	PK37	PK37	5 kHz	120 Hz	130B2439	130B2404	2.5 A
PK37	PK55	PK55	5 kHz	120 Hz	130B2439	130B2404	2.5 A
	PK75	PK75	5 kHz	120 Hz	130B2439	130B2404	2.5 A
PK55	P1K1	P1K1	5 kHz	120 Hz	130B2441	130B2406	4.5 A
	P1K5	P1K5	5 kHz	120 Hz	130B2441	130B2406	4.5 A
PK75	P2K2	P2K2	5 kHz	120 Hz	130B2443	130B2408	8 A
P1K1	P3K0	P3K0	5 kHz	120 Hz	130B2443	130B2408	8 A
P1K5			5 kHz	120 Hz	130B2443	130B2408	8 A
	P4K0	P4K0	5 kHz	120 Hz	130B2444	130B2409	10 A
P2K2	P5K5	P5K5	5 kHz	120 Hz	130B2446	130B2411	17 A
P3K0	P7K5	P7K5	5 kHz	120 Hz	130B2446	130B2411	17 A
P4K0			5 kHz	120 Hz	130B2446	130B2411	17 A
P5K5	P11K	P11K	4 kHz	60 Hz	130B2447	130B2412	24 A
P7K5	P15K	P15K	4 kHz	60 Hz	130B2448	130B2413	38 A
	P18K	P18K	4 kHz	60 Hz	130B2448	130B2413	38 A
P11K	P22K	P22K	4 kHz	60 Hz	130B2307	130B2281	48 A
P15K	P30K	P30K	3 kHz	60 Hz	130B2308	130B2282	62 A
P18K	P37K	P37K	3 kHz	60 Hz	130B2309	130B2283	75 A
P22K	P45K	P55K	3 kHz	60 Hz	130B2310	130B2284	115 A
P30K	P55K	P75K	3 kHz	60 Hz	130B2310	130B2284	115 A
P37K	P75K	P90K	3 kHz	60 Hz	130B2311	130B2285	180 A
P45K	P90K	P110	3 kHz	60 Hz	130B2311	130B2285	180 A
	P110	P132	3 kHz	60 Hz	130B2312	130B2286	260 A
	P132	P160	3 kHz	60 Hz	130B2312	130B2286	260 A
	P160	P200	3 kHz	60 Hz	130B2313	130B2287	410 A
	P200	P250	3 kHz	60 Hz	130B2313	130B2287	410 A
	P250	P315	3 kHz	60 Hz	130B2314	130B2288	480 A
	P315	P355	2 kHz	60 Hz	130B2315	130B2289	660 A
	P355	P400	2 kHz	60 Hz	130B2315	130B2289	660 A
	P400	P450	2 kHz	60 Hz	130B2316	130B2290	750 A
	P450	P500	2 kHz	60 Hz	130B2317	130B2291	880 A
	P500	P560	2 kHz	60 Hz	130B2317	130B2291	880 A
	P560	P630	2 kHz	60 Hz	130B2318	130B2292	1200 A
	P630	P710	2 kHz	60 Hz	130B2318	130B2292	1200 A

NOTE
When using sine-wave filters, the switching frequency should comply with filter specifications in par. 14-01 *Switching Frequency*.

4.2.4. Ordering Numbers:Sine-Wave Filter Modules, 525-600 VAC

Line supply 3 x 525 to 690 V

Adjustable frequency drive size		Minimum switching frequency	Maximum output frequency	Part No. IP20	Part No. IP00	Rated filter current at 50 Hz
525-600 V	**600 V**					
PK75		2 kHz	60 Hz	130B2341	130B2321	13 A
P1K1		2 kHz	60 Hz	130B2341	130B2321	13 A
P1K5		2 kHz	60 Hz	130B2341	130B2321	13 A
P2k2		2 kHz	60 Hz	130B2341	130B2321	13 A
P3K0		2 kHz	60 Hz	130B2341	130B2321	13 A
P4K0		2 kHz	60 Hz	130B2341	130B2321	13 A
P5K5		2 kHz	60 Hz	130B2341	130B2321	13 A
P7K5		2 kHz	60 Hz	130B2341	130B2321	13 A
	P11K	2 kHz	60 Hz	130B2342	130B2322	28 A
P11K	P15K	2 kHz	60 Hz	130B2342	130B2322	28 A
P15K	P18K	2 kHz	60 Hz	130B2342	130B2322	28 A
P18K	P22K	2 kHz	60 Hz	130B2342	130B2322	28 A
P22K	P30K	2 kHz	60 Hz	130B2343	130B2323	45 A
P30K	P37K	2 kHz	60 Hz	130B2343	130B2323	45 A
P37K	P45K	2 kHz	60 Hz	130B2344	130B2324	76 A
P45K	P55K	2 kHz	60 Hz	130B2344	130B2324	76 A
P55K	P75K	2 kHz	60 Hz	130B2345	130B2325	115 A
P75K	P90K	2 kHz	60 Hz	130B2345	130B2325	115 A
P90K	P110	2 kHz	60 Hz	130B2346	130B2326	165 A
P110	P132	2 kHz	60 Hz	130B2346	130B2326	165 A
P150	P160	2 kHz	60 Hz	130B2347	130B2327	260 A
P180	P200	2 kHz	60 Hz	130B2347	130B2327	260 A
P220	P250	2 kHz	60 Hz	130B2348	130B2329	303 A
P260	P315	1.5 kHz	60 Hz	130B2270	130B2241	430 A
P300	P400	1.5 kHz	60 Hz	130B2270	130B2241	430 A
P375	P500	1.5 kHz	60 Hz	130B2271	130B2242	530 A
P450	P560	1.5 kHz	60 Hz	130B2381	130B2337	660 A
P480	P630	1.5 kHz	60 Hz	130B2381	130B2337	660 A
P560	P710	1.5 kHz	60 Hz	130B2382	130B2338	765 A
P670	P800	1.5 kHz	60 Hz	130B2383	130B2339	940 A
	P900	1.5 kHz	60 Hz	130B2383	130B2339	940 A
P820	P1M0	1.5 kHz	60 Hz	130B2384	130B2340	1320 A
P970	P1M2	1.5 kHz	60 Hz	130B2384	130B2340	1320 A

NOTE
When using sine-wave filters, the switching frequency should comply with filter specifications in par. 14-01 *Switching Frequency*.

4.2.5. Ordering Numbers:du/dt Filters, 380-480 VAC

Line supply 3x380 to 3x480 V

Adjustable frequency drive size		Minimum switching frequency	Maximum output frequency	Part No. IP20	Part No. IP00	Rated filter current at 50 Hz
380-440V	**44-480V**					
15 hp [11 kW]	15 hp [11 kW]	4 kHz	60 Hz	130B2396	130B2385	24 A
20 hp [15 kW]	20 hp [15 kW]	4 kHz	60 Hz	130B2397	130B2386	45 A
25 hp [18.5 kW]	25 hp [18.5 kW]	4 kHz	60 Hz	130B2397	130B2386	45 A
30 hp [22 kW]	30 hp [22 kW]	4 kHz	60 Hz	130B2397	130B2386	45 A
40 hp [30 kW]	40 hp [30 kW]	3 kHz	60 Hz	130B2398	130B2387	75 A
50 hp [37 kW]	50 hp [37 kW]	3 kHz	60 Hz	130B2398	130B2387	75 A
60 hp [45 kW]	75 hp [55 kW]	3 kHz	60 Hz	130B2399	130B2388	110 A
75 hp [55 kW]	100 hp [75 kW]	3 kHz	60 Hz	130B2399	130B2388	110 A
100 hp [75 kW]	125 hp [90 kW]	3 kHz	60 Hz	130B2400	130B2389	182 A
125 hp [90 kW]	150 hp [110 kW]	3 kHz	60 Hz	130B2400	130B2389	182 A
150 hp [110 kW]	175 hp [132 kW]	3 kHz	60 Hz	130B2401	130B2390	280 A
175 hp [132 kW]	250 hp [160 kW]	3 kHz	60 Hz	130B2401	130B2390	280 A
250 hp [160 kW]	300 hp [200 kW]	3 kHz	60 Hz	130B2402	130B2391	400 A
300 hp [200 kW]	350 hp [250 kW]	3 kHz	60 Hz	130B2402	130B2391	400 A
350 hp [250 kW]	450 hp [315 kW]	3 kHz	60 Hz	130B2277	130B2275	500 A
450 hp [315 kW]	500 hp [355 kW]	2 kHz	60 Hz	130B2278	130B2276	750 A
500 hp [355 kW]	550 hp [400 kW]	2 kHz	60 Hz	130B2278	130B2276	750 A
550 hp [400 kW]	600 hp [450 kW]	2 kHz	60 Hz	130B2278	130B2276	750 A
600 hp [450 kW]	675 hp [500 kW]	2 kHz	60 Hz	130B2405	130B2393	910 A
675 hp [500 kW]	750 hp [560 kW]	2 kHz	60 Hz	130B2405	130B2393	910 A
750 hp [560 kW]	850 hp [630 kW]	2 kHz	60 Hz	130B2407	130B2394	1500 A
850 hp [630 kW]	950 hp [710 kW]	2 kHz	60 Hz	130B2407	130B2394	1500 A
950 hp [710 kW]	1075 hp [800 kW]	2 kHz	60 Hz	130B2407	130B2394	1500 A
1075 hp [800 kW]	1350 hp [1000 kW]	2 kHz	60 Hz	130B2407	130B2394	1500 A
1350 hp [1000 kW]	1475 hp [1100 kW]	2 kHz	60 Hz	130B2410	130B2395	2300 A

4.2.6. Ordering Numbers:du/dt Filters, 525-600 VAC

Line supply 3x525 to 3x600 V

Adjustable frequency drive size		Minimum switching frequency	Maximum output frequency	Part No. IP20	Part No. IP00	Rated filter current at 50 Hz
525-600 V	**600 V**					
	15 hp [11 kW]	4 kHz	60 Hz	130B2423	130B2414	28 A
15 hp [11 kW]	20 hp [15 kW]	4 kHz	60 Hz	130B2423	130B2414	28 A
20 hp [15 kW]	25 hp [18.5 kW]	4 kHz	60 Hz	130B2423	130B2414	28 A
25 hp [18.5 kW]	30 hp [22 kW]	4 kHz	60 Hz	130B2423	130B2414	28 A
30 hp [22 kW]	40 hp [30 kW]	4 kHz	60 Hz	130B2424	130B2415	45 A
40 hp [30 kW]	50 hp [37 kW]	4 kHz	60 Hz	130B2424	130B2415	45 A
50 hp [37 kW]	60 hp [45 kW]	3 kHz	60 Hz	130B2425	130B2416	75 A
60 hp [45 kW]	75 hp [55 kW]	3 kHz	60 Hz	130B2425	130B2416	75 A
75 hp [55 kW]	100 hp [75 kW]	3 kHz	60 Hz	130B2426	130B2417	115 A
100 hp [75 kW]	125 hp [90 kW]	3 kHz	60 Hz	130B2426	130B2417	115 A
125 hp [90 kW]	150 hp [110 kW]	3 kHz	60 Hz	130B2427	130B2418	165 A
150 hp [110 kW]	175 hp [132 kW]	3 kHz	60 Hz	130B2427	130B2418	165 A
200 hp [150 kW]	250 hp [160 kW]	3 kHz	60 Hz	130B2428	130B2419	260 A
240 hp [180 kW]	300 hp [200 kW]	3 kHz	60 Hz	130B2428	130B2419	260 A
300 hp [220 kW]	350 hp [250 kW]	3 kHz	60 Hz	130B2429	130B2420	310 A
350 hp [260 kW]	450 hp [315 kW]	3 kHz	60 Hz	130B2278	130B2235	430 A
400 hp [300 kW]	550 hp [400 kW]	3 kHz	60 Hz	130B2278	130B2235	430 A
500 hp [375 kW]	675 hp [500 kW]	2 kHz	60 Hz	130B2239	130B2236	530 A
600 hp [450 kW]	750 hp [560 kW]	2 kHz	60 Hz	130B2274	130B2280	630 A
640 hp [480 kW]	850 hp [630 kW]	2 kHz	60 Hz	130B2274	130B2280	630 A
750 hp [560 kW]	950 hp [710 kW]	2 kHz	60 Hz	130B2430	130B2421	765 A
900 hp [670 kW]	1075 hp [800 kW]	2 kHz	60 Hz	130B2431	130B2422	1350 A
	1200 hp [900 kW]	2 kHz	60 Hz	130B2431	130B2422	1350 A
1100 hp [820 kW]	1350 hp [1000 kW]	2 kHz	60 Hz	130B2431	130B2422	1350 A
1300 hp [970 kW]	1600 hp [1200 kW]	2 kHz	60 Hz	130B2431	130B2422	1350 A

5. How to Install

5.1. Mechanical Installation

	A2/A3	A5*/B1/C1/B2/C2	D1/D2	D3/D4	E1	E2	F1/F2
				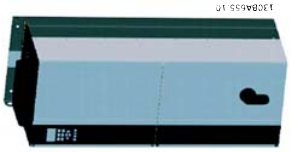			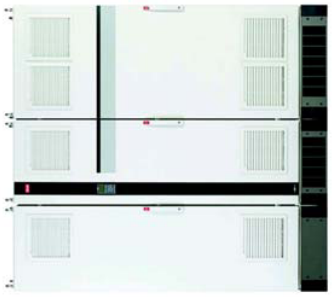
IP 20/21	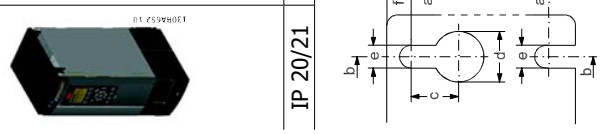	IP 21/54/55/66 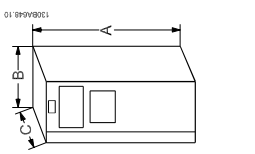	IP 21/54/55/66 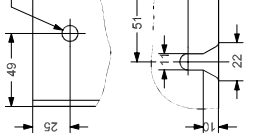	IP 00 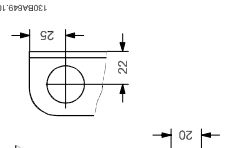	IP 21/54/55/66 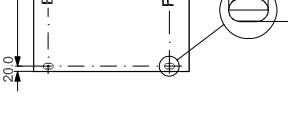	IP 00 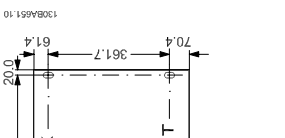	IP 21/54/55/66
	All measurements in mm. * A5 in IP 54/55/66 only!		Top left: Top mounting hole.	Lower: Bottom mounting hole.	Base plate mount.		(Please contact Danfoss!)

Mechanical dimensions

Frame size		**A2**		**A3**		**A5**	**B1**	**B2**	**C1**	**C2**	**D1**	**D2**	**D3**	**D4**	**E1**	**E2**
200-240 V 380-480 V 525-600 V		**1.5-4 hp [1.1-3 kW] 3-5 hp [2.2-4 kW] 1.5-5 hp [1.1-4 kW]**		**4-5 hp [3-3.7 kW] 7.5-10 hp [5.5-7.5 kW] 7.5-10 hp [5.5-7.5 kW]**		**1.5-5 hp [1.1-3.7 kW] 1.5-10 hp [1.1-7.5 kW] 1.5-10 hp [1.1-7.5 kW]**	**7.5-15 hp [5.5-11 kW] 15-25 hp [11-18.5 kW]**	**20 hp [15 kW] 30-40 hp [22-30 kW]**	**25-30 hp [18.5-22 kW] 50-75 hp [37-55 kW]**	**40-60 hp [30-45 kW] 100-125 hp [75-90 kW]**	**150-175 hp [110-132 kW] 150-175 hp [110-132 kW]**	**250-350 hp [160-250 kW] 250-450 hp [160-315 kW]**	**150-175 hp [110-132 kW] 150-175 hp [110-132 kW]**	**250-350 hp [160-250 kW] 250-450 hp [160-315 kW]**	**450-600 hp [315-450 kW] 500-750 hp [355-560 kW]**	**450-600 hp [315-450 kW] 500-750 hp [355-560 kW]**
IP NEMA		20 Chassis	21 Type 1	20 Chassis	21 Type 1	55/66 Type 12	21/ 55/66 Type 1/12	21/55/66 Type 1/12	21/55/66 Type 1/12	21/55/66 Type 1/12	21/54 Type 1/12	21/54 Type 1/12	00 Type 1	00 Type 1	21/54 Type 1/12	00 Type 1
Height (mm)																
Backplate	A	268	375	268	375	420	480	650	680	770	1159	1540	997	1277	2000	1499
De-coupling plate	A	373.79	-	373.79	-	-	-	-	-	-	-	-	-	-	-	-
Distance between mount. holes	a	257	350	257	350	402	454	624	648	739						
Width (mm)																
Backplate	B	90	90	130	130	242	242	242	308	370	420	420	408	408	600	585
With one C option	B	130	130	170	170	242	242	242	308	370						
With two C options	B	150	150	190	190	242	242	242	308	370						
Distance between mount. holes	b	70	70	110	110	215	210	210	272	334						
Depth (mm)																
Without option A/B	C	205	205	205	205	195	260	260	310	335	373	373	373	373	494	494
With option A/B	C	220	220	220	220	195	260	260	310	335	373	373	373	373	494	494
Without option A/B	D*	-	207	-	207	-	-	-	-	-	-	-	-	-	-	-
With option A/B	D*	-	222	-	222	-	-	-	-	-	-	-	-	-	-	-
Screw holes (mm)																
	c	8.0	8.0	8.0	8.0	8.2	12	12	12	12						
Diameter ø	d	11	11	11	11	12	19	19	19	19						
Diameter ø	e	5.5	5.5	5.5	5.5	6.5	9	9	9.8	9.8	11	11	11	11	14	14
	f	9	9	9	9	9	9	9	17.6	18						
Max weight (kg)		4.9	5.3	6.6	7.0	13.5 14.2	23	27	43	61	104	151	91	138	313	277

* The front of the adjustable frequency drive is slightly convex. C is the shortest distance from back to front (measured from corner to corner) of the adjustable frequency drive. D is the longest distance from back to front (measured in the middle) of the adjustable frequency drive.

5.1.1. Accessory Bag

Find the following parts included in the FC 100/300 Accessory Bag.

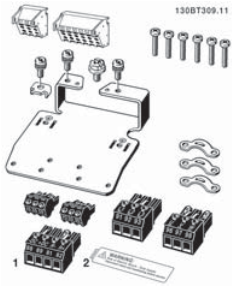

Frame sizes A1, A2 and A3
IP 20/Chassis

Frame size A5
IP 55/Type 12

Frame sizes B1 and B2
IP 21/IP 55/Type 1/Type 12

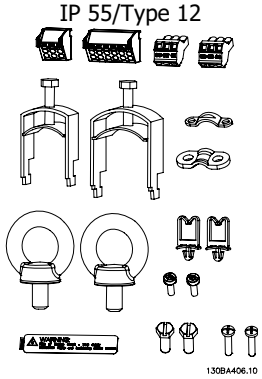

Frame sizes C1 and C2
IP 55/66/Type 1/Type 12

1 + 2 only available in units with brake chopper. Only one relay connector is included for FC 101/301 units. For DC link connection (Load sharing), the connector 1 can be ordered separately (Code no 130B1064).
An eight-pole connector is included in the accessory bag for the FC 101/301 without Safe Stop.

5.1.2. Mechanical mounting

1. Drill holes in accordance with the measurements given.
2. You must provide screws suitable for the surface on which you want to mount the adjustable frequency drive. Retighten all four screws.

The adjustable frequency drive allows side-by-side installation. Because of the need for cooling, allow for a minimum of 3.9 in [100 mm] free air passage above and below the adjustable frequency drive.

The back wall must always be solid.

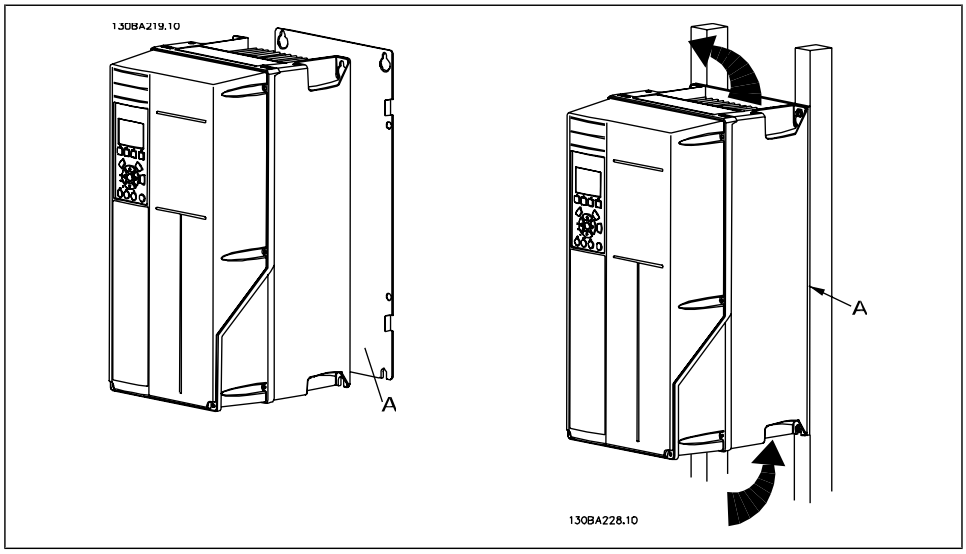

5.1.3. Safety Requirements of Mechanical Installation

Pay attention to the requirements that apply to integration and the field mounting kit. Follow the information in the list to avoid serious damage or injury, especially when installing large units.

The adjustable frequency drive is cooled by air circulation.
To protect the unit from overheating, it must be ensured that the ambient temperature *does not exceed the maximum temperature stated for the adjustable frequency drive*, and that the 24-hour average temperature *is not exceeded*. Locate the maximum temperature and 24-hour average in the paragraph *Derating for Ambient Temperature*.
If the ambient temperature is in the range of 113°-131°F [45°-55°C], derating of the adjustable frequency drive will become relevant, see *Derating for Ambient Temperature*.
The service life of the adjustable frequency drive is reduced if derating for ambient temperature is not taken into account.

5.1.4. Field Mounting

For field mounting, the IP 21/IP 4X top/TYPE 1 kits or IP 54/55 units (planned) are recommended.

5.2. Electrical Installation

5.2.1. Cables General

NOTE
For the VLT High Power series line power and motor connections, please see VLT HVAC Drive High Power Instruction Manual, MG.11.F1.02.

NOTE
Cables General
Always comply with national and local regulations on cable cross-sections.

5

Details of terminal tightening torques.

	Power (kW)			Torque (Nm)					
Enclosure	**200-240 V**	**380-480 V**	**525-600 V**	**Line**	**Motor**	**DC connection**	**Brake**	**Ground**	**Relay**
A2	1.1 - 3.0	1.1 - 4.0	1.1 - 4.0	1.8	1.8	1.8	1.8	3	0.6
A3	3.7	5.5 - 7.5	5.5 - 7.5	1.8	1.8	1.8	1.8	3	0.6
A5	1.1 - 3.7	1.1 - 7.5	1.1 - 7.5	1.8	1.8	1.8	1.8	3	0.6
B1	5.5 - 11	11 - 18.5	-	1.8	1.8	1.5	1.5	3	0.6
B2	- 15	22 30	- -	2.5 4.5	2.5 4.5	3.7 3.7	3.7 3.7	3 3	0.6 0.6
C1	18.5 - 30	37 - 55	-	10	10	10	10	3	0.6
C2	37 45	75 90	- -	14 24	14 24	14 14	14 14	3 3	0.6 0.6
D1/D3	-	110 132	110 132	19 19	19 19	9.6 9.6	9.6 9.6	19	0.6
D2/D4	-	160-250	160-315	19	19	9.6	9.6	19	0.6
E1/E2	-	315-450	355-560	19	19	19	9.6	19	0.6

5.1: Tightening of terminals

5.2.2. Removal of Knockouts for Extra Cables

1. Remove the cable entry from the adjustable frequency drive (prevent foreign parts from falling into the adjustable frequency drive when removing knockouts)
2. The cable entry must be supported around the knockout you intend to remove.
3. The knockout can now be removed with a strong mandrel and a hammer.
4. Remove burrs from the hole.
5. Mount cable entry on adjustable frequency drive.

5.2.3. Connection to Line Power and Grounding

NOTE
The plug connector for power can be removed.

1. Make sure the adjustable frequency drive is properly grounded. Connect to ground connection (terminal 95). Use the screw from the accessory bag.
2. Place plug connector 91, 92, 93 from the accessory bag onto the terminals labeled LINE at the bottom of the adjustable frequency drive.
3. Connect line power wires to the line plug connector.

The ground connection cable cross-section must be at least 0.016 in.^{2} [10 mm^2] or have 2 rated line supply wires terminated separately according to EN 50178.

The line supply connection is fitted to the line supply switch, if one is included.

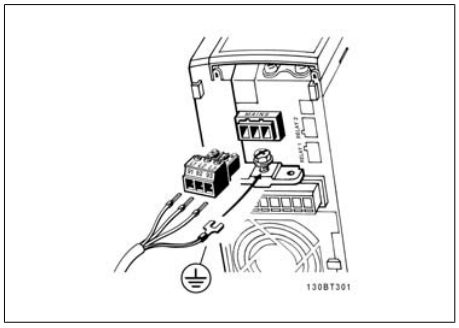

5.1: How to connect to the line supply and grounding (A2 and A3 enclosure).

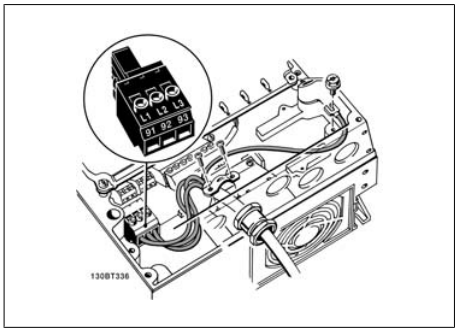

5.2: How to connect to the line supply and grounding (A5 enclosure).

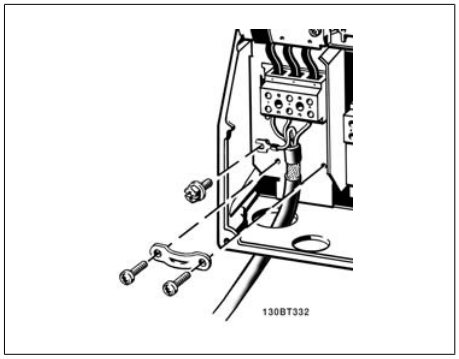

5.3: How to connect to the line supply and grounding (B1 and B2 enclosure).

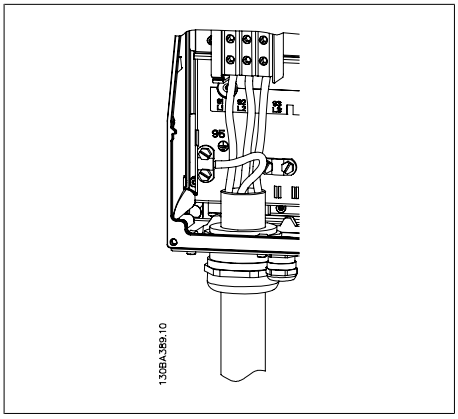

5.4: How to connect to the line supply and grounding (C1 and C2 enclosure).

NOTE
Make sure that the line voltage corresponds to the line voltage of the adjustable frequency drive nameplate.

IT Line
Do not connect 400 V adjustable frequency drives with RFI filters to line supplies with a voltage between phase and ground of more than 440 V.
For IT lines and delta ground (grounded leg), line voltage may exceed 440 V between phase and ground.

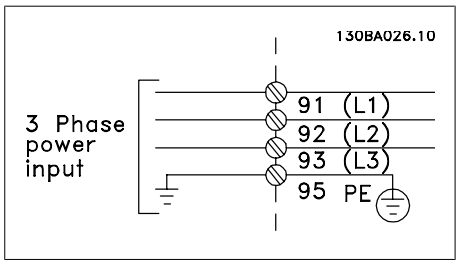

5.5: Terminals for line supply and grounding.

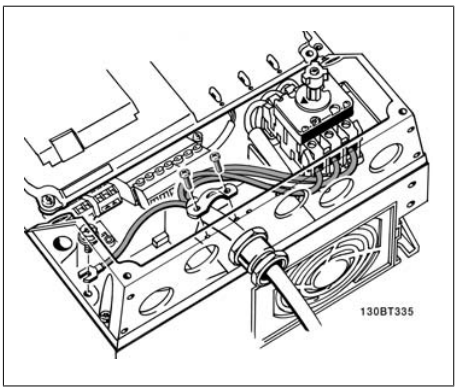

5.6: How to connect to the line supply and grounding with disconnector (A5 enclosure).

5.2.4. Motor Connection

NOTE
Motor cable must be shielded/armored. The use of an unshielded/unarmored cable is against EMC requirements. For more information, see *EMC specifications*.

1. Fasten a decoupling plate to the bottom of the adjustable frequency drive with screws and washers from the accessory bag.

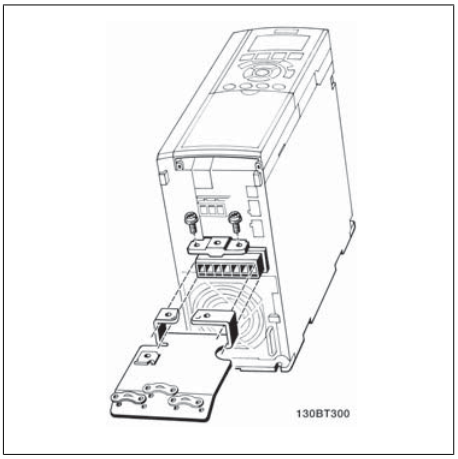

5.7: Mounting of decoupling plate

5

2. Attach motor cable to terminals 96 (U), 97 (V), 98 (W).
3. Connect to ground connection (terminal 99) on decoupling plate with screws from the accessory bag.
4. Insert terminals 96 (U), 97 (V), 98 (W) and motor cable to terminals labeled MOTOR.
5. Fasten shielded cable to the decoupling plate with screws and washers from the accessory bag.

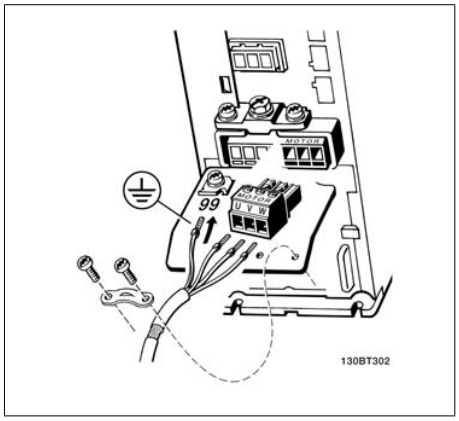

5.8: Motor connection for enclosures A2 and A3

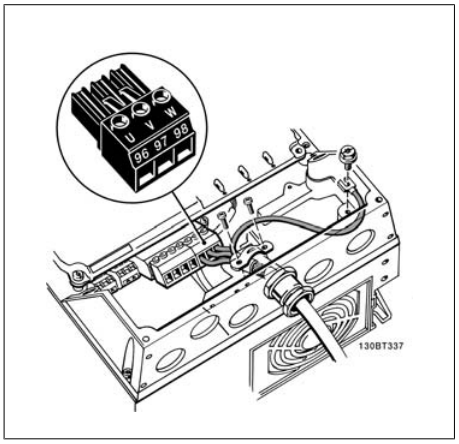

5.9: Motor connection for enclosure A5

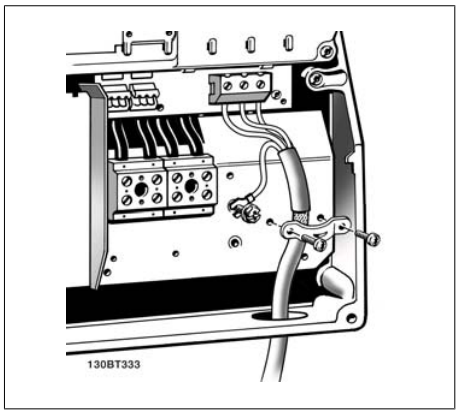

5.10: Motor connection for enclosure B1 and B2

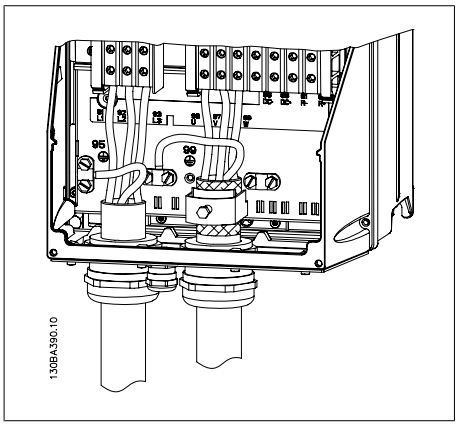

5.11: Motor connection for enclosure C1 and C2

All types of three-phase asynchronous standard motors can be connected to the adjustable frequency drive. Normally, small motors are star-connected (230/400 V, D/Y). Large motors are delta-connected (400/600 V, D/Y). Refer to the motor nameplate for correct connection mode and voltage.

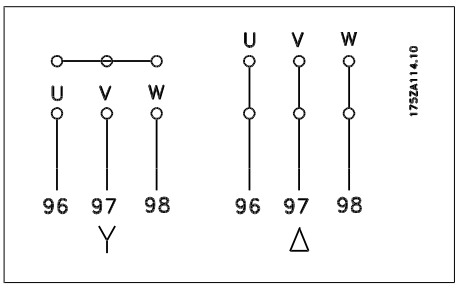

NOTE
In motors without phase insulation paper or other insulation reinforcement suitable for operation with voltage supply (such as an adjustable frequency drive), fit a sine-wave filter on the output of the adjustable frequency drive.

No.	96	97	98	Motor voltage 0-100%
	U	V	W	of AC line voltage.
				3 wires out of motor
	U1	V1	W1	6 wires out of motor, Delta-connected
	W2	U2	V2	
	U1	V1	W1	6 wires out of motor, Star-connected
				U2, V2, W2 to be interconnected separately
				(optional terminal block)
No.	99			Ground connection
	PE			

5

5.2.5. Motor Cables

See section *General Specifications* for correct dimensioning of motor cable cross-section and length.

- Use a shielded/armored motor cable to comply with EMC emission specifications.
- Keep the motor cable as short as possible to reduce the noise level and leakage currents.
- Connect the motor cable shield to both the decoupling plate of the adjustable frequency drive and to the metal cabinet of the motor.
- Make the shield connections with the largest possible surface area (cable clamp). This is done by using the supplied installation devices in the adjustable frequency drive.
- Avoid mounting with twisted shield ends (pigtails), which will spoil high frequency shielding effects.
- If it is necessary to split the shield to install a motor isolator or motor relay, the shield must be continued with the lowest possible HF impedance.

5.2.6. Electrical Installation of Motor Cables

Shielding of cables
Avoid installation with twisted shield ends (pigtails). They spoil the shielding effect at higher frequencies.
If it is necessary to break the shield to install a motor isolator or motor contactor, the shield must be continued at the lowest possible HF impedance.

Cable length and cross-section
The adjustable frequency drive has been tested with a given length of cable and a given cross-section of that cable. If the cross-section is increased, the cable capacitance - and thus the leakage current - may increase, thereby requiring that the cable length is reduced accordingly.

Switching frequency
When adjustable frequency drives are used together with sine-wave filters to reduce the acoustic noise from a motor, the switching frequency must be set according to the sine-wave filter instructions in par. 14-01.

Aluminum conductors
Aluminum conductors are not recommended. Terminals can accept aluminum conductors, but the conductor surface has to be clean, oxidation must be removed, and the area must be sealed by neutral acid-free Vaseline grease before the conductor is connected.
Furthermore, the terminal screw must be retightened after two days due to the softness of the aluminum. It is crucial to keep the connection a gas-tight joint, otherwise the aluminum surface will oxidize again.

5.2.7. Fuses

Branch circuit protection
In order to protect the installation against electrical and fire hazards, all branch circuits in an installation - the switch gear, machines, etc. - must be protected from both short circuit and overcurrent in accordance with national/international regulations.

Short circuit protection
The adjustable frequency drive must be protected against short circuit in order to prevent electrical or fire hazard. Danfoss recommends using the fuses mentioned in tables 4.3 and 4.4 in order to protect service personnel and equipment in case of an internal failure in the unit. The adjustable frequency drive provides full short circuit protection in case of a short circuit in the motor output.

Overcurrent protection
Provide overload protection to avoid fire hazard due to overheating of the cables in the installation. Overcurrent protection must always be provided in accordance with national regulations. The adjustable frequency drive is equipped with internal overcurrent protection that can be used for upstream overload protection (UL applications excluded). See *VLT® HVAC Drive Programming Guide, par. 4-18*. Fuses must be designed for protection in a circuit capable of supplying a maximum of 100,000 A_{rms} (symmetrical), 500 V / 600 V maximum.

Non-UL compliance
If UL/cUL is not to be complied with, Danfoss recommends using the fuses mentioned in table 4.2, which will ensure compliance with EN50178:
In case of malfunction, not following the recommendation may result in unnecessary damage to the adjustable frequency drive.

Frequency drive	Max. fuse size	Voltage	Type
200-240 V			
K25-K75	10A[1]	200-240 V	type gG
1K1-1K5	16A[1]	200-240 V	type gG
2K2	25A[1]	200-240 V	type gG
3K0	25A[1]	200-240 V	type gG
3K7	35A[1]	200-240 V	type gG
5K5	50A[1]	200-240 V	type gG
7K5	63A[1]	200-240 V	type gG
11K	63A[1]	200-240 V	type gG
15K	80A[1]	200-240 V	type gG
18K5	125A[1]	200-240 V	type gG
22K	125A[1]	200-240 V	type gG
30K	160A[1]	200-240 V	type gG
37K	200A[1]	200-240 V	type aR
45K	250A[1]	200-240 V	type aR
380-480 V			
K37-1K5	10A[1]	380-500 V	type gG
2K2-3K0	16A[1]	380-500 V	type gG
4K0-5K5	25A[1]	380-500 V	type gG
7K5	35A[1]	380-500 V	type gG
11K-15K	63A[1]	380-500 V	type gG
18K	63A[1]	380-500 V	type gG
22K	63A[1]	380-500 V	type gG
30K	80A[1]	380-500 V	type gG
37K	100A[1]	380-500 V	type gG
45K	125A[1]	380-500 V	type gG
55K	160A[1]	380-500 V	type gG
75K	250A[1]	380-500 V	type aR
90K	250A[1]	380-500 V	type aR

5.2: **Non-UL fuses 200 V to 480 V**

1) Max. fuses - see national/international regulations to select an appropriate fuse size.

Danfoss PN	Bussmann	Ferraz	Siba
20220	170M4017	6.9URD31D08A0700	20 610 32.700
20221	170M6013	6.9URD33D08A0900	20 630 32.900

5.3: **Additional Fuses for Non-UL Applications, E enclosures, 380-480 V**

Size/Type	Bussmann PN*	Danfoss PN	Rating	Losses (W)
P355	170M4017 170M5013	20220	700 A, 700 V	85
P400	170M4017 170M5013	20220	700 A, 700 V	85
P500	170M6013	20221	900 A, 700 V	120
P560	170M6013	20221	900 A, 700 V	120

5.4: **E enclosures, 525-600 V**

*170M fuses from Bussmann shown use the -/80 visual indicator; -TN/80 Type T, -/110 or TN/110 Type T indicator fuses of the same size and amperage may be substituted for external use.

Danfoss PN	Bussmann	Ferraz	Siba
20220	170M4017	6.9URD31D08A0700	20 610 32.700
20221	170M6013	6.9URD33D08A0900	20 630 32.900

5.5: **Additional Fuses for Non-UL ApplicationsE enclosures, 525-600 V**

Suitable for use on a circuit capable of delivering not more than 100,000 rms symmetrical amperes, 500/600/690 Volts maximum when protected by the above fuses.

Circuit Breaker Tables

Circuit Breakers manufactured by General Electric, Cat. No. SKHA36AT0800, 600 V AC maximum, with the rating plugs listed below can be used to meet UL requirements.

Size/Type	Rating plug catalog #	Amps
P110	SRPK800A300	300
P132	SRPK800A350	350
P160	SRPK800A400	400
P200	SRPK800A500	500
P250	SRPK800A600	600

5.6: **D enclosures, 380-480 V**

Non-UL compliance

If UL/cUL is not to be complied with, we recommend using the following fuses, which will ensure compliance with EN50178:

In case of malfunction, not following the recommendation may result in unnecessary damage to the adjustable frequency drive.

P110 - P200	380-500 V	type gG
P250 - P450	380-500 V	type gR

Frequen-cy drive	Bussmann	Bussmann	Bussmann	SIBA	Littel fuse	Ferraz-Shawmut	Ferraz-Shawmut
UL Compliance - 200-240 V							
kW	Type RK1	Type J	Type T	Type RK1	Type RK1	Type CC	Type RK1
K25-K37	KTN-R05	JKS-05	JJN-05	5017906-005	KLN-R005	ATM-R05	A2K-05R
K55-1K1	KTN-R10	JKS-10	JJN-10	5017906-010	KLN-R10	ATM-R10	A2K-10R
1K5	KTN-R15	JKS-15	JJN-15	5017906-015	KLN-R15	ATM-R15	A2K-15R
2K2	KTN-R20	JKS-20	JJN-20	5012406-020	KLN-R20	ATM-R20	A2K-20R
3K0	KTN-R25	JKS-25	JJN-25	5012406-025	KLN-R25	ATM-R25	A2K-25R
3K7	KTN-R30	JKS-30	JJN-30	5012406-030	KLN-R30	ATM-R30	A2K-30R
5K5	KTN-R50	JKS-50	JJN-50	5012406-050	KLN-R50	-	A2K-50R
7K5	KTN-R50	JKS-60	JJN-60	5012406-050	KLN-R60	-	A2K-50R
11K	KTN-R60	JKS-60	JJN-60	5014006-063	KLN-R60	A2K-60R	A2K-60R
15K	KTN-R80	JKS-80	JJN-80	5014006-080	KLN-R80	A2K-80R	A2K-80R
18K5	KTN-R125	JKS-150	JJN-125	2028220-125	KLN-R125	A2K-125R	A2K-125R
22K	KTN-R125	JKS-150	JJN-125	2028220-125	KLN-R125	A2K-125R	A2K-125R
30K	FWX-150	-	-	2028220-150	L25S-150	A25X-150	A25X-150
37K	FWX-200	-	-	2028220-200	L25S-200	A25X-200	A25X-200
45K	FWX-250	-	-	2028220-250	L25S-250	A25X-250	A25X-250

5.7: **UL fuses 200-240 V**

Fre-quency drive	Bussmann	Bussmann	Bussmann	SIBA	Littel fuse	Ferraz-Shawmut	Ferraz-Shawmut
UL Compliance - 380-480 V, 525-600							
kW	Type RK1	Type J	Type T	Type RK1	Type RK1	Type CC	Type RK1
K37-1K1	KTS-R6	JKS-6	JJS-6	5017906-006	KLS-R6	ATM-R6	A6K-6R
1K5-2K2	KTS-R10	JKS-10	JJS-10	5017906-010	KLS-R10	ATM-R10	A6K-10R
3K0	KTS-R15	JKS-15	JJS-15	5017906-016	KLS-R16	ATM-R16	A6K-16R
4K0	KTS-R20	JKS-20	JJS-20	5017906-020	KLS-R20	ATM-R20	A6K-20R
5K5	KTS-R25	JKS-25	JJS-25	5017906-025	KLS-R25	ATM-R25	A6K-25R
7K5	KTS-R30	JKS-30	JJS-30	5012406-032	KLS-R30	ATM-R30	A6K-30R
11K	KTS-R40	JKS-40	JJS-40	5014006-040	KLS-R40	-	A6K-40R
15K	KTS-R40	JKS-40	JJS-40	5014006-040	KLS-R40	-	A6K-40R
18K	KTS-R50	JKS-50	JJS-50	5014006-050	KLS-R50	-	A6K-50R
22K	KTS-R60	JKS-60	JJS-60	5014006-063	KLS-R60	-	A6K-60R
30K	KTS-R80	JKS-80	JJS-80	2028220-100	KLS-R80	-	A6K-80R
37K	KTS-R100	JKS-100	JJS-100	2028220-125	KLS-R100		A6K-100R
45K	KTS-R125	JKS-150	JJS-150	2028220-125	KLS-R125		A6K-125R
55K	KTS-R150	JKS-150	JJS-150	2028220-160	KLS-R150		A6K-150R
75K	FWH-220	-	-	2028220-200	L50S-225		A50-P225
90K	FWH-250	-	-	2028220-250	L50S-250		A50-P250

5.8: **UL fuses 380-600 V**

KTS fuses from Bussmann may substitute for KTN for 240 V adjustable frequency drives.

FWH fuses from Bussmann may substitute for FWX for 240 V adjustable frequency drives.

KLSR fuses from LITTEL FUSE may substitute for KLNR fuses for 240 V adjustable frequency drives.

L50S fuses from LITTEL FUSE may substitute for L50S fuses for 240 V adjustable frequency drives.

A6KR fuses from FERRAZ SHAWMUT may substitute for A2KR for 240 V adjustable frequency drives.

A50X fuses from FERRAZ SHAWMUT may substitute for A25X for 240 V adjustable frequency drives.

High Power Fuse Tables

Size/ Type	Buss-mann E1958 JFHR2**	Buss-mann E4273 T/ JDDZ**	SIBA E180276 RKI/JDDZ	LittelFuse E71611 JFHR2**	Ferraz-Shawmut E60314 JFHR2**	Buss-mann E4274 H/ JDDZ**	Bussmann E125085 JFHR2*	Internal Option Bussmann
P110	FWH-300	JJS-300	2028220-315	L50S-300	A50-P300	NOS-300	170M3017	170M3018
P132	FWH-350	JJS-350	2028220-315	L50S-350	A50-P350	NOS-350	170M3018	170M4016
P160	FWH-400	JJS-400	206xx32-400	L50S-400	A50-P400	NOS-400	170M4012	170M4016
P200	FWH-500	JJS-500	206xx32-500	L50S-500	A50-P500	NOS-500	170M4014	170M4016
P250	FWH-600	JJS-600	206xx32-600	L50S-600	A50-P600	NOS-600	170M4016	170M4016

5.9: **D enclosures, 380-480 V**

*170M fuses from Bussmann shown use the -/80 visual indicator; -TN/80 Type T, -/110 or TN/110 Type T indicator fuses of the same size and amperage may be substituted for external use
**Any minimum 480 V UL-listed fuse with associated current rating may be used to meet UL requirements.

Size/Type	Bussmann E125085 JFHR2	Amps	SIBA E180276 JFHR2	Ferraz-Shawmut E76491 JFHR2
P110	170M3017	315	2061032.315	6.6URD30D08A0315
P132	170M3018	350	2061032.350	6.6URD30D08A0350
P160	170M4011	350	2061032.350	6.6URD30D08A0350
P200	170M4012	400	2061032.400	6.6URD30D08A0400
P250	170M4014	500	2061032.500	6.6URD30D08A0500
P315	170M5011	550	2062032.550	6.6URD32D08A0550

5.10: **D enclosures, 525-600 V**

Size/Type	Bussmann PN*	Danfoss PN	Rating	Losses (W)
P315	170M5013	20221	900 A, 700 V	120
P355	170M6013	20221	900 A, 700 V	120
P400	170M6013	20221	900 A, 700 V	120
P450	170M6013	20221	900A, 700 V	120

5.11: **E enclosures, 380-480 V**

*170M fuses from Bussmann shown use the -/80 visual indicator; -TN/80 Type T, -/110 or TN/110 Type T indicator fuses of the same size and amperage may be substituted for external use.

5.2.8. Access to Control Terminals

All terminals to the control cables are located underneath the terminal cover on the front of the adjustable frequency drive. Remove the terminal cover using a screwdriver (see illustration).

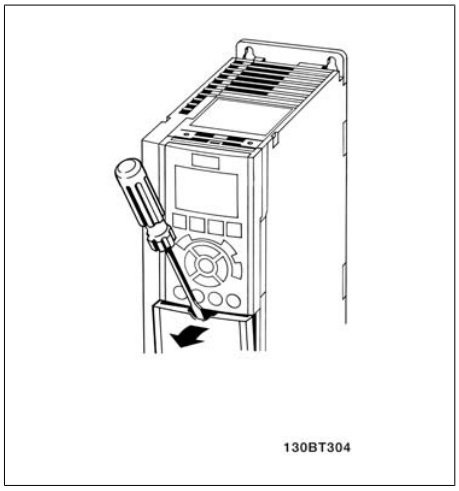

5.12: A1, A2 and A3 enclosures

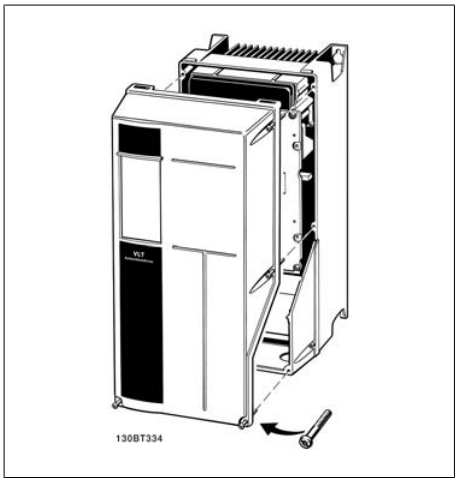

5.13: A5, B1, B2, C1 and C2 enclosures

5.2.9. Control Terminals

Drawing reference numbers:

1. 10-pole plug, digital I/O.
2. 3-pole plug, RS-485 bus.
3. 6-pole, analog I/O.
4. USB Connection.

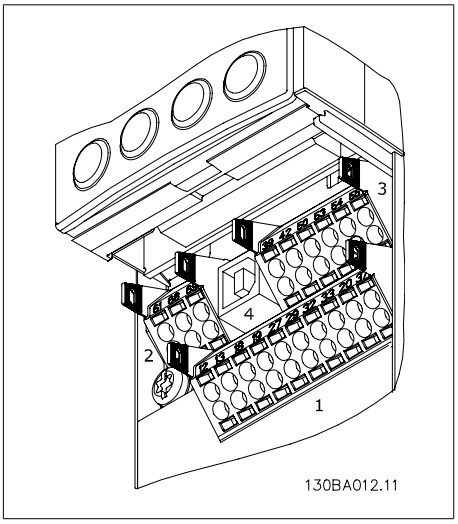

5.14: Control terminals (all enclosures)

5.2.10. Electrical Installation, Control Cable Terminals

To mount the cable to the terminal:

1. Strip isolation of 0.34-0.39 in [9-10 mm]
2. Insert a screw driver[1)] in the square hole.
3. Insert the cable in the adjacent circular hole.
4. Remove the screwdriver. The cable is now mounted to the terminal.

To remove the cable from the terminal:

1. Insert a screw driver[1)] in the square hole.
2. Pull out the cable.

[1)] Max. 0.015 x 0.1 in. [0.4 x 2.5 mm]

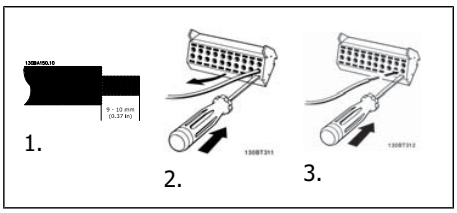

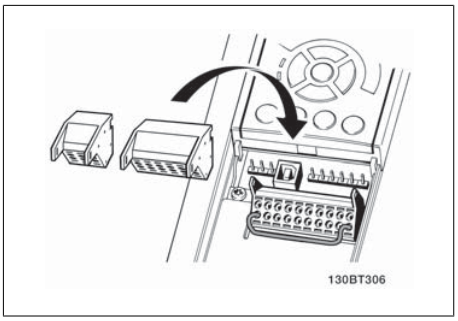

Assembling of IP55 / NEMA TYPE 12 housing with line power disconnector

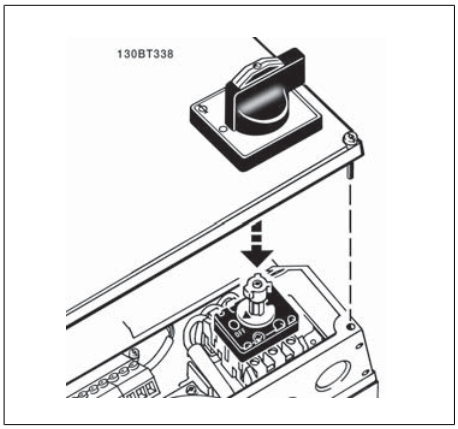

5

5.2.11. Basic Wiring Example

1. Mount terminals from the accessory bag to the front of the adjustable frequency drive.
2. Connect terminals 18 and 27 to +24 V (terminal 12/13)

Default settings:
18 = latched start
27 = stop inverse

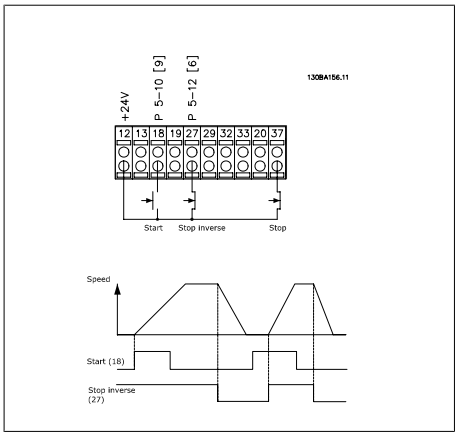

5.15: Terminal 37 available with Safe Stop Function only!

5.2.12. Electrical Installation, Control Cables

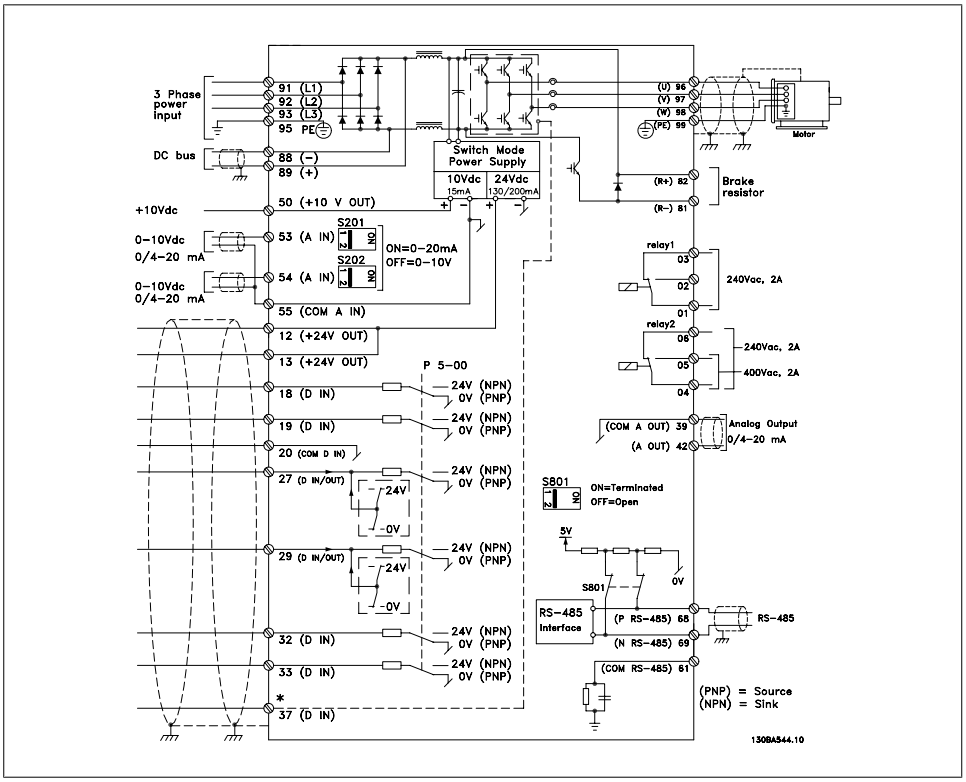

5.16: Diagram showing all electrical terminals. (Terminal 37 present for units with safe stop function only.)

In rare cases, and depending on the installation, very long control cables and analog signals may result in 50/60 Hz ground loops due to noise from line supply cables.

If this occurs, you may have to break the shield or insert a 100 nF capacitor between shield and chassis.

The digital and analog inputs and outputs must be connected separately to the VLT HVAC Drive common inputs (terminal 20, 55, 39) to avoid ground currents from both groups to affect other groups. For example, switching on the digital input may disturb the analog input signal.

NOTE
Control cables must be shielded/armored.

1. Use a clamp from the accessory bag to connect the shield to the adjustable frequency drive decoupling plate for control cables.

See the section entitled *Grounding of Shielded/Armored Control Cables* for the correct termination of control cables.

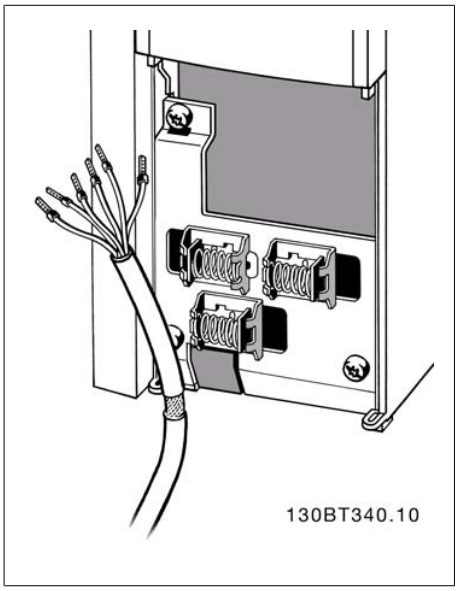

5.2.13. Switches S201, S202, and S801

Switches S201 (A53) and S202 (A54) are used to select a current (0-20 mA) or a voltage (0 to 10 V) configuration for the analog input terminals 53 and 54, respectively.

Switch S801 (BUS TER.) can be used to enable termination on the RS-485 port (terminals 68 and 69).

See drawing *Diagram showing all electrical terminals* in section *Electrical Installation.*

Default setting:

S201 (A53) = OFF (voltage input)

S202 (A54) = OFF (voltage input)

S801 (Bus termination) = OFF

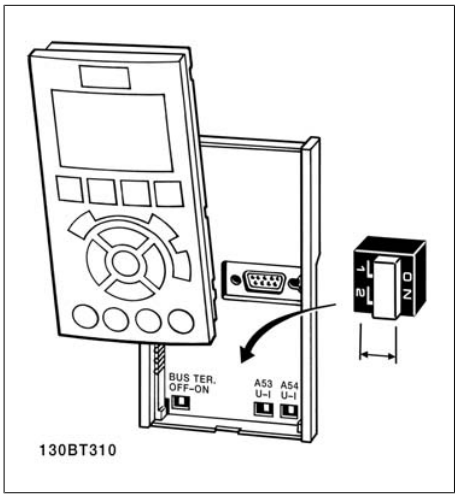

5.3. Final Set-Up and Test

5.3.1. Final Set-Up and Test

To test the set-up and ensure that the adjustable frequency drive is running, follow these steps.

Step 1. Locate the motor nameplate

> **NOTE**
> The motor is either star- (Y) or delta-connected (Δ). This information is located on the motor nameplate data.

Step 2. Enter the motor nameplate data in this parameter list.
To access this list, first press the [QUICK MENU] key, then select "Q2 Quick Setup".

1.	Motor Power [kW] or Motor Power [HP]	par. 1-20 par. 1-21
2.	Motor Voltage	par. 1-22
3.	Motor Frequency	par. 1-23
4.	Motor Current	par. 1-24
5.	Motor Nominal Speed	par. 1-25

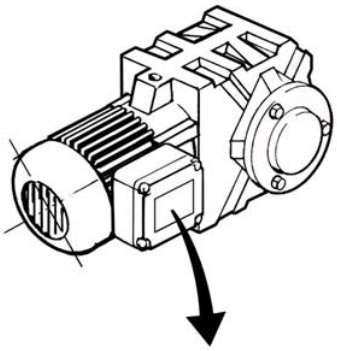

Step 3. Activate the Automatic Motor Adaptation (AMA)
Performing an AMA will ensure optimum performance. The AMA measures the values from the motor model equivalent diagram.

1. Connect terminal 27 to terminal 12, or set par. 5-12 to 'No function' (par. 5-12 [0])
2. Activate the AMA par. 1-29.
3. Choose between complete or reduced AMA. If an LC filter is mounted, run only the reduced AMA, or remove the LC filter during the AMA procedure.
4. Press the [OK] key. The display shows "Press [Hand on] to start."
5. Press the [Hand on] key. A progress bar indicates if the AMA is in progress.

Stop the AMA during operation.

1. Press the [OFF] key. The adjustable frequency drive enters into alarm mode and the display shows that the AMA was terminated by the user.

Successful AMA

1. The display shows "Press [OK] to finish AMA."
2. Press the [OK] key to exit the AMA state.

Unsuccessful AMA

1. The adjustable frequency drive enters into alarm mode. A description of the alarm can be found in the *Troubleshooting* section.
2. "Report Value" in the [Alarm Log] shows the last measuring sequence carried out by the AMA before the adjustable frequency drive entered alarm mode. This number, along with the description of the alarm, will assist you in troubleshooting. If you contact Danfoss Service, make sure to mention both the number and the alarm description.

NOTE
Unsuccessful AMA is often caused by incorrectly registered motor nameplate data or a difference between the motor power size and the VLT HVAC Drive power size that is too great.

Step 4. Set speed limit and ramp time

Set up the desired limits for speed and ramp time.

Minimum Reference	par. 3-02
Maximum Reference	par. 3-03

Motor Speed Low Limit	par. 4-11 or 4-12
Motor Speed High Limit	par. 4-13 or 4-14

Ramp-up Time 1 [s]	par. 3-41
Ramp-down Time 1 [s]	par. 3-42

5.4. Additional Connections

5.4.1. DC bus connection

The DC bus terminal is used for DC back-up, with the intermediate circuit being supplied from an external source.

Terminal numbers: 88, 89

Please contact Danfoss if you require further information.

5.4.2. Brake Connection Option

The connection cable to the brake resistor must be shielded/armored.

Enclosure	**A+B+C+D+F**	**A+B+C+D+F**
Brake resistor	81	82
Terminals	R-	R+

NOTE
Dynamic brake calls for extra equipment and safety considerations. For further information, please contact Danfoss.

1. Use cable clamps to connect the shield to the metal cabinet of the adjustable frequency drive and to the decoupling plate of the brake resistor.
2. Dimension the cross-section of the brake cable to match the brake current.

NOTE
Voltages of up to 975 V DC (@ 600 V AC) may occur between the terminals.

NOTE
If a short circuit in the brake IGBT occurs, prevent power dissipation in the brake resistor by using a line switch or contactor to disconnect the line power from the adjustable frequency drive. Only the adjustable frequency drive should control the contactor.

5.4.3. Relay Connection

To set relay output, see par. group 5-4* Relays.

No.	01 - 02	make (normally open)
	01 - 03	break (normally closed)
	04 - 05	make (normally open)
	04 - 06	break (normally closed)

5

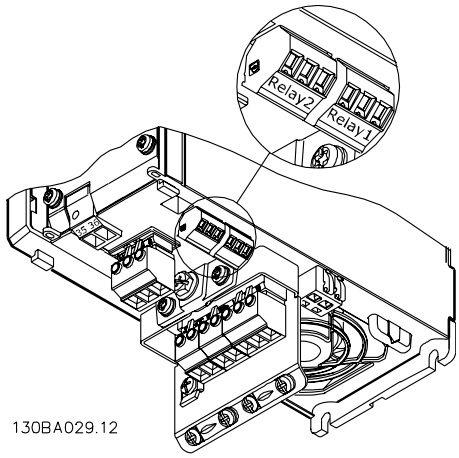

Terminals for relay connection
(A2 and A3 enclosures).

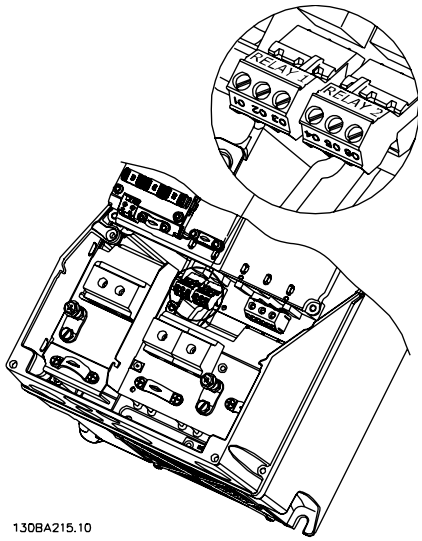

Terminals for relay connection
(A5, B1 and B2 enclosures).

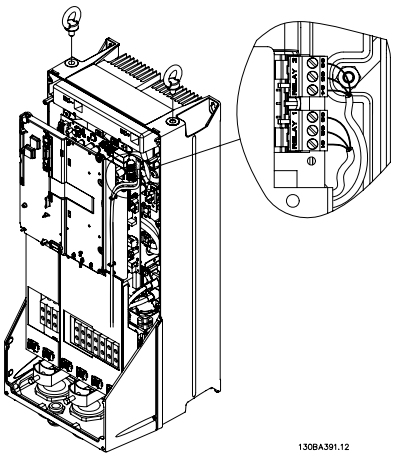

5.17: Terminals for relay connection
(C1 and C2 enclosures).

5.4.4. Relay Output

Relay 1

- Terminal 01: common
- Terminal 02: normal open 240 V AC
- Terminal 03: normal closed 240 V AC

Relay 2

- Terminal 04: common
- Terminal 05: normal open 400 V AC
- Terminal 06: normal closed 240 V AC

Relay 1 and relay 2 are programmed in par. 5-40, 5-41, and 5-42.

Additional relay outputs by using option module MCB 105.

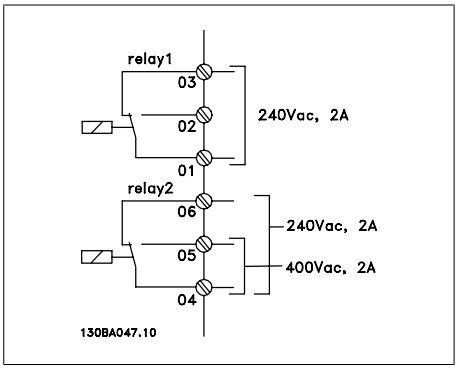

5.4.5. Parallel Connection of Motors

The adjustable frequency drive can control several parallel-connected motors. The total current consumption of the motors must not exceed the rated output current I_{INV} for the adjustable frequency drive.

NOTE
When motors are connected in parallel, par. 1-02 *Automatic Motor Adaptation (AMA)* cannot be used.

Problems may arise at start and at low RPM values if motor sizes are widely different, because small motors' relatively high ohmic resistance in the stator calls for a higher voltage at start and at low RPM values.

The electronic thermal relay (ETR) of the adjustable frequency drive cannot be used as motor protection for the individual motor of systems with parallel-connected motors. Provide further motor protection with, for example, thermistors in each motor or individual thermal relays (circuit breakers are not a suitable means of protection).

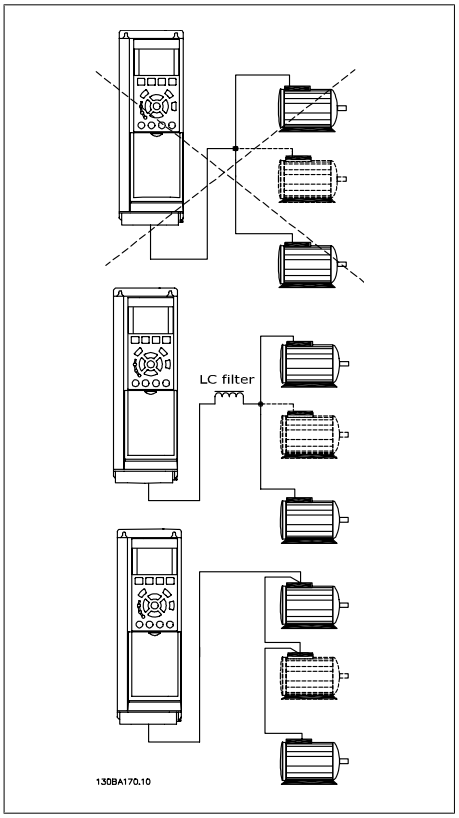

5.4.6. Direction of Motor Rotation

The default setting is clockwise rotation with the adjustable frequency drive output connected as follows.

Terminal 96 connected to U-phase
Terminal 97 connected to V-phase
Terminal 98 connected to W-phase

Thedirection of motor rotation is changed by switching two motor phases.

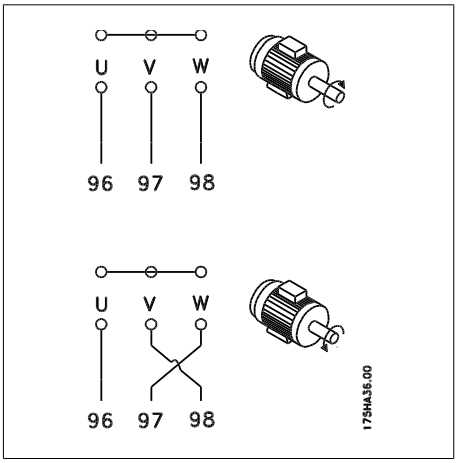

5.4.7. Motor Thermal Protection

The electronic thermal relay in the adjustable frequency drive has received UL approval for single motor protection, when par. 1-90 *Motor Thermal Protection* is set for *ETR Trip* and par. 1-24 *Motor current,* $I_{M,N}$ is set to the rated motor current (see motor nameplate).

5.5. Installation of misc. connections

5.5.1. RS-485 Bus Connection

One or more adjustable frequency drives can be connected to a control (or master) using the RS-485 standardized interface. Terminal 68 is connected to the P signal (TX+, RX+), while terminal 69 is connected to the N signal (TX-, RX-).

If more than one adjustable frequency drive is connected to a master, use parallel connections.

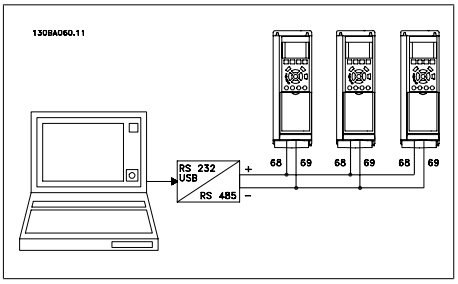

In order to avoid potential equalizing currents in the shield, ground the cable shield via terminal 61, which is connected to the frame via an RC link.

Bus termination
The RS-485 bus must be terminated by a resistor network at both ends. For this purpose, set switch S801 on the control card to "ON".
For more information, see the paragraph *Switches S201, S202, and S801*.

NOTE
Communication protocol must be set to FC MC par. 8-30.

5.5.2. How to Connect a PC to the FC 100

To control or program the adjustable frequency drive from a PC, install the MCT 10 Set-up software.
The PC is connected via a standard (host/device) USB cable, or via the RS-485 interface as shown in the *VLT® HVAC Drive Design Guide, chapter How to Install > Installation of misc. connections*.

5

NOTE
The USB connection is galvanically isolated from the supply voltage (PELV) and other high-voltage terminals. The USB connection is connected to protection ground on the adjustable frequency drive. Only use an isolated laptop as the PC connection to the USB connector on the VLT HVAC Drive.

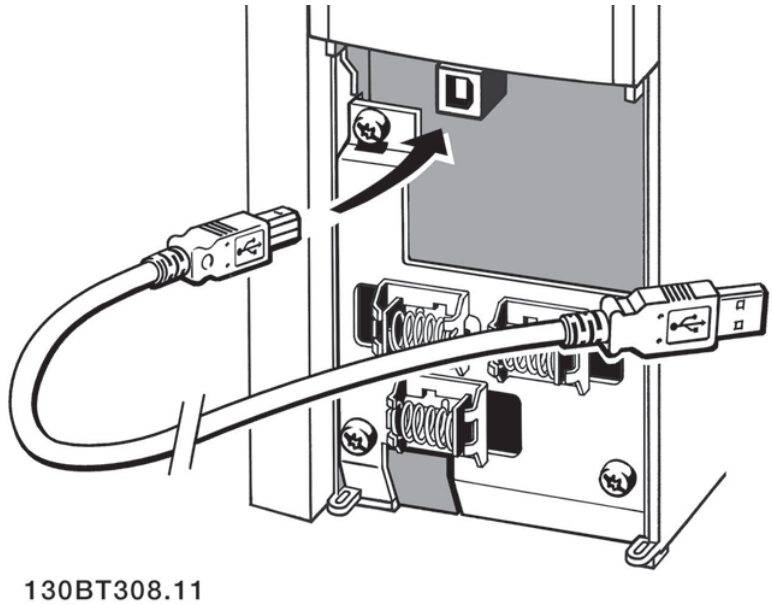

PC Software - MCT 10
All drives are equipped with a serial communication port. We provide a PC tool for communication between PC and adjustable frequency drive, called the VLT Motion Control Tool MCT 10 Set-up software.

MCT 10 Set-up Software
MCT 10 has been designed as an easy-to-use interactive tool for setting parameters in our adjustable frequency drives.
The MCT 10 Set-up software will be useful for:

- Planning a communication network off-line. The MCT 10 contains a complete adjustable frequency drive database.
- Commissioning adjustable frequency drives on-line.
- Saving settings for all adjustable frequency drives.
- Replacing a drive in a network
- Expanding an existing network.
- Drives developed in the future will be fully supported.

MCT 10 Set-up Software support Profibus DP-V1 via a Master class 2 connection. This makes it possible to access on-line read/write parameters in an adjustable frequency drive via the Profibus network. This will eliminate the need for an extra communication network.

Save Drive Settings: All parameters are now stored on the PC.

1. Connect a PC to the unit via the USB com port.
2. Open MCT 10 Set-up software
3. Choose "Read from drive".
4. Choose "Save as".

Load Drive Settings: All parameter settings are now transferred to the drive.

1. Connect a PC to the unit via the USB com port.
2. Open MCT 10 Set-up software
3. Choose "Open"– stored files will be shown.
4. Open the appropriate file.
5. Choose "Write to drive."

A separate manual for MCT 10 Set-up software is available.

The MCT 10 Set-up Software Modules
The following modules are included in the software package:

	MCT 10 Set-up Software Setting parameters Copy to and from adjustable frequency drives Documentation and print-out of parameter settings incl. diagrams
	Ext. User Interface Preventive Maintenance Schedule Clock settings Timed Action Programming Smart Logic Controller Set-up

Ordering number:
Please order your CD containing MCT 10 Set-up software using code number 130B1000.

MCT 31 can also be downloaded from the Danfoss homepage at: WWW.DANFOSS.COM, Business Area: Motion Controls.

MCT 31
The MCT 31 harmonic calculation PC tool enables easy estimation of the harmonic distortion in a given application. Both the harmonic distortion of Danfoss adjustable frequency drives as well as non-Danfoss adjustable frequency drives with different additional harmonic reduction devices, such as Danfoss AHF filters and 12-18-pulse rectifiers, can be calculated.

Ordering number:
Please order your CD containing the MCT 31 PC tool using code number 130B1031.

MCT 31 can also be downloaded from Danfoss on the internet at: WWW.DANFOSS.COM, Business Area: Motion Controls.

5.6. Safety

5.6.1. High Voltage Test

Carry out a high voltage test by short circuiting terminals U, V, W, L_1, L_2 and L_3. Energize by max. 2.15 kV DC for one second between this short circuit and the chassis.

NOTE
When running high voltage tests of the entire installation, interrupt the mains and motor connection if the leakage currents are too high.

5.6.2. Safety Ground Connection

The adjustable frequency drive has a high leakage current and must be grounded appropriately for safety reasons according to EN 50178.

The ground leakage current from the adjustable frequency drive exceeds 3.5 mA. To ensure a good mechanical connection from the ground cable to the ground connection (terminal 95), the cable cross-section must be at least 0.39 in2 [10 mm2] or 2 rated ground wires terminated separately.

5.7. EMC-correct Installation

5.7.1. Electrical Installation -

The following is a guideline for good engineering practice when installing adjustable frequency drives. Follow these guidelines to comply with EN 61800-3 *First environment*. If the installation is in EN 61800-3 *Second environment,* i.e., industrial networks, or in an installation with its own transformer, deviation from these guidelines is allowed but not recommended. See also paragraphs *CE Labeling, General Aspects of EMC Emission* and *EMC Test Results*.

Good engineering practice to ensure EMC-correct electrical installation:

- Use only braided shielded/armored motor cables and braided shielded/armored control cables. The shield should provide a minimum coverage of 80%. The shield material must be metal, not limited to, but typically, copper, aluminum, steel or lead. There are no special requirements for the line cable.
- Installations using rigid metal conduits are not required to contain shielded cable, but the motor cable must be installed in conduit separate from the control and line cables. Full connection of the conduit from the drive to the motor is required. The EMC performance of flexible conduits varies greatly, and information from the manufacturer must therefore be obtained.
- Connect the shield/armor/conduit to ground at both ends for motor cables as well as for control cables. In some cases, it is not possible to connect the shield at both ends. If so, connect the shield at the adjustable frequency drive. See also *Grounding of Braided Shielded/Armored Control Cables*.
- Avoid terminating the shield/armor with twisted ends (pigtails). It increases the high frequency impedance of the shield, which reduces its effectiveness at high frequencies. Use low-impedance cable clamps or EMC cable glands instead.
- Avoid using unshielded/unarmored motor or control cables inside cabinets housing the drive(s), whenever this can be avoided.

Leave the shield as close to the connectors as possible.

The illustration shows an example of an EMC-correct electrical installation of an IP 20 adjustable frequency drive. The adjustable frequency drive is fitted in an installation cabinet with an output contactor and connected to a PLC, which is installed in a separate cabinet. Other ways of performing the installation may result in an equally effective EMC performance, provided the above guidelines for engineering practice are followed.

If the installation is not carried out according to the guidelines, and if non-shielded cables and control wires are used, some emission requirements will not be fulfilled, although the immunity requirements will be. See the paragraph *EMC test results*.

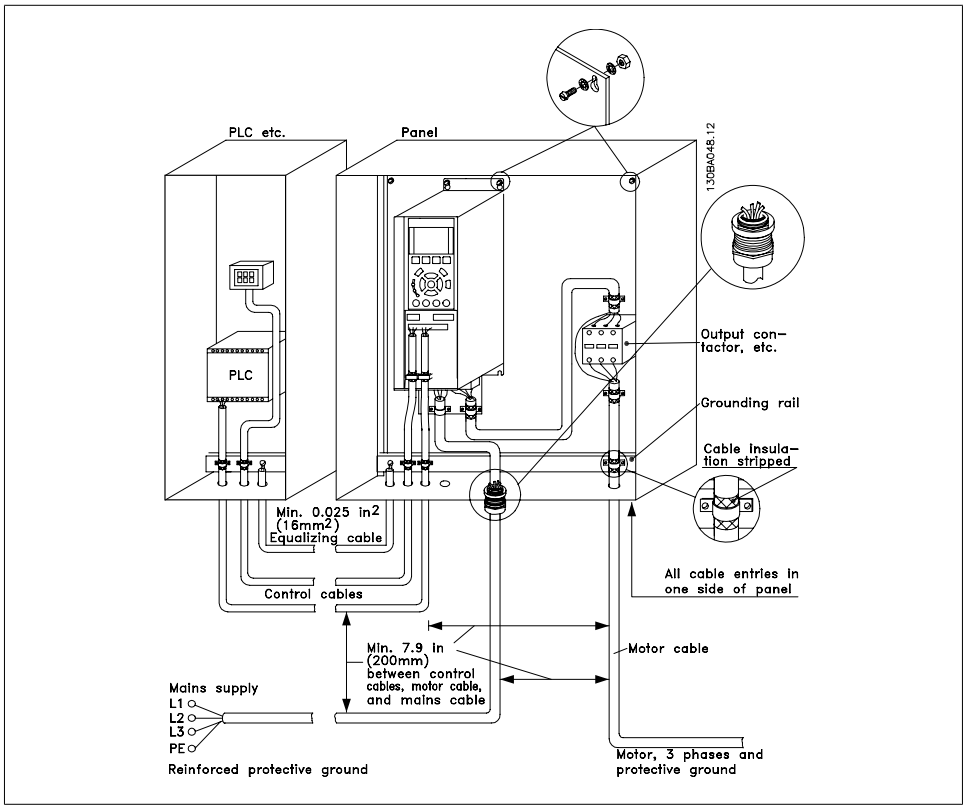

5.18: EMC-compliant electrical installation of an adjustable frequency drive in a cabinet.

5.7.2. Use of EMC-Compliant Cables

Danfoss recommends braided shielded/armored cables to optimize EMC immunity of the control cables and the EMC emission from the motor cables.

The ability of a cable to reduce the in and outgoing radiation of electric noise depends on the transfer impedance (Z_T). The shield of a cable is normally designed to reduce the transfer of electric noise; however, a shield with a lower transfer impedance (Z_T) value is more effective than a shield with a higher transfer impedance (Z_T).

Transfer impedance (Z_T) is rarely stated by cable manufacturers, but it is often possible to estimate transfer impedance (Z_T) by assessing the physical design of the cable.

Transfer impedance (Z_T) can be assessed on the basis of the following factors:

- The conductibility of the shield material.
- The contact resistance between the individual shield conductors.
- The shield coverage, i.e., the physical area of the cable covered by the shield - often stated as a percentage value.
- Shield type, i.e., braided or twisted pattern.

a. Aluminum-clad with copper wire.1

b. Twisted copper wire or armored steel wire cable. 1

c. Single-layer braided copper wire with varying percentage shield coverage.
This is the typical Danfoss reference cable.1

d. Double-layer braided copper wire.1

e. Twin layer of braided copper wire with a magnetic, shielded/armored intermediate layer.1

f. Cable that runs in copper tube or steel tube.1

g. Lead cable with 0.43 in [1.1 mm] wall thickness.1

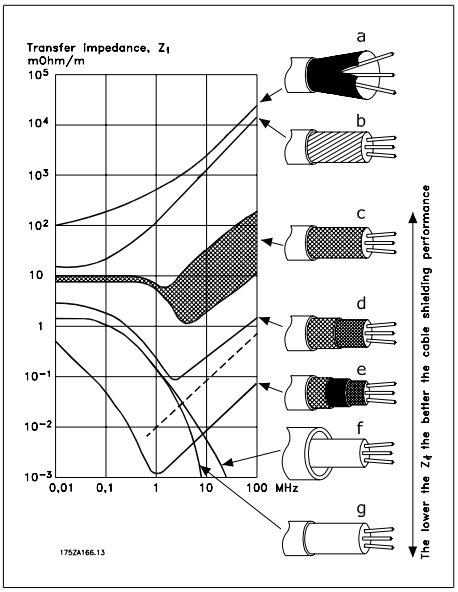

5

5.7.3. Grounding of Shielded/Armored Control Cables

Generally speaking, control cables must be braided and shielded/armored, and the shield must be connected by means of a cable clampat both ends to the metal cabinet of the unit.

The drawing below indicates how correct grounding is carried out and what to do if in doubt.

a. **Correct grounding**
Control cables and cables for serial communication must be fitted with cable clamps at both ends to ensure the best possible electrical contact.1

b. **Wrong grounding**
Do not use twisted cable ends (pigtails). They increase the shield impedance at high frequencies.1

c. **Protection with respect to ground potential between the PLC and VLT**
If the ground potential between the adjustable frequency drive and the PLC (etc.) is different, electric noise may occur that will disturb the entire system. Solve this problem by fitting an equalizing cable next to the control cable. Minimum cable cross-section: 0.025 in ^{2} [16 mm ^{2}].1

d. **For 50/60 Hz ground loops**
If very long control cables are used, 50/60 Hz ground loops may occur. Solve this problem by connecting one end of the shield to ground via a 100nF capacitor (keeping leads short).1

e. **Cables for serial communication**
Eliminate low-frequency noise currents between two adjustable frequency drives by connecting one end of the shield to terminal 61. This terminal is grounded via an internal RC link. Use twisted-pair cables to reduce the differential mode interference between the conductors.1

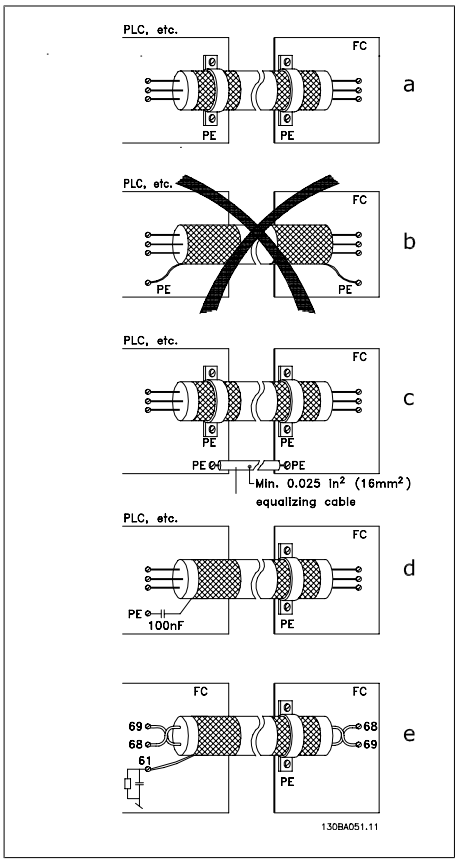

5.8. AC Line Supply Interference/Harmonics

5.8.1. AC Line Supply Interference/Harmonics

An adjustable frequency drive takes up a non-sinusoidal current from the line power, which increases the input current I_{RMS}. A non-sinusoidal current is transformed by means of a Fourier analysis and split up into sine-wave currents with different frequencies, i.e., different harmonic currents I_N with 50 Hz as their basic frequency:

Harmonic currents	I_1	I_5	I_7
Hz	50 Hz	250 Hz	350 Hz

The harmonics do not affect the power consumption directly, but they do increase the heat losses in the installation (transformer, cables). Consequently, in plants with a high percentage of rectifier load, maintain harmonic currents at a low level to prevent an overload of the transformer and high temperature in the cables.

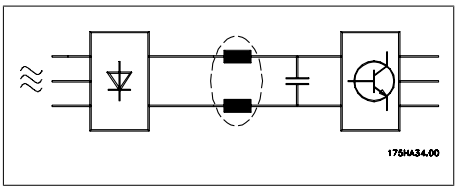

NOTE
Some of the harmonic currents might disturb communication equipment connected to the same transformer or cause resonance in connection with power-factor correction batteries.

Harmonic currents compared to the RMS input current:

	Input current
I_{RMS}	1.0
I_1	0.9
I_5	0.4
I_7	0.2
I_{11-49}	< 0.1

To ensure low harmonic currents, the adjustable frequency drive is standard-equipped with intermediate circuit coils. This normally reduces the input current I_{RMS} by 40%.

The voltage distortion in the line supply depends on the size of the harmonic currents multiplied by the line power impedance for the frequency in question. The total voltage distortion THD is calculated on the basis of the individual voltage harmonics using this formula:

$$THD\% = \sqrt{U_5^2 + U_7^2 + \ldots + U_N^2}$$

(U_N% of U)

5.9.1. Residual Current Device

You can use RCD relays, multiple protective grounding or grounding as extra protection, provided that local safety regulations are complied with.

If a ground fault appears, a DC content may develop in the faulty current.

If RCD relays are used, you must observe local regulations. Relays must be suitable for protection of 3-phase equipment with a bridge rectifier and for a brief discharge on power-up see section *Ground Leakage Current* for further information.

6. Application Examples

6.1.1. Start/Stop

Terminal 18 = start/stop par. 5-10 [8] *Start*
Terminal 27 = No operation par. 5-12 [0] *No operation* (Default *coast inverse*

Par. 5-10 *Digital Input* = *Start* (default)

Par. 5-12 *Digital Input* = *coast inverse* (default)

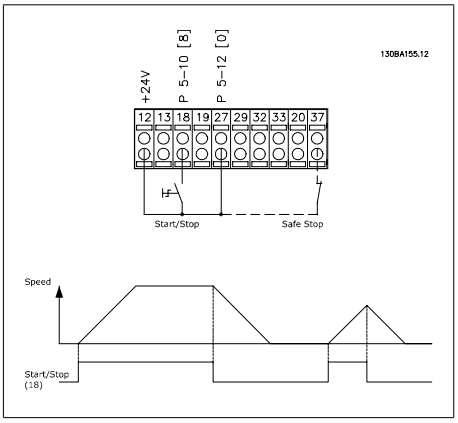

6.1: Terminal 37: Available only with Safe Stop Function!

6.1.2. Pulse Start/Stop

Terminal 18 = start/stop par. 5-10 [9] *Latched start*
Terminal 27= Stop par. 5-12 [6] *Stop inverse*

Par. 5-10 *Digital Input* = *Latched start*

Par. 5-12 *Digital Input* = *Stop inverse*

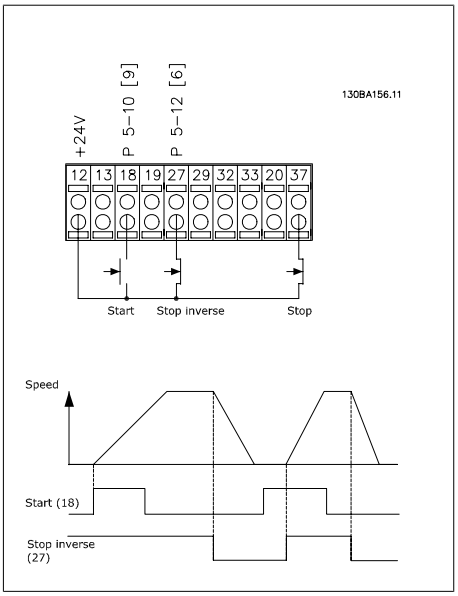

6.2: Terminal 37: Available only with Safe Stop Function!

6.1.3. Potentiometer Reference

Voltage reference via a potentiometer.

Par. 3-15 *Reference 1 Source* [1] = *Analog Input 53*

Par. 6-10 *Terminal 53, Low Voltage* = 0 Volt

Par. 6-11 *Terminal 53, High Voltage* = 10 Volt

Par. 6-14 *Terminal 53, Low Ref./ Feedb. Value* = 0 RPM

Par. 6-15 *Terminal 53, High Ref./ Feedb. Value* = 1.500 RPM

Switch S201 = OFF (U)

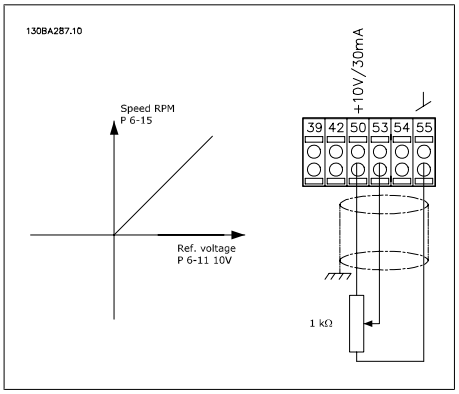

6

6.1.4. Automatic Motor Adaptation (AMA)

AMA is an algorithm used to measure the electrical motor parameters of a motor at standstill. This means that AMA itself does not supply any torque.
AMA is useful when commissioning systems and optimizing the adjustment of the adjustable frequency drive to the applied motor. In particular, this feature is used where the default setting does not apply to the connected motor.
Par. 1-29 allows a choice of complete AMA with determination of all electrical motor parameters, or reduced AMA with determination of only the stator resistance, Rs.
The duration of a total AMA varies from a few minutes on small motors, to more than 15 minutes on large motors.

Limitations and preconditions:

- For the AMA to optimally determine the motor parameters, enter the correct motor nameplate data in par. 1-20 to 1-26.
- For the best adjustment of the adjustable frequency drive, carry out an AMA on a cold motor. Repeated AMA runs may lead to a heating of the motor, which results in an increase of the stator resistance, Rs. Normally, this is not critical.
- An AMA can only be carried out if the rated motor current is a minimum of 35% of the rated output current of the adjustable frequency drive. An AMA can be carried out on up to one oversized motor.
- It is possible to carry out a reduced AMA test with a sine-wave filter installed. Avoid carrying out a complete AMA with a sine-wave filter. If an overall setting is required, remove the sine-wave filter while running a total AMA. After completion of the AMA, reinsert the sine-wave filter.
- If motors are coupled in parallel, use only a reduced AMA, if any.
- Avoid running a complete AMA when using synchronous motors. If synchronous motors are applied, run a reduced AMA and manually set the extended motor data. The AMA function does not apply to permanent magnet motors.
- The adjustable frequency drive does not produce motor torque during an AMA. During an AMA, it is imperative that the application does not force the motor shaft to run, which

is known to happen with windmilling in ventilation systems, for example. This disturbs the AMA function.

6.1.5. Smart Logic Control

The smart logic control (SLC) is essentially a sequence of user-defined actions (see par. 13-52) executed by the SLC when the associated user-defined *event* (see par. 13-51) is evaluated as TRUE by the SLC.
Events and *actions* are each numbered and are linked in pairs called states. This means that when *event [1]* is fulfilled (attains the value TRUE), *action [1]* is executed. After this, the conditions of *event [2]* will be evaluated and, if evaluated TRUE, *action [2]* will be executed and so on. Events and actions are placed in array parameters.

Only one *event* will be evaluated at any time. If an *event* is evaluated as FALSE, nothing happens (in the SLC) during the present scan interval and no other *events* will be evaluated. This means that when the SLC starts, it evaluates *event [1]* (and only *event [1]*) each scan interval. Only when *event [1]* is evaluated TRUE does the SLC execute *action [1]* and start evaluating *event [2]*.

It is possible to program from 0 to 20 *events* and *actions*. When the last *event / action* has been executed, the sequence starts over again from *event [1] / action [1]*. The illustration shows an example with three *events / actions*:

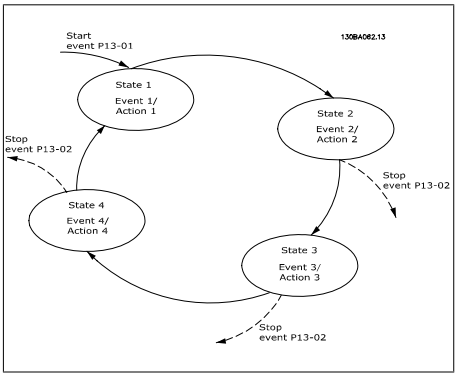

6.1.6. Smart Logic Control Programming

A new useful function in the VLT HVAC Drive is the Smart Logic Control (SLC).
In applications where a PLC generates a simple sequence, the SLC may take over elementary tasks from the main control.
The SLC is designed to act according to an event sent to or generated by the VLT HVAC Drive. The adjustable frequency drive will then perform the pre-programmed action.

6.1.7. SLC Application Example

One sequence 1:
Start – ramp-up – run at reference speed 2 sec – ramp-down and hold shaft until stop.

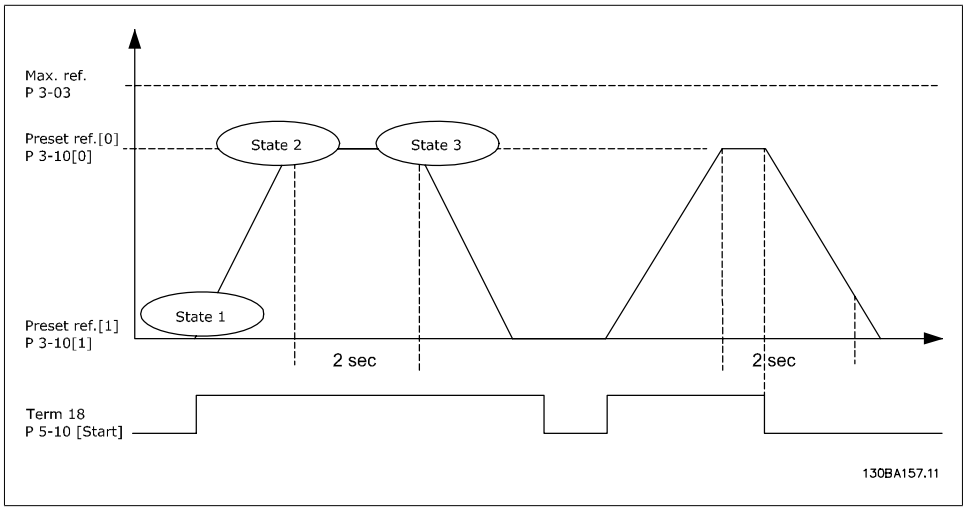

6

Set the ramping times in par. 3-41 and 3-42 to the desired times.

$$t_{ramp} = \frac{t_{acc} \times n_{norm}\ (par.\ 1-25)}{\Delta\ ref\ [RPM]}$$

Set term 27 to *No Operation* (par. 5-12)
Set Preset reference 0 to first preset speed (par. 3-10 [0]) in percentage of Max Reference speed (par. 3-03). Ex.: 60%
Set preset reference 1 to second preset speed (par. 3-10 [1]) Ex.: 0% (zero).
Set the timer 0 for constant running speed in par. 13-20 [0]. Ex.: 2 sec.

Set Event 1 in par. 13-51 [1] to *True* [1]
Set Event 2 in par. 13-51 [2] to *On Reference* [4]
Set Event 3 in par. 13-51 [3] to *Time Out 0* [30]
Set Event 4 in par. 13-51 [1] to *False* [0]

Set Action 1 in par. 13-52 [1] to *Select preset 0* [10]
Set Action 2 in par. 13-52 [2] to *Start Timer 0* [29]
Set Action 3 in par. 13-52 [3] to *Select preset 1* [11]
Set Action 4 in par. 13-52 [4] to *No Action* [1]

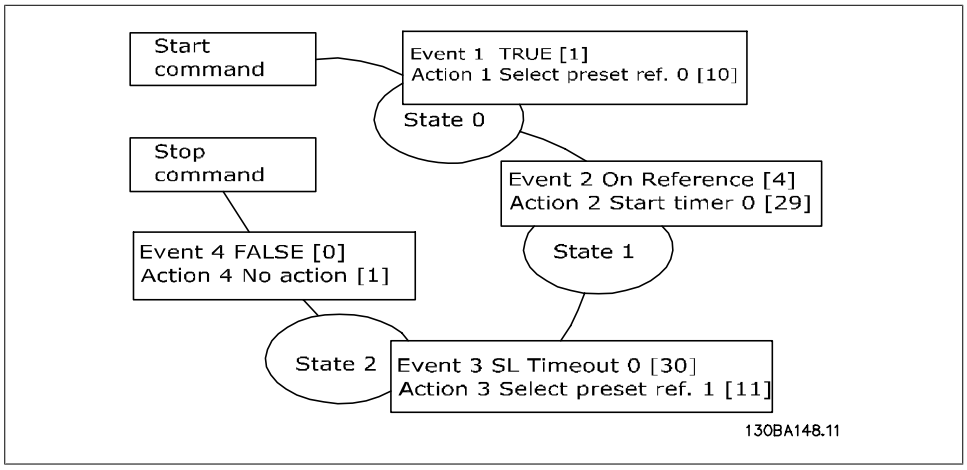

Set the smart logic control in par. 13-00 to ON.

Start/stop command is applied on terminal 18. If stop signal is applied, the adjustable frequency drive will ramp down and go into free mode.

6.1.8. BASIC Cascade Controller

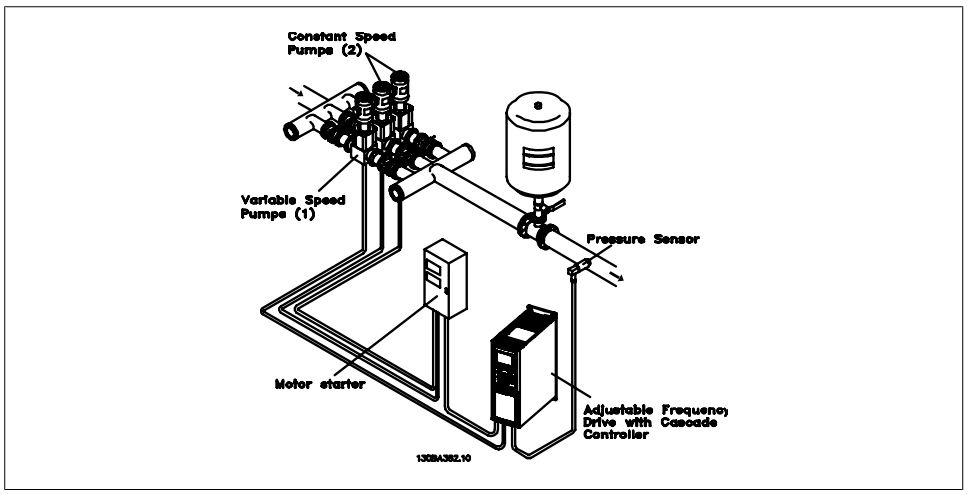

The BASIC Cascade Controller is used for pump applications where a certain pressure ("head") or level needs to be maintained over a wide dynamic range. Running a large pump at variable speed over a wide range is not an ideal solution because of low pump efficiency, and because there is a practical limit of about 25% rated full load speed for running a pump.

With the BASIC Cascade Controller, the adjustable frequency drive controls a variable speed motor as the variable speed pump (lead), and can stage up to two additional constant speed pumps to on and off. By varying the speed of the initial pump, variable speed control of the entire system is provided. This maintains constant pressure while eliminating pressure surges, resulting in reduced system stress and quieter operation in pumping systems.

Fixed Lead Pump
The motors must be of equal size. The BASIC Cascade Controller allows the adjustable frequency drive to control up to 3 equal size pumps using the drive's two built-in relays. When the variable pump (lead) is connected directly to the drive, the other 2 pumps are controlled by the two built-in relays. When lead pump alternations are enabled, pumps are connected to the built-in relays and the drive is capable of operating 2 pumps.

Lead Pump Alternation
The motors must be of equal size. This function makes it possible to cycle the drive between the pumps in the system (maximum of 2 pumps). In this operation, the run time between pumps is equalized, thus reducing the required pump maintenance and increasing reliability and system lifetime. The alternation of the lead pump can take place at a command signal or at staging (adding another pump).

The command can be a manual alternation or an alternation event signal. If the alternation event is selected, the lead pump alternation takes place every time the event occurs. Selections include: whenever an alternation timer expires, at a predefined time of day, or when the lead pump enters sleep mode. Staging is determined by the actual system load.

A separate parameter limit's alternation is only to take place if the total capacity required is > 50%. Total pump capacity is determined as the sum of the capacities of the lead pump and the fixed speed pumps.

Bandwidth Management
To avoid frequent switching of fixed speed pumps in cascade control systems, the desired system pressure is kept within a bandwidth rather than at a constant level. Staging bandwidth provides the required bandwidth for operation. When a large and quick change in system pressure occurs, the override bandwidth overrides the staging bandwidth to prevent immediate response to a short duration pressure change. An override bandwidth timer can be programmed to prevent staging until the system pressure has stabilized and normal control has been established.

When the cascade controller is enabled and running normally and the drive issues a trip alarm, the system head is maintained by staging and de-staging fixed speed pumps. To prevent frequent staging and de-staging and minimize pressure fluctuations, a wider fixed speed bandwidth is used instead of the staging bandwidth.

6.1.9. Pump Staging with Lead Pump Alternation

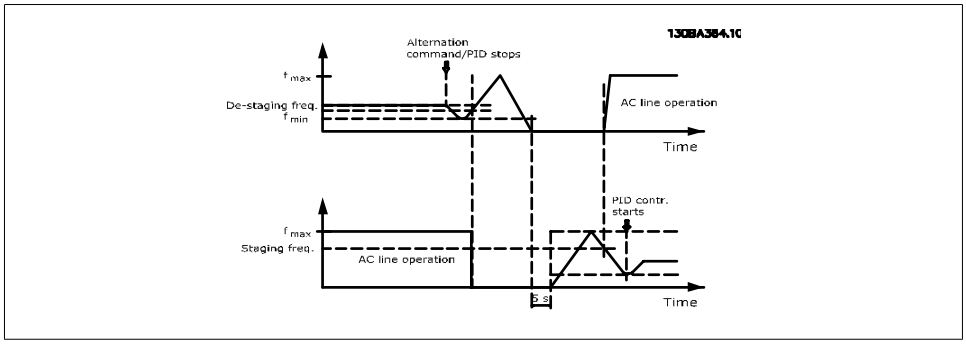

With lead pump alternation enabled, a maximum of two pumps are controlled. At an alternation command, the lead pump will ramp to minimum frequency (fmin), and after a delay, it will ramp to maximum frequency (fmax). When the speed of the lead pump reaches the de-staging frequency, the fixed speed pump will be cut out (de-staged). The lead pump continues to ramp up, then ramps down to a stop, and the two relays are cut out.

After a time delay, the relay for the fixed speed pump cuts in (staged) and this pump becomes the new lead pump. The new lead pump ramps up to maximum speed, and then down to minimum speed; when ramping down and reaching the staging frequency, the old lead pump is now cut in (staged) on the line power as the new fixed speed pump.

If the lead pump has been running at minimum frequency (fmin) for a programmed amount of time with a fixed speed pump running, the lead pump contributes little to the system. When the programmed value of the timer expires, the lead pump is removed, avoiding a heat water-circulation problem.

6.1.10. System Status and Operation

If the lead pump goes into sleep mode, the function is displayed on the local control panel. It is possible to alternate the lead pump on a sleep mode condition.

When the cascade controller is enabled, the operation status for each pump and the cascade controller is displayed on the local control panel. Information displayed includes:

- Pumps Status, a read-out of the status for the relays assigned to each pump. The display shows pumps that are disabled, off, running on the adjustable frequency drive, or running on the line power/motor starter.
- Cascade Status, a readout of the status for the cascade controller. The display indicates when: the cascade controller is disabled, all pumps are off, emergency has stopped all pumps, all pumps are running, fixed speed pumps are being staged/de-staged, and lead pump alternation is occurring.
- De-staging at No-Flow ensures that all fixed speed pumps are stopped individually until the no-flow status disappears.

6.1.11. Fixed Variable Speed Pump Wiring Diagram

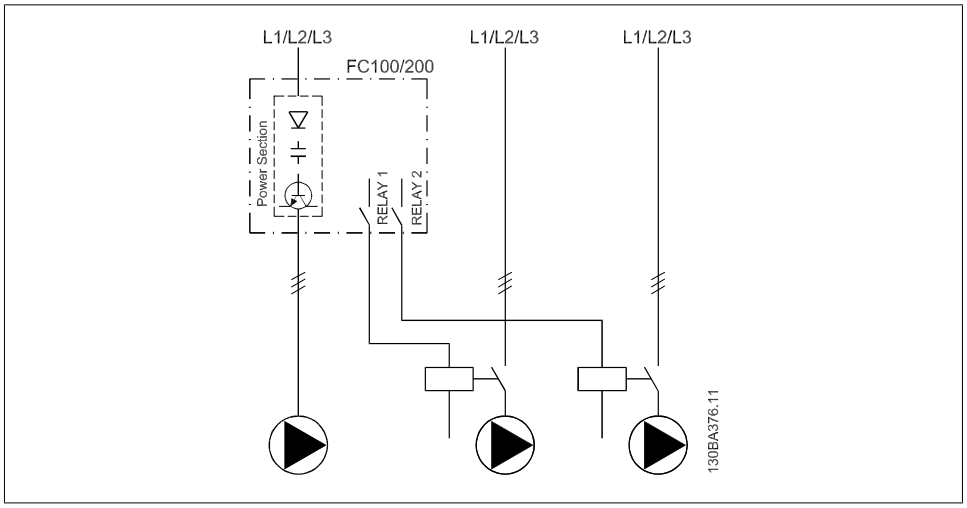

6

6.1.12. Lead Pump Alternation Wiring Diagram

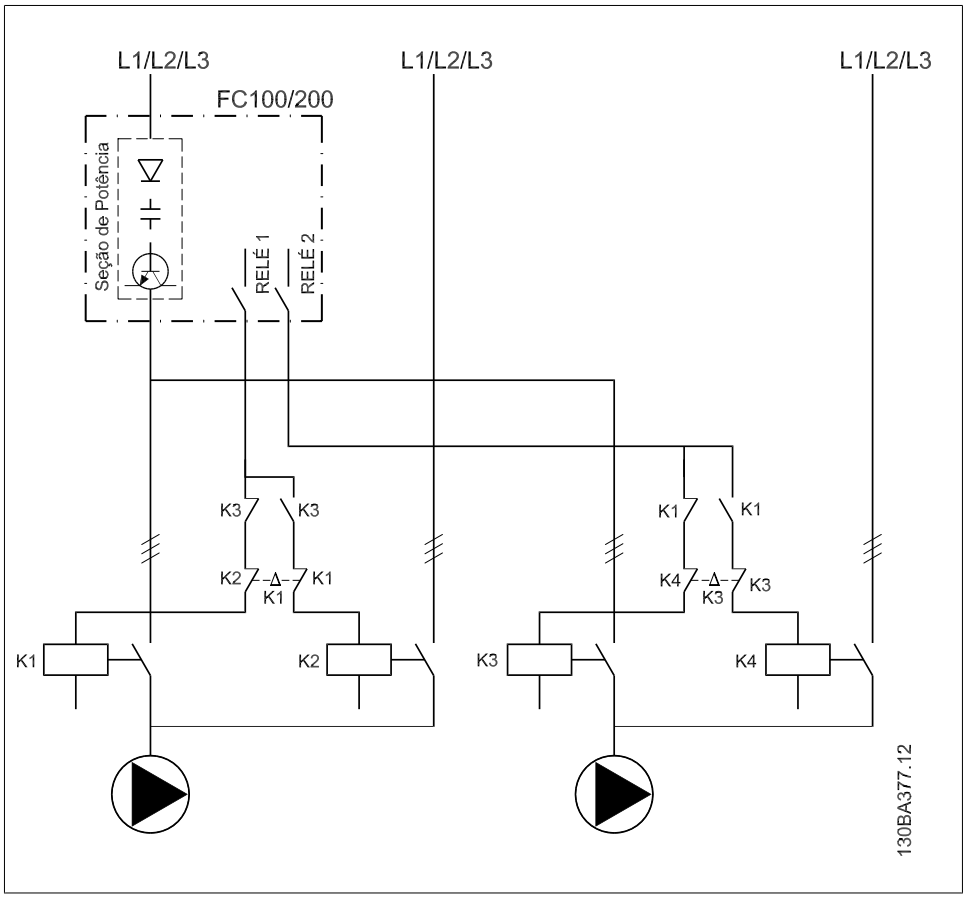

Every pump must be connected to two contactors (K1/K2 and K3/K4) with a mechanical interlock. Thermal relays or other motor protection devices must be applied according to local regulation and/or individual demands.

- RELAY 1 and RELAY 2 are the built-in relays in the adjustable frequency drive.
- When all relays are de-energized, the first built-in relay to be energized will cut in the contactor corresponding to the pump controlled by the relay. For example, RELAY 1 cuts in contactor K1, which then becomes the lead pump.
- K1 blocks K2 via the mechanical interlock, preventing line power to be connected to the output of the adjustable frequency drive (via K1).
- Auxiliary break contact on K1 prevents K3 from cutting in.
- RELAY 2 controls contactor K4 for on/off control of the fixed speed pump.
- At alternation, both relays de-energize, and RELAY 2 will be energized as the first relay.

6.1.13. Cascade Controller Wiring Diagram

The wiring diagram shows an example with the built in BASIC cascade controller with one variable speed pump (lead) and two fixed speed pumps, a 4-20 mA transmitter and system safety interlock.

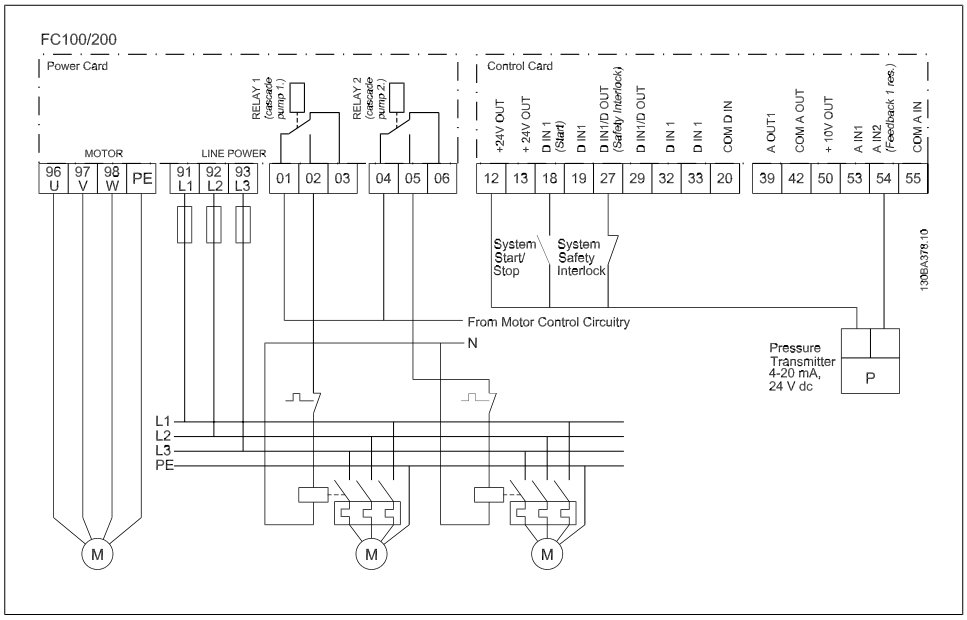

6.1.14. Start/Stop conditions

Commands assigned to digital inputs. See *Digital Inputs*, par.5-1*.

	Variable speed pump (lead)	Fixed speed pumps
Start (SYSTEM START /STOP)	Ramps up (if stopped and there is a demand)	Staging (if stopped and there is a demand)
Lead Pump Start	Ramps up if SYSTEM START is active	Not affected
Coast (EMERGENCY STOP)	Coast to stop	Cut out (built in relays are de-energized)
Safety Interlock	Coast to stop	Cut out (built in relays are de-energized)

Function of buttons on Local Control Panel:

	Variable speed pump (lead)	Fixed speed pumps
Hand On	Ramps up (if stopped by a normal stop command) or stays in operation if already running.	De-staging (if running)
Off	Ramps down	Ramps down
Auto On	Starts and stops according to commands sent via terminals or serial bus.	Staging/De-staging

6

6.1.15. Compressor Cascade Control

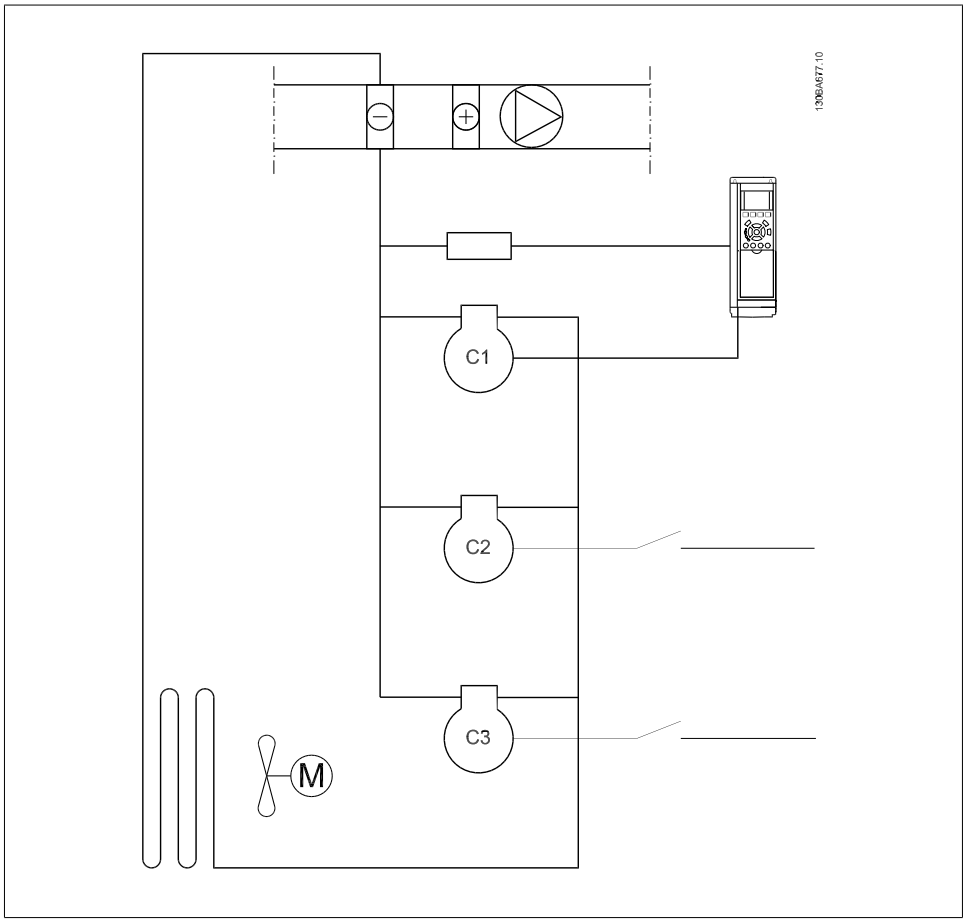

The BASIC cascade controller can also be used to control of up to three compressors for capacity control. As the compressors normally not are allowed to go below a certain speed, the compressor

for variable speed control (C1) will typically be around twice the power size of the fixed speed compressors (C2 and C3).

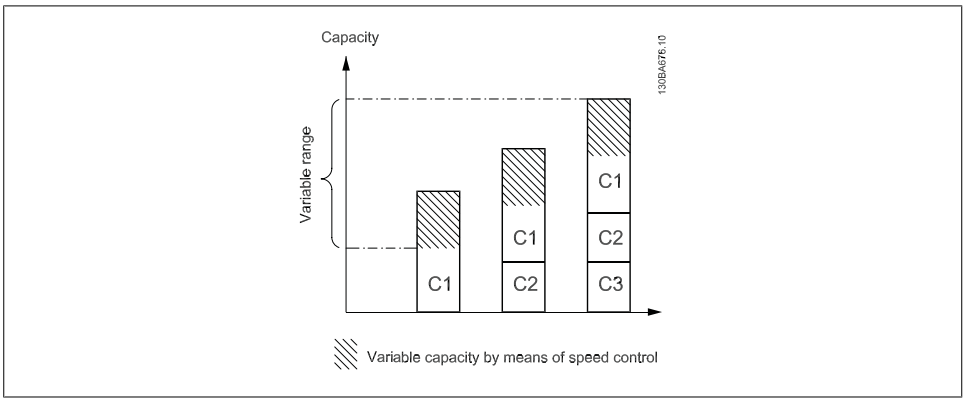

The BASIC cascade controller offers the following features which are dedicated to compressor control: *Short cycle protection (Interval Between Starts and Minimum Run Tim) is active with individual counters for each compressor (but common settings of the values. See parameter group 22-7*, Short Cycle Protection). If the staging or de-staging is locked because of one of the Short Cycle Protection timers, the PID controller will be frozen.

*If the feedback (suction pressure) drops below a certain value (parameters 25-10, Minimum Run Time Override and 25-11, Minimum Run Time Override Value) because the Minimum Run Time function does not allow a cut out of a fixed speed compressor, the Minimum Run Time function will be overridden and the fixed speed compressor with the highest run time will be cut out.

NOTE
If controlling the suction pressure parameter 20-81, PID Normal/Inverse Control must be set to Inverse.

7. RS-485 Installation and Set-up

7.1. RS-485 Installation and Set-up

7.1.1. Overview

RS-485 is a two-wire bus interface compatible with multi-drop network topology, i.e., nodes can be connected as a bus, or via drop cables from a common trunk line. A total of 32 nodes can be connected to one network segment.
Network segments are divided up by repeaters. Please note that each repeater functions as a node within the segment in which it is installed. Each node connected within a given network must have a unique node address across all segments.
Terminate each segment at both ends using either the termination switch (S801) of the adjustable frequency drives or a biased termination resistor network. Always use shielded twisted pair (STP) cable for bus cabling, and always follow good common installation practice.
Low-impedance ground connection of the shield at every node is very important, also at high frequencies. This can be achieved by connecting a large surface of the shield to ground, by means of a cable clamp or a conductive cable gland, for example. It may be necessary to apply potential-equalizing cables to maintain the same ground potential throughout the network, particularly in installations where there are long lengths of cable.
To prevent impedance mismatch, always use the same type of cable throughout the entire network. When connecting a motor to the adjustable frequency drive, always use shielded motor cable.

Cable: Shielded twisted pair (STP)
Impedance: 120 Ohm
Cable length: Max. 3,396 ft [1,200 m] (including drop lines)
Max. 1,640 ft [500 m] station-to-station

7.1.2. Network Connection

Connect the adjustable frequency drive to the RS-485 network as follows (see also diagram):

1. Connect signal wires to terminal 68 (P+) and terminal 69 (N-) on the main control board of the adjustable frequency drive.
2. Connect the cable shield to the cable clamps.

NOTE
Shielded, twisted-pair cables are recommended in order to reduce noise between conductors.

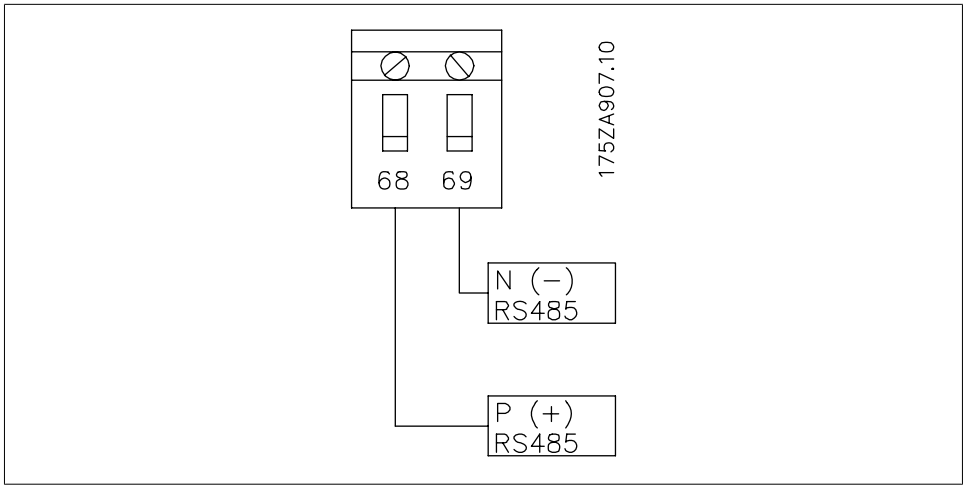

7.1: Network Terminal Connection

7.1.3. Adjustable Frequency Drive Hardware Set-up

Use the terminator dip switch on the main control board of the adjustable frequency drive to terminate the RS-485 bus.

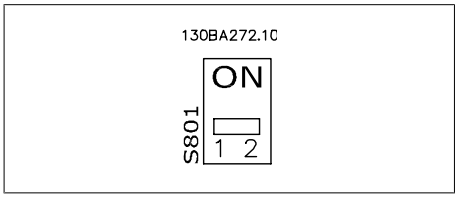

Terminator Switch Factory Setting

NOTE
The factory setting for the dip switch is OFF.

7.1.4. Adjustable Frequency Drive Parameter Settings for Modbus Communication

The following parameters apply to the RS-485 interface (FC-port):

Parameter Number	Parameter name	Function
8-30	Protocol	Select the application protocol to run on the RS-485 interface
8-31	Address	Set the node address. Note: The address range depends on the protocol selected in par. 8-30
8-32	Baud Rate	Set the baud rate. Note: The default baud rate depends on the protocol selected in par. 8-30
8-33	PC port parity/Stop bits	Set the parity and number of stop bits. Note: The default selection depends on the protocol selected in par. 8-30
8-35	Min. response delay	Specify a minimum delay time between receiving a request and transmitting a response. This can be used for overcoming modem turnaround delays.
8-36	Max. response delay	Specify a maximum delay time between transmitting a request and receiving a response.
8-37	Max. inter-char delay	Specify a maximum delay time between two received bytes to ensure timeout if transmission is interrupted.

7.1.5. EMC Precautions

The following EMC precautions are recommended in order to achieve interference-free operation of the RS-485 network.

NOTE
Relevant national and local regulations, for example, regarding protective ground connection, must be observed. The RS-485 communication cable must be kept away from motor and brake resistor cables to avoid coupling of high frequency noise from one cable to another. Normally a distance of 200 mm (8 inches) is sufficient, but keeping the greatest possible distance between the cables is generally recommended, especially where cables run in parallel over long distances. When crossing is unavoidable, the RS-485 cable must cross motor and brake resistor cables at an angle of 90 degrees.

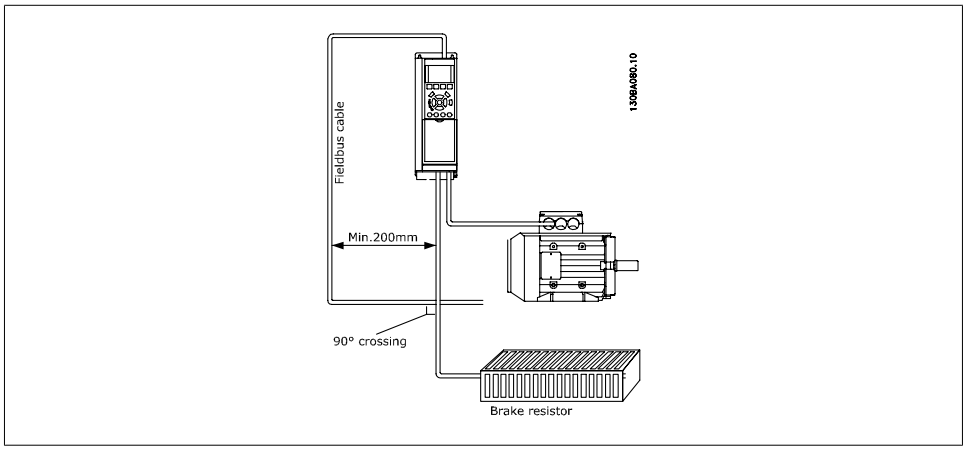

7.2. FC Protocol Overview

7

The FC protocol, also referred to as FC bus or Standard bus, is the Danfoss Drives standard serial communication bus. It defines an access technique according to the master-slave principle for communications via a serial bus.
One master and a maximum of 126 slaves can be connected to the bus. The individual slaves are selected by the master via an address character in the telegram. A slave itself can never transmit without first being requested to do so, and direct message transfer between the individual slaves is not possible. Communications occur in the half-duplex mode.
The master function cannot be transferred to another node (single-master system).

The physical layer is RS-485, thus utilizing the RS-485 port built into the adjustable frequency drive. The FC protocol supports different telegram formats; a short format of 8 bytes for process data, and a long format of 16 bytes that also includes a parameter channel. A third telegram format is used for texts.

7.2.1. FC with Modbus RTU

The FC protocol provides access to the control word and bus reference of the adjustable frequency drive.

The control word allows the modbus master to control several important functions of the adjustable frequency drive:

- Start
- Stop of the adjustable frequency drive in various ways:
  Coast stop
  Quick stop
  DC Brake stop
  Normal (ramp) stop
- Reset after a fault trip
- Run at a variety of preset speeds
- Run in reverse

- Change of the active set-up
- Control of the two relays built into the adjustable frequency drive

The bus reference is commonly used for speed control. It is also possible to access the parameters, read their values, and where possible, write values to them. This permits a range of control options, including controlling the setpoint of the adjustable frequency drive when its internal PID controller is used.

7.3. Network Configuration

7.3.1. Adjustable Frequency Drive Set-up

Set the following parameters to enable the FC protocol for the VLT HVAC.

Parameter Number	Parameter Name	Setting
8-30	Protocol	FC
8-31	Address	1 - 126
8-32	Baud Rate	2400 - 115200
8-33	Parity/Stop bits	Even parity, 1 stop bit (default)

7.4. FC Protocol Message Framing Structure

7.4.1. Content of a Character (byte)

Each character transferred begins with a start bit. Then 8 data bits are transferred, corresponding to a byte. Each character is secured via a parity bit, which is set at "1" when it reaches parity (i.e., when there is an equal number of 1's in the 8 data bits and the parity bit in total). A character is completed by a stop bit, thus consisting of 11 bits in all.

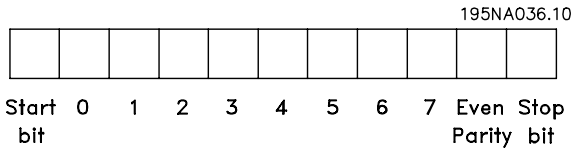

7.4.2. Message Structure

Each telegram begins with a start character (STX)=02 Hex, followed by a byte denoting the message length (LGE) and a byte denoting the adjustable frequency drive address (ADR). A number of data bytes (variable, depending on the type of telegram) follows. The telegram is completed by a data control byte (BCC).

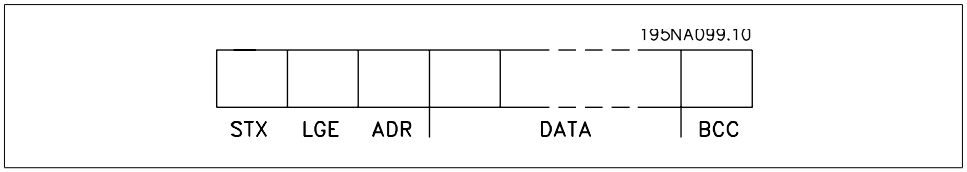

7.4.3. Message Length (LGE)

The message length is the number of data bytes plus the address byte ADR and the data control byte BCC.

7

The length of telegrams with 4 data bytes is	LGE = 4 + 1 + 1 = 6 bytes
The length of telegrams with 12 data bytes is	LGE = 12 + 1 + 1 = 14 bytes
The length of telegrams containing texts is	10[1)]+n bytes

[1)] The 10 represents the fixed characters, while the "n" is variable (depending on the length of the text).

7.4.4. Adjustable Frequency Drive Address (ADR)

Two different address formats are used.
The address range of the adjustable frequency drive is either 1-31 or 1-126.

1. Address format 1-31:
Bit 7 = 0 (address format 1-31 active)
Bit 6 is not used
Bit 5 = 1: Broadcast, address bits (0-4) are not used
Bit 5 = 0: No Broadcast
Bit 0-4 = Adjustable frequency drive address 1-31

2. Address format 1-126:
Bit 7 = 1 (address format 1-126 active)
Bit 0-6 = Adjustable frequency drive address 1-126
Bit 0-6 = 0 Broadcast

The slave returns the address byte unchanged to the master in the response telegram.

7.4.5. Data Control Byte (BCC)

The checksum is calculated as an XOR-function. Before the first byte in the telegram is received, the calculated checksum is 0.

7.4.6. The Data Field

The structure of data blocks depends on the type of telegram. There are three telegram types, and the type applies for both control telegrams (master=>slave) and response telegrams (slave=>master).

The three types of telegram are:

Process block (PCD):
The PCD is made up of a data block of four bytes (2 words) and contains:
- Control word and reference value (from master to slave)
- Status word and present output frequency (from slave to master).

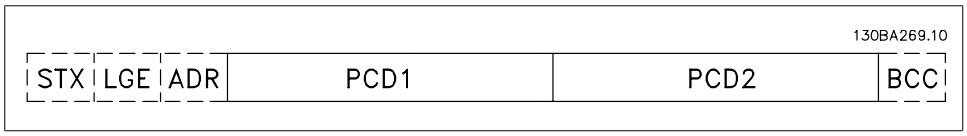

Parameter block:
The parameter block is used to transfer parameters between master and slave. The data block is made up of 12 bytes (6 words) and also contains the process block.

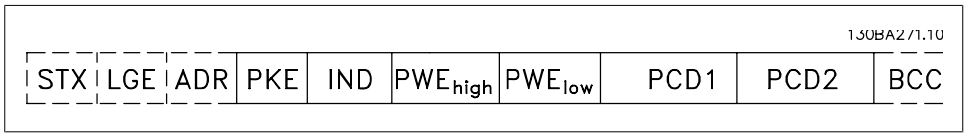

Text block:
The text block is used to read or write texts via the data block.

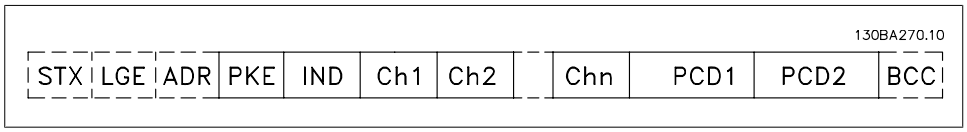

7.4.7. The PKE Field

The PKE field contains two sub-fields: Parameter command and response AK, and parameter number PNU:

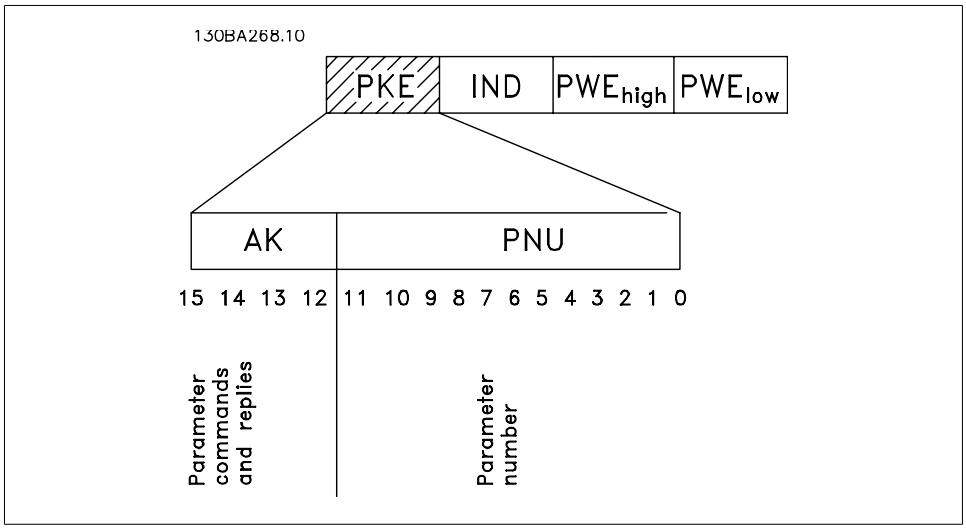

Bits no. 12-15 transfer parameter commands from master to slave and return processed slave responses to the master.

Parameter commands master ⇒ slave

Bit no.				Parameter command
15	14	13	12	
0	0	0	0	No command
0	0	0	1	Read parameter value
0	0	1	0	Write parameter value in RAM (word)
0	0	1	1	Write parameter value in RAM (double word)
1	1	0	1	Write parameter value in RAM and EEPROM (double word)
1	1	1	0	Write parameter value in RAM and EEPROM (word)
1	1	1	1	Read/write text

Response slave ⇒master

Bit no.				Response
15	14	13	12	
0	0	0	0	No response
0	0	0	1	Parameter value transferred (word)
0	0	1	0	Parameter value transferred (double word)
0	1	1	1	Command cannot be performed
1	1	1	1	text transferred

If the command cannot be performed, the slave sends this response:
0111 Command cannot be performed
- and issues the following fault report in the parameter value (PWE):

PWE low (Hex)	Fault Report
0	The parameter number used does not exit.
1	There is no write access to the defined parameter.
2	Data value exceeds the parameter's limits.
3	The sub index used does not exit.
4	The parameter is not the array type.
5	The data type does not match the defined parameter.
11	Data change in the defined parameter is not possible in the adjustable frequency drive's present mode. Certain parameters can only be changed when the motor is turned off.
82	There is no bus access to the defined parameter.
83	Data change is not possible because the factory set-up is selected.

7.4.8. Parameter Number (PNU)

Bits no. 0-10 transfer parameter numbers. The function of the relevant parameter is defined in the parameter description in the chapter entitled *How to Program*.

7.4.9. Index (IND)

The index is used together with the parameter number to read/write-access parameters with an index, e.g., par. 15-30 *Error Code*. The index consists of 2 bytes, a low byte and a high byte.

NOTE
Only the low byte is used as an index.

7.4.10. Parameter Value (PWE)

The parameter value block consists of 2 words (4 bytes), and the value depends on the defined command (AK). The master prompts for a parameter value when the PWE block contains no value. To change a parameter value (write), write the new value in the PWE block and send from the master to the slave.

When a slave responds to a parameter request (read command), the present parameter value in the PWE block is transferred and returned to the master. If a parameter contains not a numerical value but several data options, such as par. 0-01 Language where [0] corresponds to English, and [4] corresponds to Danish, select the data value by entering the value in the PWE block. See Example - Selecting a data value. Serial communication is only capable of reading parameters containing data type 9 (text string).

Parameters 15-40 to 15-53 contain data type 9.
For example, read the unit size and line voltage range in par. 15-40 *FC Type*. When a text string is transferred (read), the length of the telegram is variable, and the texts are of different lengths. The message length is defined in the second byte of the telegram, LGE. When using text transfer, the index character indicates whether it is a read or a write command.

To read a text via the PWE block, set the parameter command (AK) to 'F' Hex. The index character high-byte must be "4".

Some parameters contain text that can be written to via the serial bus. To write a text via the PWE block, set the parameter command (AK) to 'F' Hex. The index character's high-byte must be "5".

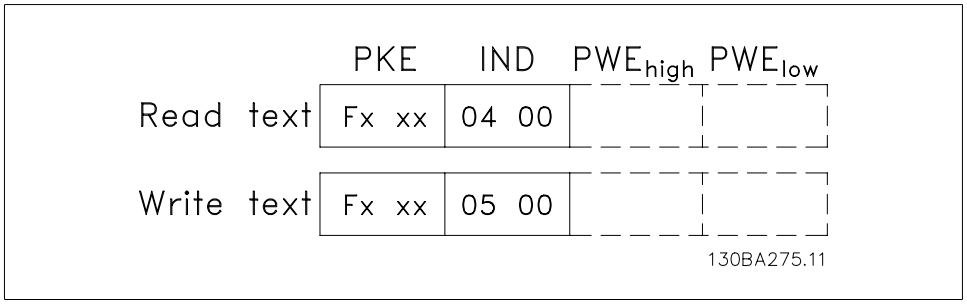

7.4.11. Data Types Supported by the Adjustable Frequency Drive

Data types	Description
3	Integer 16
4	Integer 32
5	Unsigned 8
6	Unsigned 16
7	Unsigned 32
9	Text string
10	Byte string
13	Time difference
33	Reserved
35	Bit sequence

Unsigned means that there is no operational sign in the telegram.

7.4.12. Conversion

The various attributes of each parameter are displayed in the section entitled "Factory Settings." Parameter values are transferred as whole numbers only. Conversion factors are therefore used to transfer decimals.

Par. 4-12 *Motor Speed, Low Limit* has a conversion factor of 0.1.
To preset the minimum frequency to 10 Hz, transfer the value 100. A conversion factor of 0.1 means that the value transferred is multiplied by 0.1. The value 100 is thus perceived as 10.0.

Conversion table

Conversion index	Conversion factor
74	0.1
2	100
1	10
0	1
-1	0.1
-2	0.01
-3	0.001
-4	0.0001
-5	0.00001

7.4.13. Process Words (PCD)

The block of process words is divided into two blocks of 16 bits, which always occur in the defined sequence.

PCD 1	PCD 2
Control telegram (master⇒slave control word)	Reference value
Control telegram (slave ⇒master) status word	Present output frequency

7.5. Examples

7.5.1. Writing a parameter value

Change par. 4-14 *Motor Speed High Limit [Hz]* to 100 Hz.
Write the data in EEPROM.

PKE = E19E Hex - Write single word in par. 4-14 *Motor Speed High Limit [Hz]*
IND = 0000 Hex
PWEHIGH = 0000 Hex
PWELOW = 03E8 Hex - Data value 1000, corresponding to 100 Hz, see Conversion.

The telegram will look like this:

130BA092.10

PKE	IND	PWE_{high}	PWE_{low}
E19E H	0000 H	0000 H	03E8 H

Note: Parameter 4-14 is a single word, and the parameter command for write in EEPROM is "E". Parameter number 414 is 19E in hexadecimal.

The response from the slave to the master will be:

130BA093.10

PKE	IND	PWE_{high}	PWE_{low}
119E H	0000 H	0000 H	03E8 H

7.5.2. Reading a parameter value

Read the value in par. 3-41 *Ramp 1 Up Time.*

PKE = 1155 Hex - Read parameter value in par. 3-41 *Ramp 1 Up Time*
IND = 0000 Hex
PWEHIGH = 0000 Hex
PWELOW = 0000 Hex

130BA094.10

PKE	IND	PWE_{high}	PWE_{low}
1155 H	0000 H	0000 H	0000 H

If the value in par. 3-41 *Ramp 1 Up Time* is 10 s, the response from the slave to the master will be:

130BA267.10

PKE	IND	PWE_{high}	PWE_{low}
1155 H	0000 H	0000 H	03E8 H

NOTE
3E8 Hex corresponds to 1000 decimal. The conversion index for par. 3-41 is -2, i.e., 0.01.

7.6. Modbus RTU Overview

7.6.1. Assumptions

This instruction manual assumes that the installed controller supports the interfaces in this document and that all the requirements stipulated in the controller, as well as the adjustable frequency drive, are strictly observed, along with all limitations therein.

7.6.2. What the User Should Already Know

The Modbus RTU (Remote Terminal Unit) is designed to communicate with any controller that supports the interfaces defined in this document. It is assumed that the user has full knowledge of the capabilities and limitations of the controller.

7.6.3. Modbus RTU Overview

Regardless of the type of physical communication networks, the Modbus RTU Overview describes the process a controller uses to request access to another device. This includes, among other things, how it will respond to requests from another device, and how errors will be detected and reported. It also establishes a common format for the layout and contents of message fields.
While communicating over a Modbus RTU network, the protocol determines how each controller will learn its device address, recognize a message addressed to it, determine the kind of action to be taken and extract any data or other information contained in the message. If a reply is required, the controller will construct the reply message and send it.
Controllers communicate using a master-slave technique in which only one device (the master) can initiate transactions (called queries). The other devices (slaves) respond by supplying the requested data to the master or taking the action requested in the query.
The master can address individual slaves or initiate a broadcast message to all slaves. Slaves return a message (called a response) to queries that are addressed to them individually. No responses are returned to broadcast queries from the master. The Modbus RTU protocol establishes the format for the master's query by placing into it the device (or broadcast) address, a function code defining the requested action, any data to be sent and an error-checking field. The slave's response message is also constructed using Modbus protocol. It contains fields confirming the action taken, any data to be returned and an error-checking field. If an error occurs in receipt of the message, or if the slave is unable to perform the requested action, the slave will construct an error message and send it in response, or a timeout will occur.

7.6.4. Adjustable Frequency Drive with Modbus RTU

The adjustable frequency drive communicates in Modbus RTU format over the built-in RS-485 interface. Modbus RTU provides access to the control word and bus reference of the adjustable frequency drive.

The control word allows the modbus master to control several important functions of the adjustable frequency drive:

- Start
- Stop of the adjustable frequency drive in various ways:
  Coast stop
  Quick stop
  DC Brake stop
  Normal (ramp) stop
- Reset after a fault trip
- Run at a variety of preset speeds
- Run in reverse
- Change the active set-up
- Control the adjustable frequency drive's two built-in relays

The bus reference is commonly used for speed control. It is also possible to access the parameters, read their values, and where possible, write values to them. This permits a range of control options, including controlling the setpoint of the adjustable frequency drive when its internal PID controller is used.

7.7. Network Configuration

To enable Modbus RTU on the adjustable frequency drive, set the following parameters:

Parameter Number	Parameter name	Setting
8-30	Protocol	Modbus RTU
8-31	Address	1 - 247
8-32	Baud Rate	2400 - 115200
8-33	Parity/Stop bits	Even parity, 1 stop bit (default)

7.8. Modbus RTU Message Framing Structure

7.8.1. Adjustable Frequency Drive with Modbus RTU

The controllers are set up to communicate on the Modbus network in RTU (Remote Terminal Unit) mode, with each 8-bit byte in a message containing two 4-bit hexadecimal characters. The format for each byte is shown below.

Start bit	Data bit									Stop parity	Stop

Coding System	8-bit binary, hexadecimal 0-9, A-F. Two hexadecimal characters contained in each 8-bit field of the message
Bits Per Byte	1 start bit 8 data bits, least significant bit sent first 1 bit for even/odd parity; no bit for no parity 1 stop bit if parity is used; 2 bits if no parity
Error Check Field	Cyclical Redundancy Check (CRC)

7.8.2. Modbus RTU Message Structure

The transmitting device places a Modbus RTU message into a frame with a known beginning and ending point. This allows receiving devices to begin at the start of the message, read the address portion, determine which device is addressed (or all devices, if the message is broadcast), and to recognize when the message is completed. Partial messages are detected, and errors are set as a result. Characters for transmission must be in hexadecimal 00 to FF format in each field. The adjustable frequency drive continuously monitors the network bus, also during 'silent' intervals. When the first field (the address field) is received, each adjustable frequency drive or device decodes it to determine which device is being addressed. Modbus RTU messages addressed to zero are broadcast messages. No response is permitted for broadcast messages. A typical message frame is shown below.

Typical Modbus RTU Message Structure

Start	Address	Function	Data	CRC check	End
T1-T2-T3-T4	8 bits	8 bits	N x 8 bits	16 bits	T1-T2-T3-T4

7.8.3. Start / Stop Field

Messages start with a silent period of at least 3.5 character intervals. This is implemented as a multiple of character intervals at the selected network baud rate (shown as Start T1-T2-T3-T4). The first field to be transmitted is the device address. Following the last transmitted character, a similar period of at least 3.5 character intervals marks the end of the message. A new message can begin after this period. The entire message frame must be transmitted as a continuous stream. If a silent period of more than 1.5 character intervals occurs before completion of the frame, the receiving device flushes the incomplete message and assumes that the next byte will be the address field of a new message. Similarly, if a new message begins prior to 3.5 character intervals after a previous message, the receiving device will consider it a continuation of the previous message. This will cause a time-out (no response from the slave), since the value in the final CRC field will not be valid for the combined messages.

7.8.4. Address Field

The address field of a message frame contains 8 bits. Valid slave device addresses are in the range of 0–247 decimal. The individual slave devices are assigned addresses in the range of 1–247. (0 is reserved for broadcast mode, which all slaves recognize.) A master addresses a slave by placing

the slave address in the address field of the message. When the slave sends its response, it places its own address in this address field to let the master know which slave is responding.

7.8.5. Function Field

The function field of a message frame contains 8 bits. Valid codes are in the range of 1-FF. Function fields are used to send messages between master and slave. When a message is sent from a master to a slave device, the function code field tells the slave what kind of action to perform. When the slave responds to the master, it uses the function code field to indicate either a normal (error-free) response, or that some kind of error occurred (called an exception response). For a normal response, the slave simply echoes the original function code. For an exception response, the slave returns a code that is equivalent to the original function code with its most significant bit set to logic 1. In addition, the slave places a unique code into the data field of the response message. This tells the master what kind of error occurred, or the reason for the exception. Please also refer to the sections *Function Codes Supported by Modbus RTU* and *Exception Codes.*

7.8.6. Data Field

The data field is constructed using sets of two hexadecimal digits, in the range of 00 to FF hexadecimal. These are made up of one RTU character. The data field of messages sent from a master to slave device contains additional information that the slave must use to take the action defined by the function code. This can include items such as coil or register addresses, the quantity of items to be handled and the count of actual data bytes in the field.

7.8.7. CRC Check Field

Messages include an error-checking field, operating on the basis of a Cyclical Redundancy Check (CRC) method. The CRC field checks the contents of the entire message. It is applied regardless of any parity check method used for the individual characters of the message. The CRC value is calculated by the transmitting device, which appends the CRC as the last field in the message. The receiving device recalculates a CRC during receipt of the message and compares the calculated value to the actual value received in the CRC field. If the two values are unequal, a bus timeout results. The error-checking field contains a 16-bit binary value implemented as two 8-bit bytes. When this is done, the low-order byte of the field is appended first, followed by the high-order byte. The CRC high-order byte is the last byte sent in the message.

7.8.8. Coil Register Addressing

In Modbus, all data are organized in coils and holding registers. Coils hold a single bit, whereas holding registers hold a 2-byte word (i.e., 16 bits). All data addresses in Modbus messages are referenced to zero. The first occurrence of a data item is addressed as item number zero. For example: The coil known as 'coil 1' in a programmable controller is addressed as coil 0000 in the data address field of a Modbus message. Coil 127 decimal is addressed as coil 007EHEX (126 decimal).
Holding register 40001 is addressed as register 0000 in the data address field of the message. The function code field already specifies a 'holding register' operation. Therefore, the '4XXXX' reference is implicit. Holding register 40108 is addressed as register 006BHEX (107 decimal).

Coil Number	Description	Signal Direction
1-16	Adjustable frequency drive control word (see table below)	Master to slave
17-32	Adjustable frequency drive speed or setpoint reference Range 0x0 – 0xFFFF (-200% ... ~200%)	Master to slave
33-48	Adjustable frequency drive status word (see table below)	Slave to master
49-64	Open-loop mode: Adjustable frequency drive output frequency closed-loop mode: Adjustable frequency drive feedback signal	Slave to master
65	Parameter write control (master to slave) 0 = Parameter changes are written to the RAM of the adjustable frequency drive. 1 = Parameter changes are written to the RAM and EEPROM of the adjustable frequency drive.	Master to slave
66-65536	Reserved	

7

Coil	0	1
01	Preset reference LSB	
02	Preset reference MSB	
03	DC brake	No DC brake
04	Coast stop	No coast stop
05	Quick stop	No quick stop
06	Freeze freq.	No freeze freq.
07	Ramp stop	Start
08	No reset	Reset
09	No jog	Jog
10	Ramp 1	Ramp 2
11	Data not valid	Data valid
12	Relay 1 off	Relay 1 on
13	Relay 2 off	Relay 2 on
14	Set-up LSB	
15	Set-up MSB	
16	No reversing	Reversing
Adjustable frequency drive control word (FC profile)		

Coil	0	1
33	Control not ready	Control ready
34	Adjustable frequency drive not ready	Adjustable frequency drive ready
35	Coasting stop	Safety closed
36	No alarm	Alarm
37	Not used	Not used
38	Not used	Not used
39	Not used	Not used
40	No warning	Warning
41	Not at reference	At reference
42	Hand mode	Auto mode
43	Out of freq. range	In frequency range
44	Stopped	Running
45	Not used	Not used
46	No voltage warning	Voltage warning
47	Not in current limit	Current limit
48	No thermal warning	Thermal warning
Adjustable frequency drive status word (FC profile)		

Holding registers	
Register Number	**Description**
00001-00006	Reserved
00007	Last error code from an FC data object interface
00008	Reserved
00009	Parameter index*
00100-00999	000 parameter group (parameters 001 through 099)
01000-01999	100 parameter group (parameters 100 through 199)
02000-02999	200 parameter group (parameters 200 through 299)
03000-03999	300 parameter group (parameters 300 through 399)
04000-04999	400 parameter group (parameters 400 through 499)
...	...
49000-49999	4900 parameter group (parameters 4900 through 4999)
500000	Input data: Adjustable frequency drive control word register (CTW).
50010	Input data: Bus reference register (REF).
...	...
50200	Output data: Adjustable frequency drive status word register (STW).
50210	Output data: Adjustable frequency drive main actual value register (MAV).

* Used to specify the index number to be used when accessing an indexed parameter.

7.8.9. How to Control the Adjustable Frequency Drive

This section describes codes that can be used in the function and data fields of a Modbus RTU message. For a complete description of all the message fields, please refer to the section *Modbus RTU Message Framing Structure.*

7.8.10. Function Codes Supported by Modbus RTU

Modbus RTU supports use of the following function codes in the function field of a message:

Function	Function Code
Read coils	1 hex
Read holding registers	3 hex
Write single coil	5 hex
Write single register	6 hex
Write multiple coils	F hex
Write multiple registers	10 hex
Get comm. event counter	B hex
Report slave ID	11 hex

Function	Function Code	Sub-function code	Sub-function
Diagnostics	8	1	Restart communication
		2	Return diagnostic register
		10	Clear counters and diagnostic register
		11	Return bus message count
		12	Return bus communication error count
		13	Return bus exception error count
		14	Return slave message count

7.8.11. Exception Codes

In the event of an error, the following exception codes may appear in the data field of a response message. For a full explanation of the structure of an exception (i.e., error) response, please refer to the section *Modbus RTU Message Framing Structure, Function Field.*

Exception code in data field (decimal)	Exception code description
00	The parameter number does not exit.
01	There is no write access to the parameter.
02	The data value exceeds the parameter limits.
03	The sub-index in use does not exit.
04	The parameter is not of the array type.
05	The data type does not match the parameter called
06	Only reset
07	Not changeable
11	No write access
17	Data change in the parameter called is not possible in the present mode.
18	Other error
64	Invalid data address
65	Invalid message length
66	Invalid data length or value
67	Invalid function code
130	There is no bus access to the parameter called.
131	Data change is not possible because the factory set-up is selected.

7.9. How to Access Parameters

7.9.1. Parameter Handling

The PNU (Parameter Number) is translated from the register address contained in the Modbus read or write message. The parameter number is translated to Modbus as (10 x parameter number) DECIMAL.

7.9.2. Storage of Data

The Coil 65 decimal determines whether data written to the adjustable frequency drive is stored in EEPROM and RAM (coil 65 = 1), or only in RAM (coil 65 = 0).

7.9.3. IND

The array index is set in Holding Register 9 and used when accessing array parameters.

7.9.4. Text Blocks

Parameters stored as text strings are accessed in the same way as the other parameters. The maximum text block size is 20 characters. If a read request for a parameter is for more characters than the parameter stores, the response is truncated. If the read request for a parameter is fewer characters than the parameter stores, the response is space-filled.

7.9.5. Conversion Factor

The different attributes for each parameter can be seen in the section on factory settings. Since a parameter value can only be transferred as a whole number, a conversion factor must be used to transfer decimals. Please refer to the *Parameters section*.

7.9.6. Parameter Values

Standard Data Types
Standard data types are int16, int32, uint8, uint16 and uint32. They are stored as 4x registers (40001 – 4FFFF). The parameters are read using function 03HEX "Read Holding Registers." Parameters are written using the function 6HEX "Preset Single Register" for 1 register (16 bits), and the function 10HEX "Preset Multiple Registers" for 2 registers (32 bits). Readable sizes range from 1 register (16 bits) up to 10 registers (20 characters).

Non standard Data Types
Non standard data types are text strings stored as 4x registers (40001 – 4FFFF). The parameters are read using function 03HEX "Read Holding Registers" and written using function 10HEX "Preset Multiple Registers." Readable sizes range from 1 register (2 characters) up to 10 registers (20 characters).

7.10. Examples

The following examples illustrate various Modbus RTU commands. If an error occurs, please refer to the Exception Codes section.

7.10.1. Read Coil Status (01 HEX)

Description
This function reads the ON/OFF status of discrete outputs (coils) in the adjustable frequency drive. Broadcast is never supported for reads.

Query
The query message specifies the starting coil and quantity of coils to be read. Coil addresses start at zero, i.e., coil 33 is addressed as 32.

Example of a request to read coils 33-48 (Status Word) from slave device 01:

Field Name	Example (HEX)
Slave Address	01 (adjustable frequency drive address)
Function	01 (read coils)
Starting Address HI	00
Starting Address LO	20 (32 decimals)
No. of Points HI	00
No. of Points LO	10 (16 decimals)
Error Check (CRC)	-

Response
The coil status in the response message is packed as one coil per bit of the data field. Status is indicated as: 1 = ON; 0 = OFF. The LSB of the first data byte contains the coil addressed in the query. The other coils follow toward the high order end of this byte, and from 'low order to high order' in subsequent bytes.
If the returned coil quantity is not a multiple of eight, the remaining bits in the final data byte will be padded with zeros (toward the high order end of the byte). The Byte Count field specifies the number of complete bytes of data.

Field Name	Example (HEX)
Slave Address	01 (adjustable frequency drive address)
Function	01 (read coils)
Byte Count	02 (2 bytes of data)
Data (Coils 40-33)	07
Data (Coils 48-41)	06 (STW=0607hex)
Error Check (CRC)	-

7.10.2. Force/Write Single Coil (05 HEX)

Description
This function forces a coil to either ON or OFF. When broadcast, the function forces the same coil references in all attached slaves.

Query
The query message specifies the coil 65 (parameter write control) to be forced. Coil addresses start at zero, i.e., coil 65 is addressed as 64. Force Data = 00 00HEX (OFF) or FF 00HEX (ON).

Field Name	Example (HEX)
Slave Address	01 (adjustable frequency drive address)
Function	05 (write single coil)
Coil Address HI	00
Coil Address LO	40 (coil no. 65)
Force Data HI	FF
Force Data LO	00 (FF 00 = ON)
Error Check (CRC)	-

Response
The normal response is an echo of the query, which is returned after the coil state has been forced.

Field Name	Example (HEX)
Slave Address	01
Function	05
Force Data HI	FF
Force Data LO	00
Quantity of Coils HI	00
Quantity of Coils LO	01
Error Check (CRC)	-

7.10.3. Force/Write Multiple Coils (0F HEX)

This function forces each coil in a sequence of coils to either ON or OFF. When broadcast, the function forces the same coil references in all attached slaves.

The query message specifies the coils 17 to 32 (speed setpoint) to be forced. Coil addresses start at zero, i.e., coil 17 is addressed as 16.

Field Name	Example (HEX)
Slave Address	01 (adjustable frequency drive address)
Function	0F (write multiple coils)
Coil Address HI	00
Coil Address LO	10 (coil address 17)
Quantity of Coils HI	00
Quantity of Coils LO	10 (16 coils)
Byte Count	02
Force Data HI (Coils 8-1)	20
Force Data LO (Coils 10-9)	00 (ref. = 2000hex)
Error Check (CRC)	-

Response
The normal response returns the slave address, function code, starting address and quantity of coils forced.

Field Name	Example (HEX)
Slave Address	01 (adjustable frequency drive address)
Function	0F (write multiple coils)
Coil Address HI	00
Coil Address LO	10 (coil address 17)
Quantity of Coils HI	00
Quantity of Coils LO	10 (16 coils)
Error Check (CRC)	-

7.10.4. Read Holding Registers (03 HEX)

Description
This function reads the contents of holding registers in the slave.

Query
The query message specifies the starting register and quantity of registers to be read. Register addresses start at zero, i.e., registers 1-4 are addressed as 0-3.

Field Name	Example (HEX)
Slave Address	01
Function	03 (read holding registers)
Starting Address HI	00
Starting Address LO	00 (coil address 17)
No. of Points HI	00
No. of Points LO	03
Error Check (CRC)	-

Response
The register data in the response message are packed as two bytes per register, with the binary contents right-justified within each byte. For each register, the first byte contains the high order bits, while the second contains the low order bits.

Field Name	Example (HEX)
Slave Address	01
Function	03
Byte Count	06
Data HI (Register 40001)	55
Data LO (Register 40001)	AA
Data HI (Register 40002)	55
Data LO (Register 40002)	AA
Data HI (Register 40003)	55
Data LO (Register 40003)	AA
Error Check (CRC)	-

7.10.5. Preset Single Register (06 HEX)

Description
This function presets a value into a single holding register.

Query
The query message specifies the register reference to be preset. Register addresses start at zero, i.e., register 1 is addressed as 0.

Field Name	Example (HEX)
Slave Address	01
Function	06
Register Address HI	00
Register Address LO	01
Preset Data HI	00
Preset Data LO	03
Error Check (CRC)	-

Response
Response: the normal response is an echo of the query, which is returned after the register contents have been passed.

Field Name	Example (HEX)
Slave Address	01
Function	06
Register Address HI	00
Register Address LO	01
Preset Data HI	00
Preset Data LO	03
Error Check (CRC)	-

7.10.6. Preset Multiple Registers (10 HEX)

Description
This function presets values into a sequence of holding registers.

Query
The query message specifies the register references to be preset. Register addresses start at zero, i.e., register 1 is addressed as 0. Example of a request to preset two registers (set parameter 1-05 = 738 (7.38 A)):

Field Name	Example (HEX)
Slave Address	01
Function	10
Starting Address HI	04
Starting Address LO	19
No. of Registers HI	00
No. of registers LO	02
Byte Count	04
Write Data HI (Register 4: 1049)	00
Write Data LO (Register 4: 1049)	00
Write Data HI (Register 4: 1050)	02
Write Data LO (Register 4: 1050)	E2
Error Check (CRC)	-

Response
The normal response returns the slave address, function code, starting address and quantity of preset registers.

Field Name	Example (HEX)
Slave Address	01
Function	10
Starting Address HI	04
Starting Address LO	19
No. of Registers HI	00
No. of registers LO	02
Error Check (CRC)	-

7.11. Danfoss FC Control Profile

7.11.1. Control Word According to FC Profile (Par. 8-10 = FC profile)

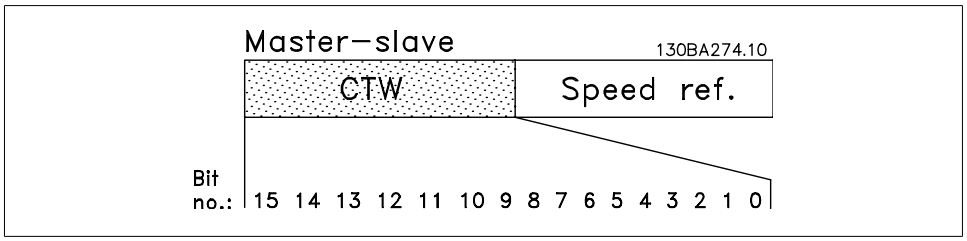

Bit	Bit value = 0	Bit value = 1
00	Reference value	external selection lsb
01	Reference value	external selection msb
02	DC brake	Ramp
03	Coasting	No coasting
04	Quick stop	Ramp
05	Hold output frequency	use ramp
06	Ramp stop	Start
07	No function	Reset
08	No function	Jog
09	Ramp 1	Ramp 2
10	Data invalid	Data valid
11	No function	Relay 01 active
12	No function	Relay 02 active
13	Parameter set-up	selection lsb
14	Parameter set-up	selection msb
15	No function	Reverse

Explanation of the Control Bits

Bits 00/01

Bits 00 and 01 are used to choose between the four reference values, which are pre-programmed in par. 3-10 *Preset reference* according to the following table:

Programmed ref. value	Par.	Bit 01	Bit 00
1	3-10 [0]	0	0
2	3-10 [1]	0	1
3	3-10 [2]	1	0
4	3-10 [3]	1	1

NOTE
Make a selection in par. 8-56 *Preset Reference Select* to define how Bit 00/01 gates with the corresponding function on the digital inputs.

Bit 02, DC brake:

Bit 02 = '0' leads to DC braking and stop. Set braking current and duration in par. 2-01 *DC Brake Current* and 2-02 *DC Braking Time* . Bit 02 = '1' leads to ramping.

Bit 03, Coasting:
Bit 03 = '0': The adjustable frequency drive immediately "lets go" of the motor (the output transistors are "shut off"), and it coasts to a standstill. Bit 03 = '1': The adjustable frequency drive starts the motor if the other starting conditions are met.

NOTE
Make a selection in par. 8-50 *Coasting Select* to define how Bit 03 gates with the corresponding function on a digital input.

Bit 04, Quick stop:
Bit 04 = '0': Makes the motor speed ramp down to stop (set in par. 3-81 *Quick Stop Ramp Time*.

Bit 05, Hold output frequency
Bit 05 = '0': The present output frequency (in Hz) freezes. Change the frozen output frequency only by means of the digital inputs (par. 5-10 to 5-15) programmed to *Speed up* and *Slow down*.

NOTE
If freeze output is active, the adjustable frequency drive can only be stopped by the following:

- Bit 03 Coasting stop
- Bit 02 DC braking
- Digital input (par. 5-10 to 5-15) programmed to *DC braking*, *Coasting stop*, or *Reset* and *coasting stop*.

Bit 06, Ramp stop/start:
Bit 06 = '0': Causes a stop and makes the motor speed ramp down to stop via the selected ramp down par. Bit 06 = '1': Permits the adjustable frequency drive to start the motor if the other starting conditions are met.

NOTE
Make a selection in par. 8-53 *Start Select* to define how Bit 06 Ramp stop/start gates with the corresponding function on a digital input.

Bit 07, Reset: Bit 07 = '0': No reset. Bit 07 = '1': Resets a trip. Reset is activated on the leading edge of the signal, i.e., when changing from logic '0' to logic '1'.

Bit 08, Jog:
Bit 08 = '1': The output frequency is determined by par. 3-19 *Jog Speed*.

Bit 09, Selection of ramp 1/2:
Bit 09 = "0": Ramp 1 is active (par. 3-40 to 3-47). Bit 09 = "1": Ramp 2 (par. 3-50 to 3-57) is active.

Bit 10, Data not valid/Data valid:
Tell the adjustable frequency drive whether to use or ignore the control word. Bit 10 = ’0’: The control word is ignored. Bit 10 = ’1’: The control word is used. This function is relevant because the telegram always contains the control word, regardless of the telegram type. Thus, you can turn off the control word if you do not want to use it when updating or reading parameters.

Bit 11, Relay 01:
Bit 11 = "0": Relay not activated. Bit 11 = "1": Relay 01 activated provided that *Control word bit 11* is chosen in par. 5-40 *Function relay*.

Bit 12, Relay 04:
Bit 12 = "0": Relay 04 is not activated. Bit 12 = "1": Relay 04 is activated provided that *Control word bit 12* is chosen in par. 5-40 *Function relay*.

Bit 13/14, Selection of set-up:
Use bits 13 and 14 to choose from the four menu set-ups according to the shown table: .

Set-up	Bit 14	Bit 13
1	0	0
2	0	1
3	1	0
4	1	1

The function is only possible when *Multi Set-ups* is selected in par. 0-10 *Active Set-up.*

NOTE
Make a selection in par. 8-55 *Set-up select* to define how Bit 13/14 gates with the corresponding function on the digital inputs.

Bit 15 Reverse:
Bit 15 = ’0’: No reversing. Bit 15 = ’1’: Reversing. In the default setting, reversing is set to digital in par. 8-54 *Reversing Select*. Bit 15 causes reversing only when Ser. communication, Logic or or Logic and is selected.

7.11.2. Status Word According to FC Profile (STW) (Par. 8-10 = FC profile)

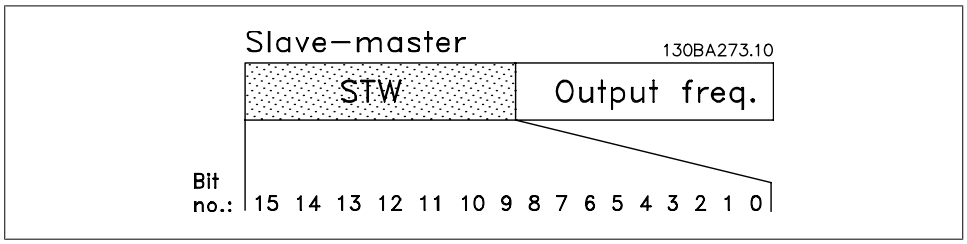

Bit	Bit = 0	Bit = 1
00	Control not ready	Control ready
01	Drive not ready	Drive ready
02	Coasting	Enable
03	No error	Trip
04	No error	Error (no trip)
05	Reserved	-
06	No error	Triplock
07	No warning	Warning
08	Speed ≠ reference	Speed = reference
09	Local operation	Bus control
10	Out of frequency limit	Frequency limit OK
11	No operation	In operation
12	Drive OK	Stopped, auto start
13	Voltage OK	Voltage exceeded
14	Torque OK	Torque exceeded
15	Timer OK	Timer exceeded

Explanation of the Status Bits

Bit 00, Control not ready/ready:

Bit 00 = ’0’: The adj. frequency drive trips. Bit 00 = ’1’: The adjustable frequency drive controls are ready, but the power component does not necessarily receive any power supply (in case of external 24 V supply to controls).

Bit 01, Drive ready:

Bit 01 = ’1’: The adjustable frequency drive is ready for operation, but the coasting command is active via the digital inputs or via serial communication.

Bit 02, Coasting stop:

Bit 02 = ’0’: The adjustable frequency drive releases the motor. Bit 02 = ’1’: The adjustable frequency drive starts the motor with a start command.

Bit 03, No error/trip:

Bit 03 =’0’: The adjustable frequency drive is not in fault mode. Bit 03 = ’1’: The adj. frequency drive trips. To re-establish operation, enter [Reset].

Bit 04, No error/error (no trip):

Bit 04 = ’0’: The adjustable frequency drive is not in fault mode. Bit 04 = “1”: The adjustable frequency drive shows an error but does not trip.

Bit 05, Not used:
Bit 05 is not used in the status word.

Bit 06, No error / triplock:
Bit 06 = '0': The adjustable frequency drive is not in fault mode. Bit 06 = "1": The adjustable frequency drive is tripped and locked.

Bit 07, No warning/warning:
Bit 07 = '0': There are no warnings. Bit 07 = '1': A warning has occurred.

Bit 08, Speed≠ reference/speed = reference:
Bit 08 = '0': The motor is running, but the present speed is different from the preset speed reference. For example, this might be the case when the speed ramps up/down during start/stop. Bit 08 = '1': The motor speed matches the preset speed reference.

Bit 09, Local operation/bus control:
Bit 09 = '0': [STOP/RESET] is activate on the control unit or *Local control* in par. 3-13 *Reference Site* is selected. You cannot control the adjustable frequency drive via serial communication. Bit 09 = '1' It is possible to control the adjustable frequency drive via serial communication or the serial communication bus.

Bit 10, Out of frequency limit:
Bit 10 = '0': The output frequency has reached the value in par. 4-11 *Motor Speed Low Limit* or par. 4-13 *Motor Speed High Limit*. Bit 10 = "1": The output frequency is within the defined limits.

Bit 11, No operation/in operation:
Bit 11 = '0': The motor is not running. Bit 11 = '1': The adjustable frequency drive has a start signal, or the output frequency is greater than 0 Hz.

Bit 12, Drive OK/stopped, autostart:
Bit 12 = '0': There is no temporary overtemperature in the inverter. Bit 12 = '1': The inverter stops because of overtemperature, but the unit does not trip and will resume operation once the overtemperature stops.

Bit 13, Voltage OK/limit exceeded:
Bit 13 = '0': There are no voltage warnings. Bit 13 = '1': The DC voltage in the intermediate circuit of the adjustable frequency drive is too low or too high.

Bit 14, Torque OK/limit exceeded:
Bit 14 = '0': The motor current is lower than the torque limit selected in par. 4-18 *Current Limit*. Bit 14 = '1': The torque limit in par. 4-18 *Current Limit* is exceeded.

Bit 15, Timer OK/limit exceeded:
Bit 15 = '0': The timers for motor thermal protection and VLT thermal protection have not exceeded 100%. Bit 15 = '1': One of the timers exceeds 100%.

NOTE
All bits in the STW are set to '0' if the connection between the Interbus option and the adjustable frequency drive is lost, or if an internal communication problem has occurred.

7.11.3. Bus Speed Reference Value

Speed reference value is transmitted to the adjustable frequency drive in a relative value in %. The value is transmitted in the form of a 16-bit word; in integers (0-32767) the value 16384 (4000 Hex) corresponds to 100%. Negative figures are formatted by means of 2's complement. The Actual Output frequency (MAV) is scaled in the same way as the bus reference.

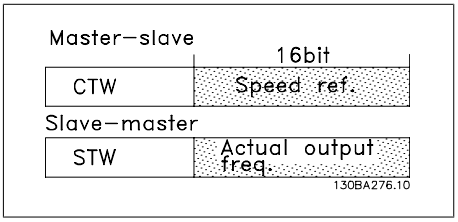

The reference and MAV are scaled as follows:

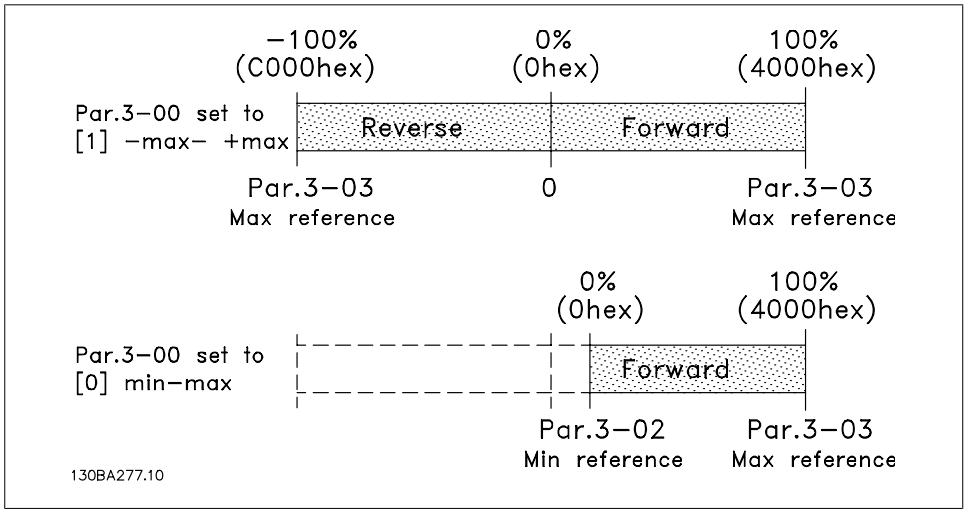

8

8. Troubleshooting

8.1.1. Alarms and warnings

A warning or an alarm is signaled by the relevant LED on the front of the adjustable frequency drive, indicated by a code on the display.

A warning remains active until its cause is no longer present. Under certain circumstances, operation of the motor may still be continued. Warning messages may be critical, but are not necessarily so.

In the event of an alarm, the adjustable frequency drive will have tripped. Alarms must be reset to restart operation once their cause has been rectified. This may be done in four ways:

1. By using the [RESET] control button on the LCP control panel.
2. Via a digital input with the "Reset" function.
3. Via serial communication/optional serial communication bus.
4. By resetting automatically using the [Auto Reset] function, which is a default setting for VLT HVAC Drive. See *par. 14-20 Reset Mode* in *VLT® HVAC Drive Programming Guide, MG.11Cx.yy*

NOTE
After a manual reset using the [RESET] button on the LCP, the [AUTO ON] button must be pressed to restart the motor.

If an alarm cannot be reset, the reason may be that its cause has not been rectified, or that the alarm is trip-locked (see also the table on following page).

Alarms that are trip-locked offer additional protection; this means that the line supply must be switched off before the alarm can be reset. After being switched back on, the adjustable frequency drive is no longer blocked and may be reset as described above, once the cause has been rectified.

Alarms that are not trip-locked can also be reset using the automatic reset function in parameter 14-20 (Warning: automatic wake-up is possible!)

If a warning and alarm is marked against a code in the table on the following page, this means that either a warning occurs before an alarm, or that it can be specified whether it is a warning or an alarm that is to be displayed for a given fault.

This is possible, for instance, in parameter 1-90 *Motor Thermal Protection.* After an alarm or trip, the motor carries on coasting, and the alarm and warning flash on the adjustable frequency drive. Once the problem has been rectified, only the alarm continues flashing.

No.	Description	Warn-ing	Alarm/Trip	Alarm/Trip Lock	Parameter Refer-ence
1	10 Volts low	X			
2	Live zero error	(X)	(X)		6-01
3	No motor	(X)			1-80
4	Line phase loss	(X)	(X)	(X)	14-12
5	DC link voltage high	X			
6	DC link voltage low	X			
7	DC overvoltage	X	X		
8	DC undervoltage	X	X		
9	Inverter overloaded	X	X		
10	Motor ETR overtemperature	(X)	(X)		1-90
11	Motor thermistor overtemperature	(X)	(X)		1-90
12	Torque limit	X	X		
13	Overcurrent	X	X	X	
14	Ground fault	X	X	X	
15	Incomp. HW		X	X	
16	Short Circuit		X	X	
17	Control word timeout	(X)	(X)		8-04
23	Internal fans				
24	External fans				
25	Brake resistor short-circuited	X			
26	Brake resistor power limit	(X)	(X)		2-13
27	Brake chopper short-circuited	X	X		
28	Brake check	(X)	(X)		2-15
29	Power board overtemp.	X	X	X	
30	Motor phase U missing	(X)	(X)	(X)	4-58
31	Motor phase V missing	(X)	(X)	(X)	4-58
32	Motor phase W missing	(X)	(X)	(X)	4-58
33	Soft-charge fault		X	X	
34	Serial communication bus fault	X	X		
36	Line failure				
38	Internal fault		X	X	
40	Overload T27				
41	Overload T29				
42	Overload X30/6-7				
47	24 V supply low	X	X	X	
48	1.8 V supply low		X	X	
49	Speed limit				
50	AMA calibration failed		X		
51	AMA check U_{nom} and I_{nom}		X		
52	AMA low I_{nom}		X		
53	AMA motor too big		X		
54	AMA motor too small		X		
55	AMA parameter out of range		X		
56	AMA interrupted by user		X		
57	AMA timeout		X		
58	AMA internal fault	X	X		
59	Current limit	X			
60	External interlock				
62	Output Frequency at Maximum Limit	X			
64	Voltage Limit	X			
65	Control Board Overtemperature	X	X	X	
66	Heatsink Temperature Low	X			
67	Option Configuration Has Changed		X		
68	Safe Stop Activated		X		
70	Illegal FC configuration				
80	Drive Initialized to Default Value		X		
92	No-Flow	X	X		22-2*
93	Dry Pump	X	X		22-2*
94	End of Curve	X	X		22-5*
95	Broken Belt	X	X		22-6*
96	Start Delayed	X			22-7*
97	Stop Delayed	X			22-7*
98	Clock Fault	X			0-7*

8.1: Alarm/Warning code list

No.	Description	Warn-ing	Alarm/Trip	Alarm/Trip Lock	Parameter Refer-ence
200	Fire Mode	X			24-0*
201	Fire Mode Was Active	X			0-7*
202	Fire Mode Limits Exceeded	X			0-7*
250	New spare part				
251	New type code				

8.2: Alarm/Warning code list, continued.

(X) Dependent on parameter

LED indication

Warning	yellow
Alarm	flashing red
Trip-locked	yellow and red

Alarm Word and Extended Status Word

Bit	Hex	Dec	Alarm Word	Warning Word	Extended Status Word
0	00000001	1	Brake Check	Brake Check	Ramping
1	00000002	2	Pwr. Card Temp	Pwr. Card Temp	AMA Running
2	00000004	4	Ground Fault	Ground Fault	Start CW/CCW
3	00000008	8	Ctrl.Card Temp	Ctrl.Card Temp	Slow-down
4	00000010	16	Ctrl. Word TO	Ctrl. Word TO	Catch Up
5	00000020	32	Overcurrent	Overcurrent	Feedback High
6	00000040	64	Torque Limit	Torque Limit	Feedback Low
7	00000080	128	Motor Th Over	Motor Th Over	Output Current High
8	00000100	256	Motor ETR Over	Motor ETR Over	Output Current Low
9	00000200	512	Inverter Overld.	Inverter Overld.	Output Freq High
10	00000400	1024	DC Undervolt	DC Undervolt	Output Freq Low
11	00000800	2048	DC Overvolt	DC Overvolt	Brake Check OK
12	00001000	4096	Short Circuit	DC Voltage Low	Braking Max
13	00002000	8192	Soft-charge fault	DC Voltage High	Braking
14	00004000	16384	Line ph. Loss	Line ph. Loss	Out of Speed Range
15	00008000	32768	AMA Not OK	No Motor	OVC Active
16	00010000	65536	Live Zero Error	Live Zero Error	
17	00020000	131072	Internal Fault	10 V Low	
18	00040000	262144	Brake Overload	Brake Overload	
19	00080000	524288	U-phase Loss	Brake Resistor	
20	00100000	1048576	V-phase Loss	Brake IGBT	
21	00200000	2097152	W-phase Loss	Speed Limit	
22	00400000	4194304	Ser. com. bus fault	Ser. com. bus fault	
23	00800000	8388608	24 V Supply Low	24 V Supply Low	
24	01000000	16777216	Line Failure	Line Failure	
25	02000000	33554432	1.8 V Supply Low	Current Limit	
26	04000000	67108864	Brake Resistor	Low Temp	
27	08000000	134217728	Brake IGBT	Voltage Limit	
28	10000000	268435456	Option Change	Unused	
29	20000000	536870912	Drive Initialized	Unused	
30	40000000	1073741824	Safe Stop	Unused	

8.3: Description of Alarm Word, Warning Word and Extended Status Word

The alarm words, warning words and extended status words can be read out for diagnosis via serial bus or optional serial communication bus. See also par. 16-90, 16-92 and 16-94.

8.1.2. Alarm words

Alarm word, 16-90

Bit (Hex)	Alarm Word (Par. 16-90)
00000001	Brake check
00000002	Power card over-temperature
00000004	Ground fault
00000008	Ctrl. card overtem-perature
00000010	Control word time-out
00000020	Overcurrent
00000040	Torque limit
00000080	Motor thermistor overtemp.
00000100	Motor ETR overtem-perature
00000200	Inverter overloaded
00000400	DC link undervolt-age
00000800	DC link overvoltage
00001000	Short circuit
00002000	Soft-charge fault
00004000	Line phase loss
00008000	AMA not OK
00010000	Live zero error
00020000	Internal fault
00040000	Brake overload
00080000	Motor phase U is missing
00100000	Motor phase V is missing
00200000	Motor phase W is missing
00400000	Ser. com. bus fault
00800000	24 V supply fault
01000000	Line failure
02000000	1.8 V supply fault
04000000	Brake resistor short circuit
08000000	Brake chopper fault
10000000	Option change
20000000	Drive initialized
40000000	Safe Stop
80000000	Not used

Alarm word 2, 16-91

Bit (Hex)	Alarm Word 2 (Par. 16-91)
00000001	Service Trip, read / write
00000002	Reserved
00000004	Service Trip, Type code / Spare part
00000008	Reserved
00000010	Reserved
00000020	No Flow
00000040	Dry Pump
00000080	End of Curve
00000100	Broken Belt
00000200	Not used
00000400	Not used
00000800	Reserved
00001000	Reserved
00002000	Reserved
00004000	Reserved
00008000	Reserved
00010000	Reserved
00020000	Not used
00040000	Fans error
00080000	ECB error
00100000	Reserved
00200000	Reserved
00400000	Reserved
00800000	Reserved
01000000	Reserved
02000000	Reserved
04000000	Reserved
08000000	Reserved
10000000	Reserved
20000000	Reserved
40000000	Reserved
80000000	Reserved

8.1.3. Warning words

Warning word, 16-92

Bit (Hex)	Warning Word (Par. 16-92)
00000001	Brake check
00000002	Power card over-temperature
00000004	Ground fault
00000008	Ctrl. card overtem-perature
00000010	Control word time-out
00000020	Overcurrent
00000040	Torque limit
00000080	Motor thermistor overtemp.
00000100	Motor ETR overtem-perature
00000200	Inverter overloaded
00000400	DC link undervolt-age
00000800	DC link overvoltage
00001000	DC link voltage low
00002000	DC link voltage high
00004000	Line phase loss
00008000	No motor
00010000	Live zero error
00020000	10 V low
00040000	Brake resistor pow-er limit
00080000	Brake resistor short circuit
00100000	Brake chopper fault
00200000	Speed limit
00400000	Ser. com. bus fault
00800000	24 V supply fault
01000000	Line failure
02000000	Current limit
04000000	Low temperature
08000000	Voltage limit
10000000	Encoder loss
20000000	Output frequency limit
40000000	Not used
80000000	Not used

Warning word 2, 16-93

Bit (Hex)	Warning Word 2 (Par. 16-93)
00000001	Start Delayed
00000002	Stop Delayed
00000004	Clock Failure
00000008	Reserved
00000010	Reserved
00000020	No Flow
00000040	Dry Pump
00000080	End of Curve
00000100	Broken Belt
00000200	Not used
00000400	Reserved
00000800	Reserved
00001000	Reserved
00002000	Reserved
00004000	Reserved
00008000	Reserved
00010000	Reserved
00020000	Not used
00040000	Fans warning
00080000	ECB warning
00100000	Reserved
00200000	Reserved
00400000	Reserved
00800000	Reserved
01000000	Reserved
02000000	Reserved
04000000	Reserved
08000000	Reserved
10000000	Reserved
20000000	Reserved
40000000	Reserved
80000000	Reserved

8.1.4. Extended status words

Extended status word, Par. 16-94

Bit (Hex)	Extended Status Word (Par. 16-94)
00000001	Ramping
00000002	AMA tuning
00000004	Start CW/CCW
00000008	Not used
00000010	Not used
00000020	Feedback high
00000040	Feedback low
00000080	Output current high
00000100	Output current low
00000200	Output frequency high
00000400	Output frequency low
00000800	Brake check OK
00001000	Braking max
00002000	Braking
00004000	Out of speed range
00008000	OVC active
00010000	AC brake
00020000	Password Timelock
00040000	Password Protection
00080000	Reference high
00100000	Reference low
00200000	Local Ref./Remote Ref.
00400000	Reserved
00800000	Reserved
01000000	Reserved
02000000	Reserved
04000000	Reserved
08000000	Reserved
10000000	Reserved
20000000	Reserved
40000000	Reserved
80000000	Reserved

Extended status word 2, 16-95

Bit (Hex)	Extended Status Word 2 (Par. 16-95)
00000001	Off
00000002	Hand / Auto
00000004	Not used
00000008	Not used
00000010	Not used
00000020	Relay 123 active
00000040	Start Prevented
00000080	Control ready
00000100	Drive ready
00000200	Quick Stop
00000400	DC Brake
00000800	Stop
00001000	Standby
00002000	Freeze Output Request
00004000	Freeze Output
00008000	Jog Request
00010000	Jog
00020000	Start Request
00040000	Start
00080000	Start Applied
00100000	Start Delay
00200000	Sleep
00400000	Sleep Boost
00800000	Running
01000000	Bypass
02000000	Fire Mode
04000000	Reserved
08000000	Reserved
10000000	Reserved
20000000	Reserved
40000000	Reserved
80000000	Reserved

MG.11.B5.22 - VLT® is a registered Danfoss trademark.

8.1.5. Fault messages

WARNING 1, 10 Volts low:
The 10 V voltage from terminal 50 on the control card is below 10 V.
Remove a portion of the load from terminal 50, as the 10 V supply is overloaded. Max. 15 mA or minimum 590 Ω.

WARNING/ALARM 2, Live zero error:
The signal on terminal 53 or 54 is less than 50% of the value set in par. 6-10, 6-12, 6-20 or 6-22, respectively.

WARNING/ALARM 3, No motor:
No motor has been connected to the output of the adjustable frequency drive.

WARNING/ALARM 4, Line phase loss:
A phase is missing on the supply side, or the line voltage imbalance is too high.
This message also appears in case of a fault in the input rectifier on the adjustable frequency drive.
Check the supply voltage and supply currents to the adjustable frequency drive.

WARNING 5, DC link voltage high:
The intermediate circuit voltage (DC) is higher than the overvoltage limit of the control system. The adjustable frequency drive is still active.

WARNING 6, DC link voltage low:
The intermediate circuit voltage (DC) is below the undervoltage limit of the control system. The adjustable frequency drive is still active.

WARNING/ALARM 7, DC overvoltage:
If the intermediate circuit voltage exceeds the limit, the adjustable frequency drive trips after a given period of time.

Possible corrections:

Select Overvoltage Control function in par. 2-17

Connect a brake resistor

Extend the ramp time

Activate functions in par. 2-10

Increase par. 14-26

Selecting OVC function will extend the ramp times.

Alarm/warning limits:

VLT HVAC	3 x 200-240 V AC [VDC]	3 x 380-500 V AC [VDC]
Undervoltage	185	373
Voltage warning low	205	410
Voltage warning high (w/o brake - w/brake)	390/405	810/840
Overvoltage	410	855

The voltages stated are the intermediate circuit voltage of the VLT HVAC with a tolerance of ± 5%. The corresponding line voltage is the intermediate circuit voltage (DC link) divided by 1.35.

WARNING/ALARM 8, DC undervoltage:
If the intermediate circuit voltage (DC) drops below the "voltage warning low" limit (see table above), the adjustable frequency drive checks if 24 V backup supply is connected.
If no 24 V backup supply is connected, the adjustable frequency drive trips after a given period of time, depending on the unit.
To check whether the supply voltage matches the adjustable frequency drive, see *3.2 General Specifications*.

WARNING/ALARM 9, Inverter overloaded:
The adjustable frequency drive is about to cut out because of an overload (too high current for too long). The counter for electronic, thermal inverter protection gives a warning at 98% and trips at 100%, while giving an alarm. You cannot reset the adjustable frequency drive until the counter is below 90%.
The fault is that the adjustable frequency drive has been overloaded by more than nominal current for too long.

WARNING/ALARM 10, Motor ETR overtemperature:
According to the electronic thermal protection (ETR), the motor is too hot. You can choose if you want the adjustable frequency drive to give a warning or an alarm when the counter reaches 100% in par. 1-90. The fault is that the motor has been overloaded by more than nominal current for too long. Check that the motor par. 1-24 is set correctly.

8

WARNING/ALARM 11, Motor thermistor overtemp:
The thermistor or the thermistor connection is disconnected. You can choose if you want the adjustable frequency drive to give a warning or an alarm in par. 1-90. Make sure the thermistor is connected correctly between terminal 53 or 54 (analog voltage input) and terminal 50 (+10 V supply), or between terminal 18 or 19 (digital input PNP only) and terminal 50. If a KTY sensor is used, check for correct connection between terminal 54 and 55.

WARNING/ALARM 12, Torque limit:
The torque is higher than the value in par. 4-16 (in motor operation), or the torque is higher than the value in par. 4-17 (in regenerative operation).

WARNING/ALARM 13, Overcurrent:
The inverter peak current limit (approximately 200% of the rated current) is exceeded. The warning will last approximately 8-12 sec., then the adjustable frequency drive trips and issues an alarm. Turn off the adjustable frequency drive and check if the motor shaft can be turned and if the motor size matches the adjustable frequency drive.

ALARM 14, Ground fault:
There is a discharge from the output phases to ground, either in the cable between the adjustable frequency drive and the motor or in the motor itself.
Turn off the adjustable frequency drive and remove the ground fault.

ALARM 15, Incomplete hardware:
A fitted option is not handled by the present control board (hardware or software).

ALARM 16, Short-circuit:
There is a short-circuit in the motor or on the motor terminals.
Turn off the adjustable frequency drive and remove the short-circuit.

WARNING/ALARM 17, Control word timeout:
There is no communication to the adjustable frequency drive.
The warning will only be active when par. 8-04 is NOT set to *OFF*.
If par. 8-04 is set to *Stop and Trip*, a warning appears and the adjustable frequency drive ramps down to zero speed, while giving an alarm.
Par. 8-03 *Control Word Timeout Time* could possibly be increased.

WARNING 23, Internal fans:
External fans have failed due to defective hardware or fans not mounted.

WARNING 24, External fan fault:
The fan warning function is an extra protection function that checks if the fan is running/mounted. The fan warning can be disabled in *Fan Monitor*, par. 14-53, [0] Disabled.

WARNING 25, Brake resistor short-circuited:
The brake resistor is monitored during operation. If it short-circuits, the brake function is disconnected and the warning appears. The adjustable frequency drive still works, but without the brake function. Turn off the adjustable frequency drive and replace the brake resistor (see par. 2-15 *Brake Check*).

ALARM/WARNING 26, Brake resistor power limit:
The power transmitted to the brake resistor is calculated as a percentage, as a mean value over the last 120 s based on the resistance value of the brake resistor (par. 2-11) and the intermediate circuit voltage. The warning is active when the dissipated braking energy is higher than 90%. If *Trip* [2] has been selected in par. 2-13, the adjustable frequency drive cuts out and issues this alarm, when the dissipated braking energy is higher than 100%.

WARNING/ALARM 27, Brake chopper fault:
The brake transistor is monitored during operation, and if it short-circuits, the brake function disconnects and the warning is issued. The adjustable frequency drive is still able to run, but since the brake transistor has short-circuited, substantial power is transmitted to the brake resistor, even if it is inactive.
Turn off the adjustable frequency drive and remove the brake resistor.

> **!** Warning: There is a risk of substantial power being transmitted to the brake resistor if the brake transistor is short-circuited.

ALARM/WARNING 28, Brake check failed:
Brake resistor fault: the brake resistor is not connected/working.

WARNING/ALARM 29, Drive overtemperature:
If the enclosure is IP 00, IP 20/Nema1 or IP 21/TYPE 1, the cut-out temperature of the heatsink is 203ºF +10ºF [95ºC +5ºC]. The temperature fault cannot be reset until the temperature of the heatsink is below 158º F [70º C].

The fault could be a result of:

- Ambient temperature too high
- Motor cable too long

ALARM 30, Motor phase U missing:
Motor phase U between the adjustable frequency drive and the motor is missing.
Turn off the adjustable frequency drive and check motor phase U.

ALARM 31, Motor phase V missing:
Motor phase V between the adjustable frequency drive and the motor is missing.
Turn off the adjustable frequency drive and check motor phase V.

ALARM 32, Motor phase W missing:
Motor phase W between the adjustable frequency drive and the motor is missing.
Turn off the adjustable frequency drive and check motor phase W.

ALARM 33, Soft-charge fault:
Too many power-ups have occurred within a short time period. See the chapter *General Specifications* for the allowed number of power-ups within one minute.

WARNING/ALARM 34, Serial communication bus fault:
The serial communication bus on the communication option card is not working.

WARNING/ALARM 36, Line failure:
This warning/alarm is only active if the supply voltage to the adjustable frequency drive is lost and parameter 14-10 is NOT set to OFF.
Possible correction: check the fuses to the adjustable frequency drive

ALARM 38, Internal fault:
Contact your local Danfoss supplier.

WARNING 40, Overload of Digital Output Terminal 27
Check the load connected to terminal 27 or remove short-circuit connection. Check parameters 5-00 and 5-01.

WARNING 41, Overload of Digital Output Terminal 29:
Check the load connected to terminal 29 or remove short-circuit connection. Check parameters 5-00 and 5-02.

WARNING 42, Overload of Digital Output On X30/6:
Check the load connected to X30/6 or remove short-circuit connection. Check parameter 5-32.

WARNING 42, Overload of Digital Output On X30/7:
Check the load connected to X30/7 or remove short-circuit connection. Check parameter 5-33.

WARNING 47, 24 V supply low:
The external 24 V DC backup power supply may be overloaded, otherwise contact your Danfoss supplier.

ALARM 48, 1.8 V supply low:
Contact your Danfoss supplier.

WARNING 49, Speed limit:
The speed has been limited by range in par. 4-11 and par. 4-13.

ALARM 50, AMA calibration failed:
Contact your Danfoss supplier.

ALARM 51, AMA check Unom and Inom:
The setting of motor voltage, motor current and motor power is presumably wrong. Check the settings.

ALARM 52, AMA low Inom:
The motor current is too low. Check the settings.

ALARM 53, AMA motor too big:
The motor is too big for the AMA to be carried out.

ALARM 54, AMA motor too small:
The motor is too small for the AMA to be carried out.

ALARM 55, AMA par. out of range:
The par. values found from the motor are outside the acceptable range.

ALARM 56, AMA interrupted by user:
The AMA has been interrupted by the user.

ALARM 57, AMA timeout:
Try to start the AMA again a number of times until it is carried out. Please note that repeated runs may heat the motor to a level where the resistances Rs and Rr are increased. In most cases, however, this is not critical.

WARNING/ALARM 58, AMA internal fault:
Contact your Danfoss supplier.

WARNING 59, Current limit:
The current is higher than the value in par. 4-18.

WARNING 60, External Interlock:
External Interlock has been activated. To resume normal operation, apply 24 VDC to the terminal programmed for External Interlock and reset the adjustable frequency drive (via Bus, Digital I/O or by pressing [Reset]).

WARNING 62, Output Frequency at Maximum Limit:
The output frequency is limited by the value set in par. 4-19

WARNING 64, Voltage Limit:
The load and speed combinations demand a motor voltage higher than the actual DC link voltage.

WARNING/ALARM/TRIP 65, Control Card Overtemperature:
Control card overtemperature: The cut-out temperature of the control card is 176°F [80° C].

WARNING 66, Heatsink Temperature Low:
The heatsink temperature is measured as 32° F [0°C]. This could indicate that the temperature sensor is defective and thus the fan speed is increased to the maximum if the power part or the control card is very hot.

ALARM 67, Option Configuration has Changed:
One or more options has either been added or removed since the last power-down.

ALARM 68, Safe Stop:
Safe Stop has been activated. To resume normal operation, apply 24 VDC to terminal 37, then send a reset signal (via Bus, Digital I/O or by pressing [Reset]).

ALARM 70, Illegal Adjustable Frequency Drive Configuration:
Current combination of control board and power board is illegal.

ALARM 80, Drive Initialized to Default Value:
Parameter settings are initialized to default setting after a manual (three-finger) reset or via par. 14-22.

WARNING/ALARM 92, NoFlow:
A no load situation has been detected for the system. See parameter group 22-2*.

WARNING/ALARM 93, Dry Pump:
A no flow situation and high speed indicate that the pump has run dry. See parameter group 22-2*

WARNING/ALARM 94, End of Curve:
Feed back stays lower than the setpoint, which may be indicates a leakage in the pipe system. See parameter group 22-5*

WARNING/ALARM 95, Broken Belt:
Torque is below the torque level set for no load indicating a broken belt. See parameter group 22-6*

WARNING 96, Start Delayed:
Start of the motor has been delayed due to short cycle protection that is active. See parameter group 22-7*.

WARNING 97, Stop Delayed:
Stop of the motor has been delayed due to short cycle protection that is active. See parameter group 22-7*

WARNING 98, Clock Fault:
Date and time has not been set or any back up mounted has failed. See parameter group 0-7*.

WARNING 200, Fire Mode:
The input command Fire Mode is active. See parameter group 24-0*

WARNING 201, Fire M was Active.:
The input command Fire Mode has been active, but now deactivated. See parameter group 0-7*

WARNING 202, Fire M Limits Exceeded:
One or more warranty voiding alarms have been suppressed during fire mode. See parameter group 0-7*

ALARM 250, New Spare Part:
The adjustable frequency drive type code must be restored in the EEPROM. The adjustable frequency drive type code must be restored in the EEPROM. Select the correct type code in Par 14-23 according to the label on unit. Remember to select 'Save to EEPROM' to complete.

ALARM 251, New Type Code:
The adjustable frequency drive has a new type code.

Index

0

0-10 Vdc 85
0-20 Ma 85

2

24 V Backup Option Mcb 107 (option D) 84

3

3-setpoint Pid Controller 27

4

4-20 Ma 85

6

60 Avm 74

A

Abbreviations 8
Ac Line Supply Interference 131
Access To Control Terminals 112
Accessory Bag 101
Acoustic Noise 73
Adjustable Frequency Drive Hardware Set-up 146
Adjustable Frequency Drive Limits 40
Adjustable Frequency Drive Set-up 149
Adjustable Frequency Drive With Modbus Rtu 156
Aggressive Environments 19
Air Humidity 19
Alarm Word, 16-90 180
Aluminum Conductors 108
Ama 134
Analog I/o Option Mcb 109 85
Analog I/o Selection 85
Analog Inputs 10
Analog Inputs 68
Analog Inputs 11
Analog Output 68
Application Examples 25
Automatic Adaptations To Ensure Performance 78
Automatic Motor Adaptation 134
Automatic Motor Adaptation (ama) 117
Awg 59

B

Balancing Contractor 31
Basic Wiring Example 114
Battery Back-up Of Clock Function 85
Block Diagram Of The Drive’s Closed-loop Controller 35
Brake Connection Option 119
Brake Function 53
Brake Resistor 51
Brake Resistor Cabling 54
Brake Resistor Calculation 52
Brake Resistors 87

Braking Energy 11, 54
Braking Time 170
Branch Circuit Protection 108
Break-away Torque 10
Building Management System 85
Bypass Frequency Ranges 28

C

Cable Clamp 130
Cable Clamps 127
Cable Length And Cross-section 107
Cable Lengths And Cross-sections 67
Cav System 27
Ce Conformity And Labeling 17
Central Vav Systems 26
Clockwise Rotation 123
Closed-loop (pid) Controller 35
Closed-loop Control For A Ventilation System 39
Closed-loop Control Relevant Parameters 36
Co2 Sensor 27
Coasting 173
Coasting 8, 171
Communication Option 185
Compressor Cascade Control 142
Compressor Control 45
Condenser Pumps 29
Conducted Emission 47
Configure The Feedback To The Pid Controller 40
Configure The Setpoint Reference For The Pid Controller 40
Connection To Line Power 104
Constant Air Volume 27
Control Cables 127
Control Cables 115
Control Cables 115
Control Card Performance 71
Control Card, +10 V Dc Output 70
Control Card, 24 V Dc Output 69
Control Card, Rs-485 Serial Communication 69
Control Card, Usb Serial Communication 71
Control Characteristics 70
Control Potential 32
Control Structure 33
Control Terminals 113
Control Word 170
Cooling 77, 102
Cooling Tower Fan 28
Copyright, Limitation Of Liability And Revision Rights 6
Cos Φ Compensation 23

D

Dampers 26
Data Types Supported By The Adjustable Frequency Drive 154
Dc Brake 170
Dc Bus Connection 119
Dc Link 183
Decoupling Plate 105
Definitions 8
Derating For Ambient Temperature 74
Derating For Installing Long Motor Cables Or Cables With Larger Cross-section 78
Derating For Low Air Pressure 77

Derating For Running At Low Speed 77
Devicenet 93
Differential Pressure 32
Digital Inputs: 67
Digital Output 69
Direction Of Motor Rotation 123
Disposal Instructions 16
Drive Configurator 91
Du/dt Filters 89

E

Efficiency 71
Electrical Installation 107, 115
Electrical Installation - Emc Precautions 127
Electrical Installation, Control Cable Terminals 113
Emc Directive 89/336/eec 18
Emc Immunity 48
Emc Test Results 47
Enclosure A5 106
Energy Savings 20
Energy Savings 22
Equalizing Cable 130
Etr 122, 183
Evaporator Flow Rate 30
Example Of Closed-loop Pid Control 39
Extended Status Word 2, 16-95 182
Extended Status Word, Par. 16-94 182
External 24 V Dc Supply 84
Extreme Running Conditions 54

F

Fan System Controlled By Adjustable Frequency Drives 24
Fault Messages 183
Fc Profile 170
Fc With Modbus Rtu 148
Feedback 1 Conversion 37
Feedback 1 Source 36
Feedback 1 Source Unit 37
Feedback 2 Conversion 37
Feedback 2 Source 37
Feedback 2 Source Unit 37
Feedback 3 Conversion 37
Feedback 3 Source 37
Feedback 3 Source Unit 37
Feedback Conversion 45
Feedback Function 37
Feedback Handling 44
Final Set-up And Test 116
Flow Meter 30
Freeze Output 8
Fuses 108

G

Galvanic Isolation (pelv) 49
General Specifications 67
General Warning 7
Ground Connection 104
Ground Leakage Current 126
Ground Leakage Current 50
Grounding 130

Grounding Of Shielded/armored Control Cables 130

H

Harmonic Filters 94
High Power Instruction Manual, Mg.11.f1.02 103
High Power Series Line Power And Motor Connections 103
High Voltage Test 126
Hold Output Frequency 171
How To Connect A Pc To The Fc 100 124
How To Control The Adjustable Frequency Drive 161

I

I/os For Setpoint Inputs 85
Igvs 26
Installation At High Altitudes 15
Intermediate Circuit 53, 54, 73, 183
Ip 21/ip 4x/ Type 1 Enclosure Kit 88

J

Jog 9
Jog 171

K

Kty Sensor 184

L

Laws Of Proportionality 21
Lcp 8, 12, 33, 87
Lead Pump Alternation Wiring Diagram 140
Leakage Current 51
Line Drop-out 55
Line Plug Connector 104
Line Supply 13
Line Supply 59, 65
Literature 6
Load Drive Settings 125
Local (hand On) And Remote (auto On) Control 33
Local Speed Determination 30
Low Evaporator Temperature 30
Low-pass Filter Time 38

M

Make Sure That The Motor Is Running In The Right Direction 40
Mcb 105 Option 82
Mct 10 125
Mct 10 Set-up Software 125
Mct 31 126
Mct 31 - Hvac Design Guide 126
Mechanical Dimensions 100
Mechanical Dimensions 99
Mechanical Mounting 102
Modbus Communication 147
Moment Of Inertia 54
Motor Cables 127
Motor Cables 107
Motor Connection 105
Motor Nameplate 117

Motor Nameplate Data 117
Motor Output 67
Motor Parameters 134
Motor Phases 54
Motor Protection 71, 122
Motor Rotation 123
Motor Thermal Protection 174
Motor Thermal Protection 55, 123
Motor Voltage 73
Motor-generated Overvoltage 54
Mounting Of Decoupling Plate 105
Multiple Feedback Signals 36
Multiple Pumps 32
Multi-zone Control 85
Multi-zone, Multi-setpoint 45
Multi-zone, Single Setpoint 44

N

Nameplate Data 117
Ni1000 Temperature Sensor 85
Non-ul Fuses 200 V To 480 V 109

O

On Reference Bandwidth 38
Ordering Numbers 91
Ordering Numbers: Du/dt Filters, 380-480 Vac 97
Ordering Numbers: Du/dt Filters, 525-600 Vac 98
Ordering Numbers: Harmonic Filters 94
Ordering Numbers: Options And Accessories 93
Ordering Numbers: Sine-wave Filter Modules, 200-500 V Ac 95
Ordering Numbers: Sine-wave Filter Modules, 525-600 Vac 96
Output Filters 89
Output Performance (u, V, W) 67
Outputs For Switches 85
Overcurrent Protection 108

P

Parallel Connection Of Motors 122
Pay Back Period 21
Pc Software Tools 124
Peak Voltage On Motor 73
Pid Anti Windup 38
Pid Control Application 36
Pid Diff. Gain Limit 38
Pid Differentiation Time 38
Pid Integral Time 36
Pid Normal/inverse Control 36
Pid Proportional Gain 36
Pid Start Speed [hz] 38
Pid Start Speed [rpm] 38
Plc 130
Potentiometer Reference 134
Power Factor 13
Power Factor Correction 23
Pressure To Temperature 37
Primary Pumps 30
Principle Diagram 85
Profibus 93
Profibus Dp-v1 125
Programmable Minimum Frequency Setting 28

Programming Order 40
Protection 19, 49, 51
Protection And Features 71
Pt1000 Temperature Sensor 85
Pulse Inputs 68
Pulse Start/stop 133
Pulse Width Modulation 74
Pump Characteristics 22
Pump Impeller 29

R

Radiated Emission 47
Rated Motor Speed 9
Rcd 12, 51
Real-time Clock (rtc) 87
Reference Handling 43
Reference/feedback Unit 36
Refrigerant 37
Refrigerant A1 38
Refrigerant A2 38
Refrigerant A3 38
Refrigerant Temperature 45
Relay Connection 119
Relay Option Mcb 105 82
Relay Outputs 69
Removal Of Knockouts For Extra Cables 103
Residual Current Device 51, 131
Return Fan 26
Rise Time 73
Rs-485 145
Rs-485 Bus Connection 123

S

Safe Stop 55
Safe Stop Installation 56
Safety Category 3 (en 954-1) 57
Safety Ground Connection 126
Safety Note 15
Safety Regulations 15
Save Drive Settings 125
Scale The Analog Inputs 40
Secondary Pumps 32
Serial Communication 71, 130
Serial Communication Port 10
Set Speed Limit And Ramp Time 118
Set The Motor Parameters Using Nameplate Data 40
Setpoint 1 37
Setpoint 2 37
Setpoint 3 37
Setpoint Reference 36
Setpoint References 36
Sfavm 74
Shielded/armored 115
Shielding Of Cables 107
Short Circuit (motor Phase – Phase) 54
Short Circuit Protection 108
Side-by-side Installation 102
Sine-wave Filter 107
Sine-wave Filters 89
Single Zone, Single Setpoint 44

Smart Logic Control 135
Smart Logic Control Programming 135
Soft-starter 23
Software Versions 94
Star/delta Starter 23
Start/stop 133
Start/stop Conditions 141
Static Overload In Vvcplus Mode 55
Static Pressure In The Duct 35
Stator Frequency Asyncron Vector Modulation 74
Status Word 173
Stopping Category 0 (en 60204-1) 57
Successful Ama 118
Supply Fan 35
Surroundings 70
Switches S201, S202, And S801 116
Switching Frequency 107
Switching On The Output 54
System Status And Operation 139

T

The Emc Directive (89/336/eec) 17
The Low-voltage Directive (73/23/eec) 17
The Machinery Directive (98/37/eec) 17
Thermistor 13
Throttling Valve 29
Tightening Of Terminals 103
Torque Characteristics 67
Transmitter/sensor Inputs 85
Tune The Pid Controller Parameters 40
Tuning The Drive Closed-loop Controller 41
Type Code String 92

U

Ul Fuses 200-240 V 110
Unsuccessful Ama 118
Usb Connection 113
Use Of Emc-compliant Cables 128

V

Variable Air Volume 26
Variable Control Of Flow And Pressure 22
Varying Flow Over 1 Year 21
Vav 26
Vibration And Shock 20
Vibrations 28
Voltage Level 67
Vvcplus 13

W

Warning Against Unintended Start 15
Warning Word 2, 16-93 181
Warning Word, 16-92 181
What Is Ce Conformity And Labeling? 17
What Is Covered 17

Z

Ziegler Nichols Tuning Method 41

www.danfoss.com/drives

Danfoss shall not be responsible for any errors in catalogs, brochures or other printed material. Danfoss reserves the right to alter its products at any time without notice, provided that alterations to products already on order shall not require material changes in specifications previously agreed upon by Danfoss and the Purchaser.
All trademarks in this material are property of the respective companies. Danfoss and the Danfoss logotype are trademarks of Danfoss A/S. All rights reserved.

Danfoss Drives
4401 N. Bell School Rd.
Loves Park IL 61111 USA
Phone: 1-800-432-6367
1-815-639-8600
Fax: 1-815-639-8000
www.danfossdrives.com

Danfoss Drives
8800 W. Bradley Rd.
Milwaukee, WI 53224 USA
Phone: 1-800-621-8800
1-414-355-8800
Fax: 1-414-355-6117
www.danfossdrives.com

130R0084 MG11B522 Rev. 2007-06-27