User's Manual

ACH550-UH HVAC Drives (1...550 HP)

ABB

ACH550 Drive Manuals

GENERAL MANUALS

ACH550-UH HVAC User's Manual (1…550 HP)

- Safety
- Installation
- Start-Up
- Embedded Fieldbus
- Fieldbus Adapter
- Diagnostics
- Maintenance
- Technical Data

Input Disconnect Configurations (PC or PD) for ACH550 Drives (1…550 HP)

- Safety
- Installation
- Start-Up
- Technical Data

E-Bypass Configurations (BC, BD, VC or VD) for ACH550 Drives (1…400 HP)

- Safety
- Installation
- Start-Up
- Technical Data

OPTION MANUALS

(Fieldbus Adapters, I/O Extension Modules etc., manuals delivered with optional equipment)

Relay Output Extension Module (typical title)

- Installation
- Programming
- Fault tracing
- Technical data

BACnet is a registered trademark of ASHRAE.

CANopen is a registered trademark of CAN in Automation e.V.

ControlNet is a registered trademark of ControlNet International.

DeviceNet is a registered trademark of Open DeviceNet Vendor Association.

DRIVECOM is a registered trademark of DRIVECOM User Organization.

Interbus is a registered trademark of Interbus Club.

LonWorks is a registered trademark of Echelon Corp.

Metasys is a registered trademark of Johnson Controls Inc.

Modbus and Modbus Plus are registered trademarks of Schneider Automation Inc.

Profibus is a registered trademark of Profibus Trade Org.

Profibus-DP is a registered trademark of Siemens AG.

© 2004, 2005 ABB Inc. All Rights Reserved.

Safety

Warning! The ACH550 adjustable speed AC drive should ONLY be installed by a qualified electrician.

Warning! Even when the motor is stopped, dangerous voltage is present at the Power Circuit terminals U1, V1, W1 and U2, V2, W2 and, where present, UDC+, UDC-, BRK+ and BRK-.

Warning! Dangerous voltage is present when input power is connected. After disconnecting the supply, wait at least 5 minutes (to let the intermediate circuit capacitors discharge) before removing the cover.

Warning! Even when power is removed from the input terminals of the ACH550, there may be dangerous voltage (from external sources) on the terminals of the relay outputs R01...R03.

Warning! When the control terminals of two or more drive units are connected in parallel, the auxiliary voltage for these control connections must be taken from a single source which can either be one of the units or an external supply.

Warning! The ACH550 will start up automatically after an input voltage interruption if the external run command is on.

Warning! The heat sink may reach a high temperature. See "Technical Data" on page 253.

Warning! If the drive will be used in a floating network, remove screws at EM1 and EM3 (Frame size R1...R4), or F1 and F2 (Frame size R5 or R6). See diagrams on page 16 and page 17 respectively. Also see "Unsymmetrically Grounded Networks" and "Floating Networks" on page 261.

Warning! Do not attempt to install or remove EM1, EM3, F1 or F2 screws while power is applied to the drive's input terminals.

Note! For more technical information, contact the factory or your local ABB sales representative.

Use of Warnings and Notes

There are two types of safety instructions throughout this manual:

- Notes draw attention to a particular condition or fact, or give information on a subject.
- Warnings caution you about conditions which can result in serious injury or death and/or damage to the equipment. They also tell you how to avoid the danger. The warning symbols are used as follows:

Dangerous voltage warning warns of high voltage which can cause physical injury and/or damage to the equipment.

General warning warns about conditions, other than those caused by electricity, which can result in physical injury and/or damage to the equipment

Table of Contents

Safety

Use of Warnings and Notes 4

Table of Contents

Installation

Installation Flow Chart 7
Preparing for Installation 8
Installing the Drive 11

Start-Up

HVAC Control Panel Features 27
Start-Up 28
Modes 30
Application Macros 43
Parameter Descriptions 59

Embedded Fieldbus

Overview 152
Planning 153
Mechanical and Electrical Installation – EFB 154
Communication Set-up – EFB 155
Activate Drive Control Functions – EFB 157
Feedback from the Drive – EFB 162
Diagnostics – EFB 164
Modbus Protocol Technical Data 166
ABB Control Profiles Technical Data 174
N2 Protocol Technical Data 186
FLN Protocol Technical Data 194
BACnet Technical Data 208
BACnet Object Definitions 211

Fieldbus Adapter

Overview 219
Planning 221
Mechanical and Electrical Installation – FBA 222
Communication Set-up – FBA 223
Activate Drive Control Functions – FBA 223
Feedback from the Drive – FBA 226
Diagnostics – FBA 227
ABB Drives Profile Technical Data 229
Generic Profile Technical Data 237

Diagnostics

Diagnostic Displays 239
Correcting Faults 240
Correcting Alarms 246

Maintenance

Maintenance Intervals 249
Heatsink 249
Main Fan Replacement 250
Internal Enclosure Fan Replacement 251
Capacitors 251
Control Panel 252

Technical Data

Ratings 253
Input Power Connections 257
Motor Connections 265
Control Connections 271
Efficiency 274
Cooling 274
Dimensions and Weights 276
Degrees of Protection 281
Ambient Conditions 282
Materials 283
Applicable Standards 284
Liability Limits 286

Index

Installation

Study these installation instructions carefully before proceeding. **Failure to observe the warnings and instructions may cause a malfunction or personal hazard.**

Warning! Before you begin read "Safety" on page 3.

Installation Flow Chart

The installation of the ACH550 adjustable speed AC drive follows the outline below. The steps must be carried out in the order shown. At the right of each step are references to the detailed information needed for the correct installation of the unit.

Task	See
PREPARE for installation	"Preparing for Installation" on page 8.
PREPARE the Mounting Location	"Prepare the Mounting Location" on page 11.
REMOVE the front cover	"Remove Front Cover" on page 12.
MOUNT the drive	"Mount the Drive" on page 13.
INSTALL wiring	"Wiring Overview" on page 14 and "Install the Wiring" on page 18.
CHECK installation	"Check Installation" on page 22.
RE-INSTALL the cover	"Re-install Cover" on page 22.
APPLY power	"Apply Power" on page 24.
START-UP	"Start-Up" on page 25.

Preparing for Installation

Lifting the Drive

R1…R6

Lift the drive only by the metal chassis.

IP2040

R7…R8

1. Remove the cabinet side panels for access to the cabinet/pallet mounting bolts. See "R7…R8, Side Panels" on page 12.
2. Remove the 4 bolts that secure the cabinet to the shipping pallet.
3. Use a hoist to lift the drive.

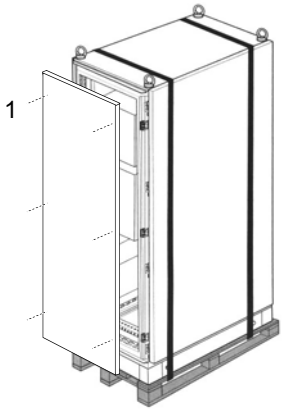

R70010

Unpack the Drive

1. Unpack the drive.
2. Check for any damage and notify the shipper immediately if damaged components are found.
3. Check the contents against the order and the shipping label to verify that all parts have been received.

Drive Identification

Drive Labels

To determine the type of drive you are installing, refer to either:

- Serial number label attached on upper part of the chokeplate between the mounting holes.

ACH550-UH-100A-2

U1	3~ 200...380 V	
I2N	100 A	**Ser. no.*2030700001***
PN	400	

- Type code label attached on the heat sink – on the right side of the unit cover.

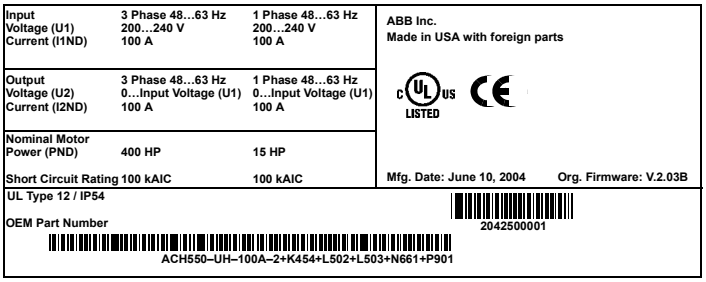

Input Voltage (U1) Current (I1ND)	3 Phase 48…63 Hz 200…240 V 100 A	1 Phase 48…63 Hz 200…240 V 100 A	ABB Inc. Made in USA with foreign parts
Output Voltage (U2) Current (I2ND)	3 Phase 48…63 Hz 0…Input Voltage (U1) 100 A	1 Phase 48…63 Hz 0…Input Voltage (U1) 100 A	c UL us LISTED CE
Nominal Motor Power (PND)	400 HP	15 HP	
Short Circuit Rating	100 kAIC	100 kAIC	Mfg. Date: June 10, 2004 Org. Firmware: V.2.03B

UL Type 12 / IP54

OEM Part Number 2042500001

ACH550–UH–100A–2+K454+L502+L503+N661+P901

Type Code

Use the following chart to interpret the type code found on either label.

ACH550-UH-08A8-4+...

AC, HVAC Drive – 550 product series

Construction (region specific)
01 = Setup and parts specific to IEC installation and compliance
UH = Setup and parts specific to US installation and NEMA compliance

Output current rating
See Ratings chart for details

Voltage rating
2 = 208…240 VAC
4 = 380…480 VAC
6 = 500…600 VAC

Enclosure protection class
No specification = IP 21 / UL type 1
B055 = IP 54 / UL type 12

Fieldbus Adapters
+K451 = DeviceNet Adapter
+K452 = LonWorks Adapter
+K454 = Profibus Adapter

Ratings and Frame Size

The chart in "Ratings" on page 253 lists technical specifications, and identifies the drive's frame size – significant, since some instructions in this document, vary, depending on the drive's frame size. To read the Ratings table, you need the "Output current rating" entry from the type code (see above). Also, when using the Ratings tables, note that there are two tables based on the drive's "Voltage rating".

Motor Compatibility

The motor, drive, and supply power must be compatible:

Motor Specification	Verify	Reference
Motor type	3-phase induction motor	–
Nominal current	Motor value is within this range: 0.15…1.5 * I_{2N} (I_{2N} = normal use current)	• Type code label on drive, entry for Output I_{2N}, or • Type code on drive and rating table in "Technical Data" on page 253.
Nominal frequency	10…500 Hz	–
Voltage range	Motor is compatible with the ACH550 voltage range.	208…240 V (for ACH550-xx-xxxx-2) or 380…480 V (for ACH550-xx-xxxx-4) 500…600 V (for ACH550-xx-xxxx-6)
Insulation	500…600 V drives: Either the motor complies with NEMA MG1 Part 31, or a du/dt filter is used between the motor and drive.	For ACH550-xx-xxxx-6

Tools Required

To install the ACH550 you need the following:

- Screwdrivers (as appropriate for the mounting hardware used)
- Wire stripper
- Tape measure
- Drill
- Frame Size R5…R8 with IP 54 / UL type 12 enclosure: Punch for conduit mounting holes
- For installations involving frame size R6…R8: The appropriate crimping tool for power cable lugs. See "Power Terminal Considerations – R6 Frame Size".
- Mounting hardware: screws or nuts and bolts, four each. The type of hardware depends on the mounting surface and the frame size:

Frame Size	Mounting Hardware		Note
R1…R4	M5	#10	
R5	M6	1/4 in	
R6	M8	5/16 in	
R7…R8	M10	7/16	Secures free standing cabinets if required.

- For installations involving frame size R7…R8: Hoist.

Suitable Environment and Enclosure

Confirm that the site meets the environmental requirements. To prevent damage prior to installation, store and transport the drive according to the environmental requirements specified for storage and transportation. See "Ambient Conditions" on page 282.

Confirm that the enclosure is appropriate, based on the site contamination level:

- IP 21 / UL type 1 enclosure. The site must be free of airborne dust, corrosive gases or liquids, and conductive contaminants such as condensation, carbon dust, and metallic particles.
- IP 54 / UL type 12 enclosure. This enclosure provides protection from airborne dust and light sprays or splashing water from all directions.

Suitable Mounting Location

Confirm that the mounting location meets the following constraints:

- R1…R6: The drive must be mounted vertically on a smooth, solid surface, and in a suitable environment as defined above.
- The drive must be located in a suitable environment as defined above.
- The minimum space requirements for the drive are the outside dimensions (see "Outside Dimensions – R1…R6" on page 279), plus air flow space around the unit (see "Cooling" on page 274).

- The distance between the motor and the drive is limited by the maximum motor cable length. See either "Motor Connection Specifications" on page 265, or "EN 61800-3 Compliant Motor Cables" on page 268.
- The mounting site must support the drive's weight. See "Weight" on page 278.

Installing the Drive

Warning! Before installing the ACH550, ensure the input power supply to the drive is off.

Prepare the Mounting Location

The ACH550 should only be mounted where all of the requirements defined in "Preparing for Installation" on page 8 are met.

1. Mark the position of the mounting holes.
2. Drill holes of appropriate size.

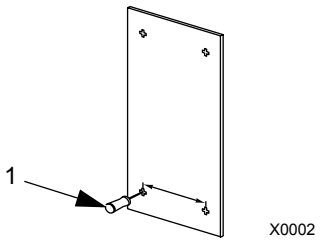

Note! Frame sizes R3 and R4 have four holes along the top. Use only two. If possible, use the two outside holes (to allow room to remove the fan for maintenance).

Note! ACH400 drives can be replaced using the original mounting holes. For R1 and R2 frame sizes, the mounting holes are identical. For R3 and R4 frame sizes, the inside mounting holes on the top of ACH550 drives match ACH400 mounts.

Note! Frame sizes R7 and R8 are free standing cabinets. However, local codes (e.g. in seismic regions) may require that the cabinet be bolted in place. The cabinet base has mounting holes for such situations.

Remove Front Cover

R1…R6, *IP 21 / UL Type 1*

1. Remove the control panel, if attached.
2. Loosen the captive screw at the top.
3. Pull near the top to remove the cover.

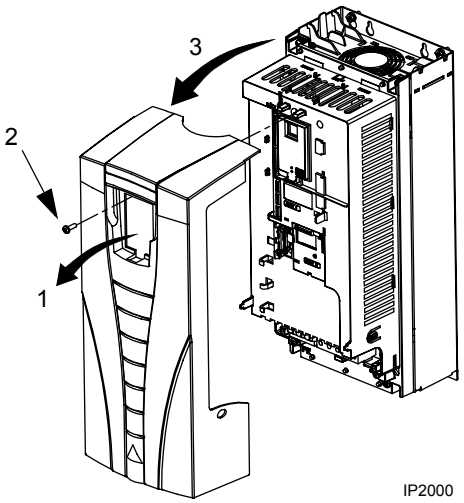

R1…R6, *IP 54 / UL Type 12*

1. If hood is present: Remove screws (2) holding the hood in place.
2. If hood is present: Slide hood up and off of the cover.
3. Loosen the captive screws around the edge of the cover.
4. Remove the cover.

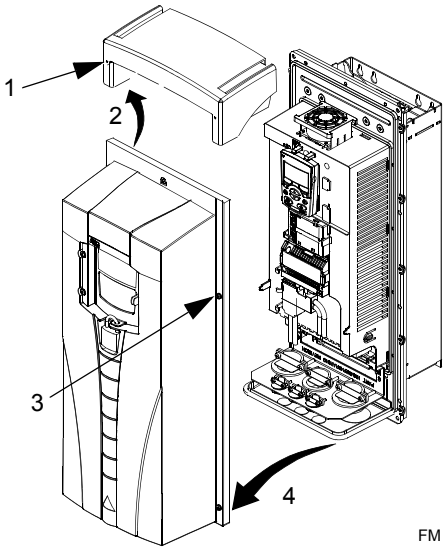

R7…R8, Cabinet Door

1. To open the cabinet door, loosen the quarter-turn screws that hold the cabinet door closed.

R7…R8, Side Panels

Removing the cabinet side panels is not required, but removal simplifies access for installation procedures.

1. Remove the 6 torx screws that hold each cabinet side panel in place.
2. Remove the side panels.

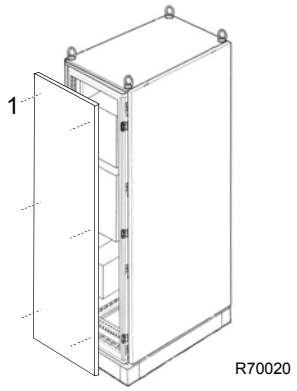

Note! If the cabinet location does not provide access to the cabinet sides, be sure to re-mount side panels before positioning cabinet.

Mount the Drive

R1…R6, *IP 21 / UL Type 1*

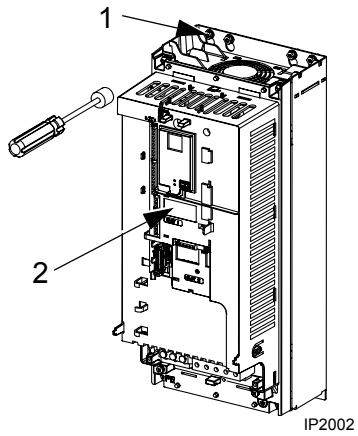

1. Position the ACH550 onto the mounting screws or bolts and securely tighten in all four corners.

   Note! Lift the ACH550 by its metal chassis.

2. Non-English speaking locations: Add a warning sticker in the appropriate language over the existing warning on the top of the module.

R1…R6, *IP 54 / UL Type 12*

For the IP54 / UL Type 12 enclosures, rubber plugs are required in the holes provided for access to the drive mounting slots.

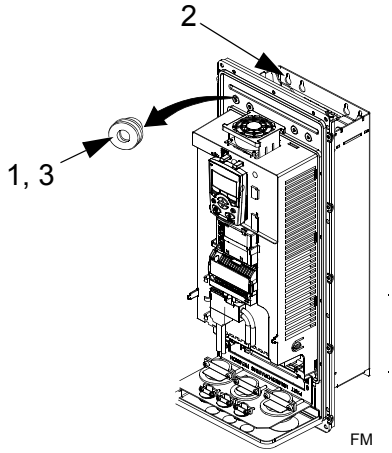

1. As required for access, remove the rubber plugs. Push plugs out from the back of the drive.
2. R5 & R6: Align the sheet metal hood (not shown) in front of the drive's top mounting holes. (Attach as part of next step.)
3. Position the ACH550 onto the mounting screws or bolts and securely tighten in all four corners.

   Note! Lift the ACH550 by its metal chassis.

4. Re-install the rubber plugs.
5. Non-English speaking locations: Add a warning sticker in the appropriate language over the existing warning on the top of the module.

R7…R8, Side Panels

If the cabinet is to be bolted into place:

1. Drill appropriate mounting holes in the floor.
2. Use a hoist to move the cabinet into position.

   Note! If the cabinet location does not provide access to the cabinet sides, be sure to re-mount side panels before positioning cabinet.

3. Install and tighten mounting bolts.

Wiring Overview

Conduit Kit

Wiring R1…R6 drives with the IP 21 / UL type 1 Enclosure requires a conduit kit with the following items:

- conduit box
- screws
- cover

The kit is included with IP 21 / UL type 1 Enclosures.

Wiring Requirements

Warning! Ensure the motor is compatible for use with the ACH550. The ACH550 must be installed by a competent person in accordance with the considerations defined in "Preparing for Installation" on page 8. If in doubt, contact your local ABB sales or service office.

As you install the wiring, observe the following:

- There are two sets of wiring instructions – one set for each enclosure type (IP 21 / UL type and IP 54 / UL type 12). Be sure to select the appropriate procedure.
- For the power connection points on the drive see the "Connection Diagrams" section below.
- Use separate, metal conduit runs to keep these three classes of wiring apart:
  - Input power wiring.
  - Motor wiring.
  - Control/communications wiring.
- When installing input power and motor wiring, refer to the following, as appropriate:

Terminal	Description	Specifications and Notes
U1, V1, W1*	3-phase power supply input	"Input Power Connections" on page 257.
PE	Protective Ground	"Ground Connections" on page 261.
U2, V2, W2	Power output to motor	"Motor Connections" on page 265.

* The ACH550 -xx-xxxx-2 (208…240V series) can be used with a single phase supply, if output current is derated by 50%. For single phase supply voltage connect power at U1 and W1.

- To locate input power and motor connection terminals, see "Connection Diagrams" starting on page 16. For specifications on power terminals, see "Drive's Power Connection Terminals" on page 263.
- For frame sizes R1…R4 in unsymmetrically grounded networks, see "Unsymmetrically Grounded Networks" on page 261.
- For floating (or impedance grounded) networks, see "Floating Networks" on page 262.

- For frame size R6, see "Power Terminal Considerations – R6 Frame Size" on page 263 to install the appropriate cable lugs.
- For details on control connections, refer to the following sections:
  - "Control Connections" on page 271.
  - "Application Macros" starting on page 43.
  - "Parameter Descriptions" on page 59.
  - "Embedded Fieldbus" on page 152.
  - "Fieldbus Adapter" on page 219.
- For electro-magnetic compliance (EMC), follow local codes and the requirements in "Motor Cable Requirements for CE & C-Tick Compliance" on page 267. For example:
  - Properly ground the wire screen cable shields.
  - Keep individual un-screened wires between the cable clamps and the screw terminals as short as possible.
  - Route control cables away from power cables.

Connection Diagrams

The following diagrams show:

- The terminal layout for frame size R3, which, in general, applies to frame sizes R1...R6, except for the R5/R6 power and ground terminals.
- The R5/R6 power and ground terminals.
- The terminal layout for R7/R8.

R1…R4 (Diagram shows the R3 frame.)

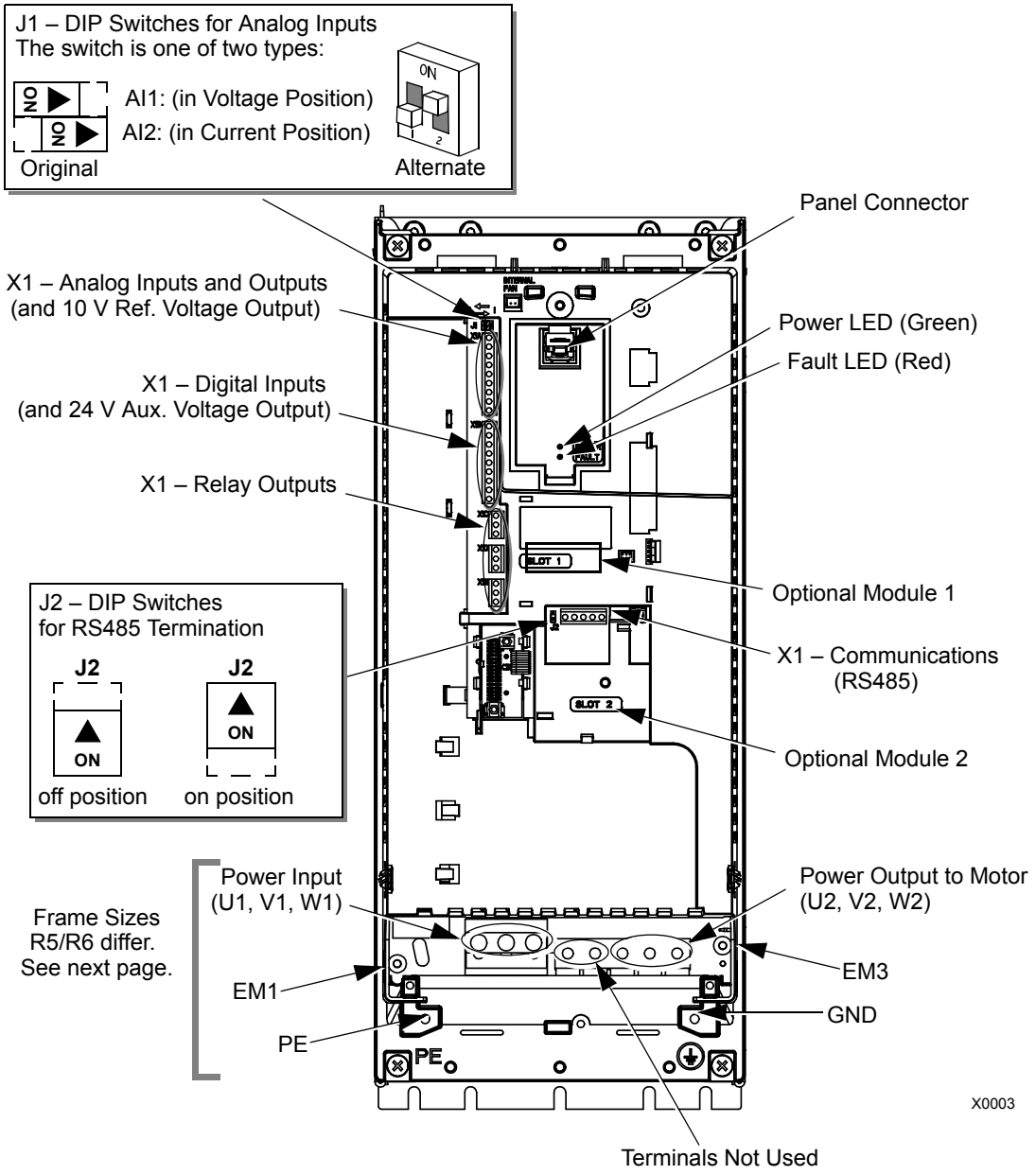

Warning! For floating, impedance grounded, or unsymmetrically grounded networks, disconnect the internal RFI filter by removing: screw EM1 (drive is shipped with EM3 already removed). See "Floating Networks" on page 262.

The following diagram shows the power and ground terminal layout for frame sizes R5 and R6

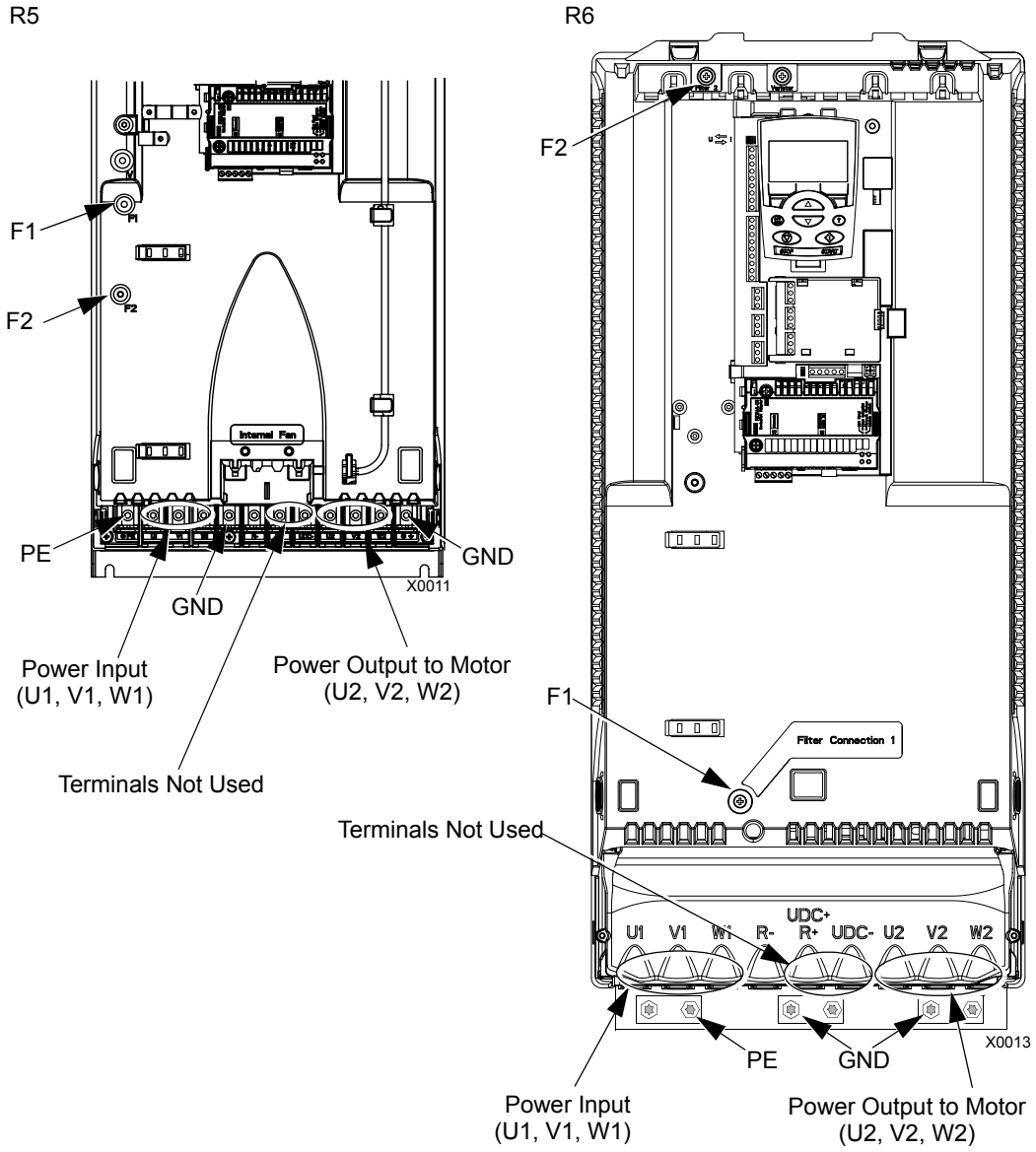

Warning! For floating, impedance grounded, or unsymmetrically grounded networks, disconnect the internal RFI filter by removing screws: F1 and F2. See "Floating Networks" on page 262.

The following diagram shows the power and ground terminal layout for frame size R7 (R8 is similar).

R7

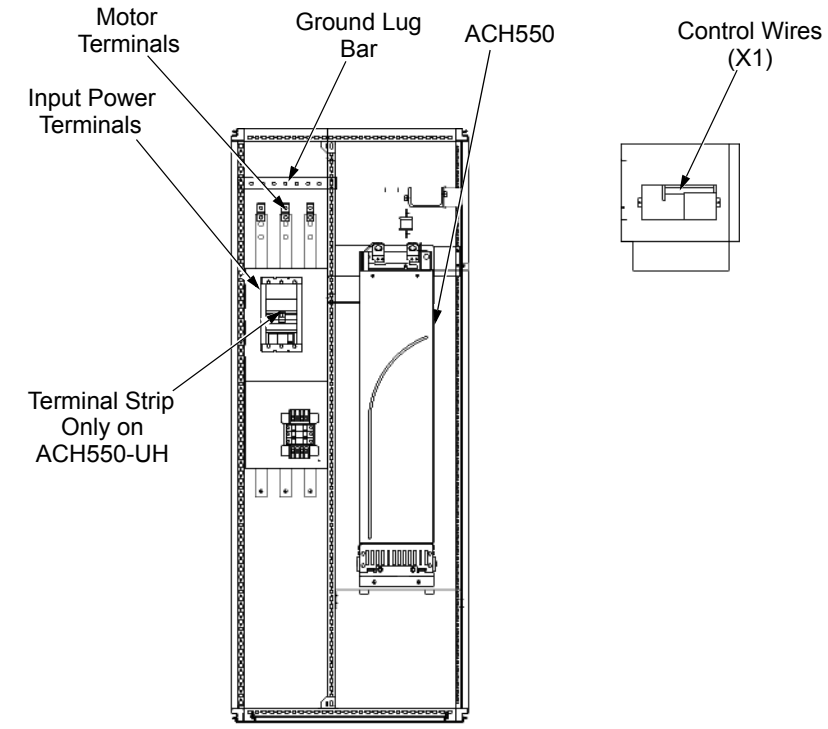

Install the Wiring

Checking Motor and Motor Cable Insulation

Warning! Check the motor and motor cable insulation before connecting the drive to input power. For this test, make sure that motor cables are NOT connected to the drive.

1. Complete motor cable connections to the motor, but NOT to the drive output terminals (U2, V2, W2).
2. At the drive end of the motor cable, measure the insulation resistance between each motor cable phase and Protective Earth (PE): Apply a voltage of 1 kV DC and verify that resistance is greater than 1 Mohm.

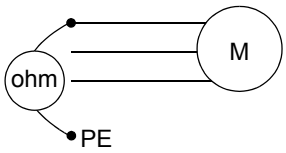

R1…R6, Wiring IP 21 / UL Type 1 Enclosure

1. Open the appropriate knockouts in the conduit box. (See "Conduit Kit" above.)
2. Install thin-wall conduit clamps (not supplied).

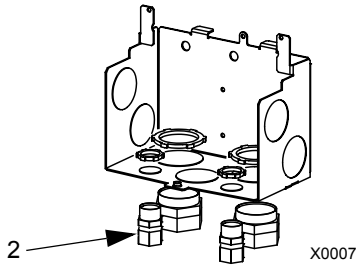

3. Install conduit box.
4. Connect conduit runs for input power, motor and control cables to the box.

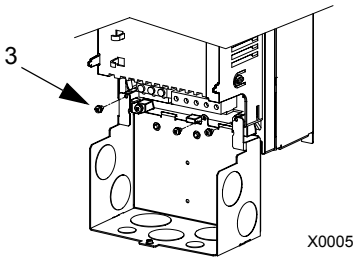

5. Route input power and motor wiring through separate conduits.
6. Strip wires.
7. Connect power, motor, and ground wires to the drive terminals. See "Wiring Requirements" on page 14.

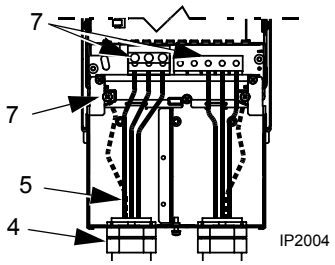

Note! For R5 frame size, the minimum power cable size is 25 mm^2 (4 AWG). For R6 frame size, refer to "Power Terminal Considerations – R6 Frame Size" on page 263.

---

8. Route the control cables through the conduit (not the same conduit as either input power or motor wiring).
9. Strip the control cable sheathing and twist the copper screen into a pig-tail.
10. Connect the ground screen pig-tail for digital and analog I/O cables at X1-1. (Ground only at drive end.)
11. Connect the ground screen pig-tail for RS485 cables at X1-28 or X1-32. (Ground only at drive end.)
12. Strip and connect the individual control wires to the drive terminals. See "Wiring Requirements" on page 14.
13. Install the conduit box cover (1 screw).

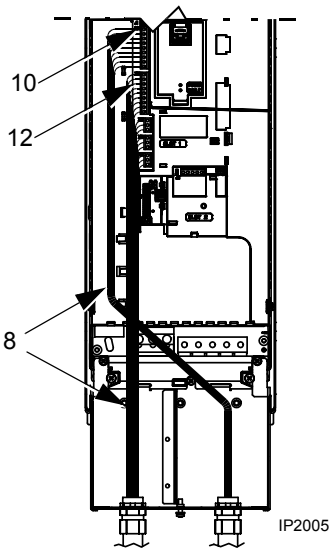

R1…R6, Wiring IP 54 / UL Type 12 Enclosure

1. Step depends on Frame Size:
   - Frame Sizes R1…R4: Remove and discard the cable seals where conduit will be installed. (The cable seals are cone-shaped, rubber seals on the bottom of the drive.)
   - Frame Sizes R4 and R5: Use punch to create holes for conduit connections as needed.

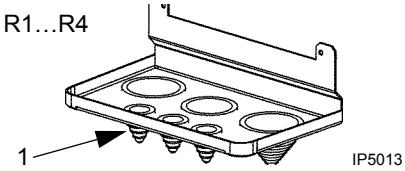

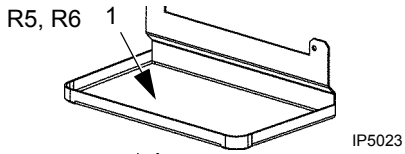

2. For each conduit run (input power, motor and control wiring must be separate), install water tight conduit connectors (not supplied).

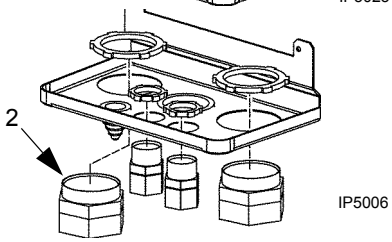

3. Route the power wiring through conduit.
4. Route the motor wiring through conduit (not the same conduit as input power wiring run).
5. Strip the wires.
6. Connect the power, motor, and ground wires to the drive terminals. See "Wiring Requirements" on page 14, and "Connection Diagrams" on page 16.

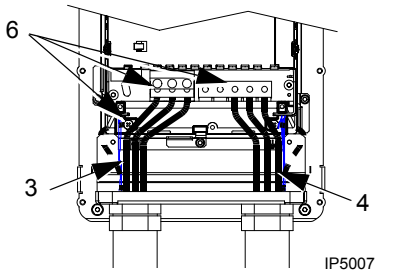

Note! For R5 frame size, the minimum power cable size is 25 mm^2 (4 AWG). For R6 frame size, refer to "Power Terminal Considerations – R6 Frame Size" on page 263.

---

7. Route the control cables through the conduit (not the same conduit as either input power or motor wiring runs).
8. Strip the control cable sheathing and twist the copper screen into a pig-tail.
9. Connect the ground screen pig-tail for digital and analog I/O cables at X1-1. (Ground only at drive end.)
10. Connect the ground screen pig-tail for RS485 cables at X1-28 or X1-32. (Ground only at drive end.)
11. Strip and connect the individual control wires to the drive terminals. See "Wiring Requirements" on page 14.
12. Install the conduit box cover (1 screw).

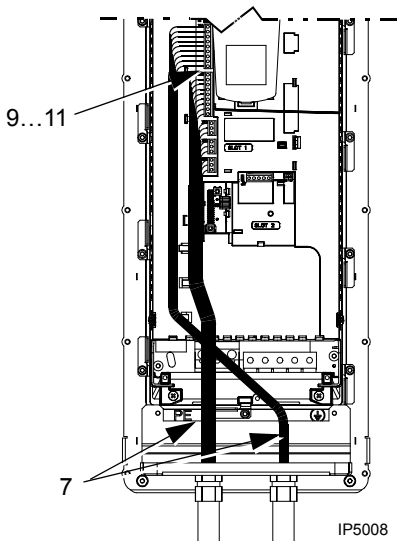

R7…R8, Wiring (Both Enclosure Types)

The figures show connections in the R7 cabinet, the R8 cabinet is similar.

1. Remove the conduit connection plate from the top of the left bay.
2. Route the input power, motor and control cables to the top of the cabinet. Each cable type (input power, motor, and control) must be in separate conduit.
3. Use punch to create holes for conduit connections as needed.
4. IP 54 / UL Type 12 Enclosure: For each conduit run (input power, motor and control wiring must be separate), install water tight conduit connectors (not supplied).
5. Connect input power and motor cables to the bus terminals. See "Wiring Requirements" on page 14, and "Connection Diagrams" on page 16.

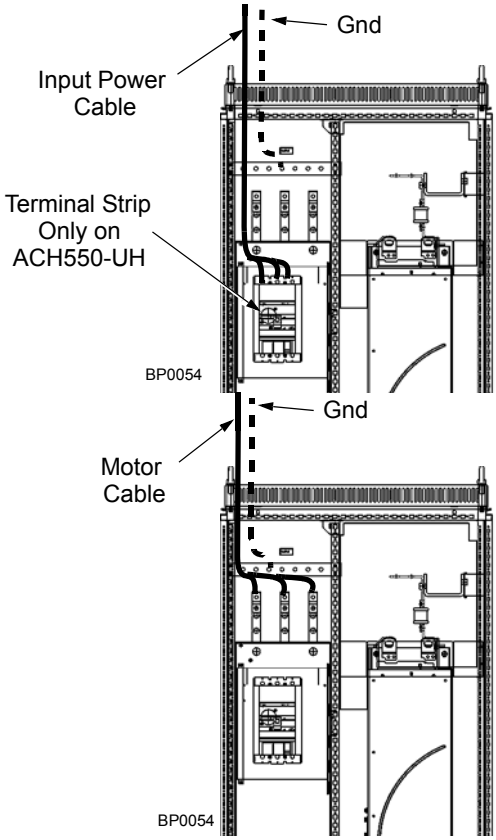

6. Connect grounds to ground bar.
7. Strip the control cable sheathing and twist the copper screen into a pig-tail.
8. Connect the ground screen pig-tail for digital and analog I/O cables at X1-1. (Ground only at drive end.)
9. Connect the ground screen pig-tail for RS485 cables at X1-28 or X1-32. (Ground only at drive end.)
10. Strip and connect the individual control wires to the drive terminals. See "Wiring Requirements" on page 14.

Check Installation

Before applying power, perform the following checks.

✓	Check
	Installation environment conforms to the drive's specifications for ambient conditions.
	The drive is mounted securely.
	Space around the drive meets the drive's specifications for cooling.
	The motor and driven equipment are ready for start.
	For floating networks (R1…R6): The internal RFI filter is disconnected (screws EM1 & EM3 or F1 & F2).
	The drive is properly grounded.
	The input power voltage matches the drive nominal input voltage range.
	The input power connections at U1, V1, and W1 are connected and tightened as specified.
	The input power branch circuit protection is installed.
	The motor connections at U2, V2, and W2 are connected and tightened as specified.
	The input power, motor and control wiring are routed through separate conduit runs.
	NO power factor compensation capacitors are in the motor cable.
	The control connections are connected and tightened as specified.
	NO tools or foreign objects (such as drill shavings) are inside the drive.
	NO alternate power source for the motor (such as a bypass connection) is connected – no voltage is applied to the output of the drive.

Re-install Cover

R1…R6, IP 21 / UL Type 1

1. Align the cover and slide it on.
2. Tighten the captive screw.
3. Re-install the control panel.

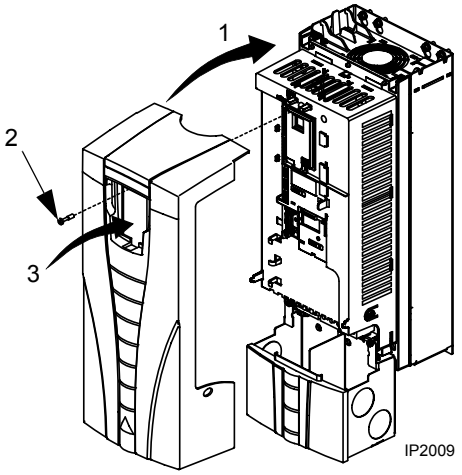

R1…R6, IP 54 / UL Type 12

1. Align the cover and slide it on.
2. Tighten the captive screws around the edge of the cover.
3. R1…R4: Slide the hood down over the top of the cover.
4. R1…R4: Install the two screws that attach the hood.
5. Re-install the control panel.

Note! The control panel window must be closed to comply with IP 54/UL type 12.

---

6. Optional: Add a lock (not supplied) to secure the control panel window.

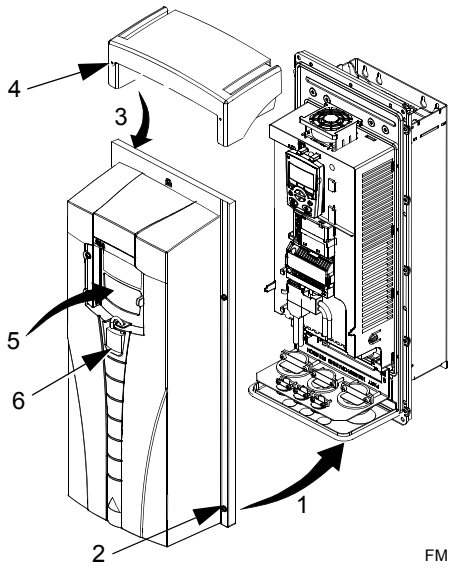

R7…R8, Covers

1. If side panels were removed and not remounted, mount them now. Each panel requires 6 torx screws.
2. Re-mount all high voltage shields.
3. Close all internal swing-out panels and secure in place with the quarter-turn screws.
4. Close the cabinet door and secure in place with the quarter-turn screws.

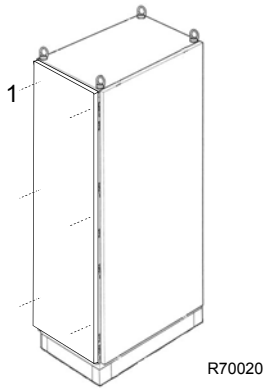

Apply Power

Always re-install the covers before turning power on.

Warning! The ACH550 will start up automatically at power up, if the external run command is on.

1. Apply input power.

   When power is applied to the ACH550, the green LED comes on.

Note! Before increasing motor speed, check that the motor is running in the desired direction.To change rotation direction, switch motor leads as shown below.

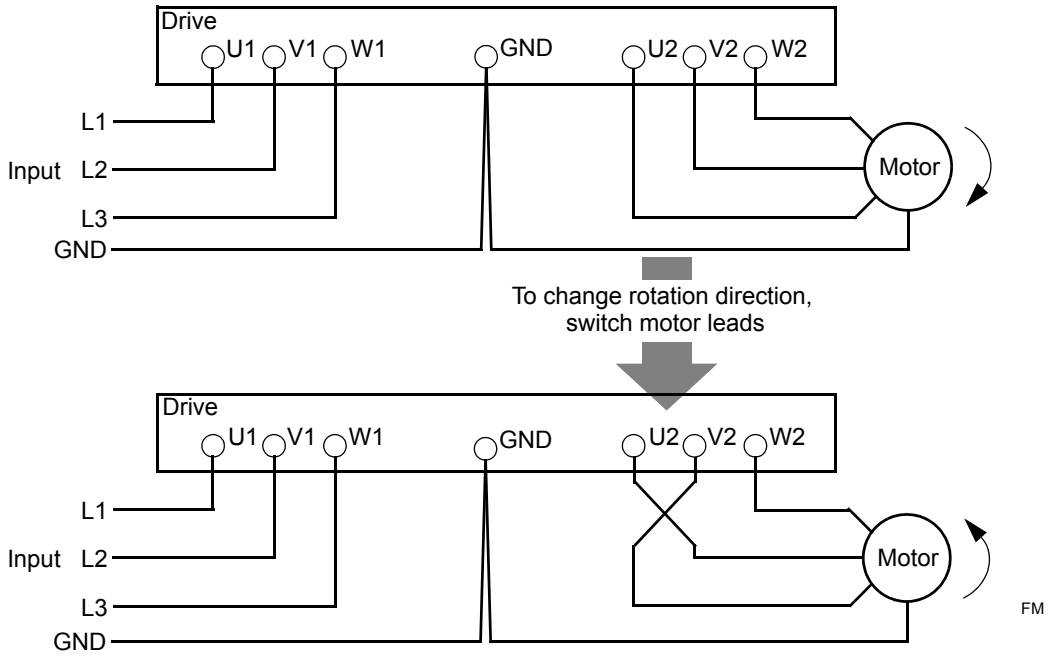

Start-Up

The ACH550 has default parameter settings that are sufficient for many situations. However, review the following situations. Perform the associated procedures as appropriate.

Spin Motor

When first installed and started the control panel displays a welcome screen with the following options.

- Press Exit to commission the drive as described in section "Start-Up by Changing the Parameters Individually" on page 28.
- Press Enter to move to the following options:
  - Select "Commission Drive" to commission the drive as described in section "Start-Up by Using the Start-Up Assistant" on page 28.
  - Select "Spin Motor" to operate the motor prior to commissioning. This option operates the motor without any commissioning, except entry of the motor data as described below. Spin Motor is useful, for example, to operate ventilation fans prior to commissioning.

Note! When using Spin Motor, the motor speed is limited to the range 1/3…2/3 of maximum speed. Also, no interlocks are activated. Finally, once the drive is commissioned, the welcome screen and this option no longer appear.

Motor Data

The motor data on the ratings plate may differ from the defaults in the ACH550. The drive provides more precise control and better thermal protection if you enter the rating plate data.

1. Gather the following from the motor ratings plate:
   - Voltage
   - Nominal motor current
   - Nominal frequency
   - Nominal speed
   - Nominal power
2. Edit parameters 9905…9909 to the correct values.
   - Assistant Control Panel: The Start-up Assistant walks you through this data entry (see page 33).
   - Basic Control Panel: Refer to "Parameters Mode" on page 31, for parameter editing instructions.

Macros

Note! Selecting the appropriate macro should be part of the original system design, since the control wiring installed depends on the macro used.

---

1. Review the macro descriptions in "Application Macros" on page 43. Use the macro that best fits system needs.
2. Edit parameter 9902 to select the appropriate macro. Use either of the following:
   - Use the Start-up Assistant, which displays the macro selection immediately after motor parameter setup.
   - Refer to "Parameters Mode" on page 31, for parameter editing instructions.

Tuning – Parameters

The system can benefit from one or more of the ACH550 special features, and/or fine tuning.

1. Review the parameter descriptions in "Parameter Descriptions" starting on page 59. Enable options and fine tune parameter values as appropriate for the system.
2. Edit parameters as appropriate.

Fault and Alarm Adjustments

The ACH550 can detect a wide variety of potential system problems. For example, initial system operation may generate faults or alarms that indicate set-up problems.

1. Faults and alarms are reported on the control panel with a number. Note the number reported.
2. Review the description provided for the reported fault/alarm:
   - Use the fault and alarm listings on pages 240 and 246 respectively, or
   - Press the help key (Assistant Control Panel only) while fault or alarm is displayed.
3. Adjust the system or parameters as appropriate.

Start-Up

HVAC Control Panel Features

The ACH550 HVAC control panel (ACS-CP-B) features:

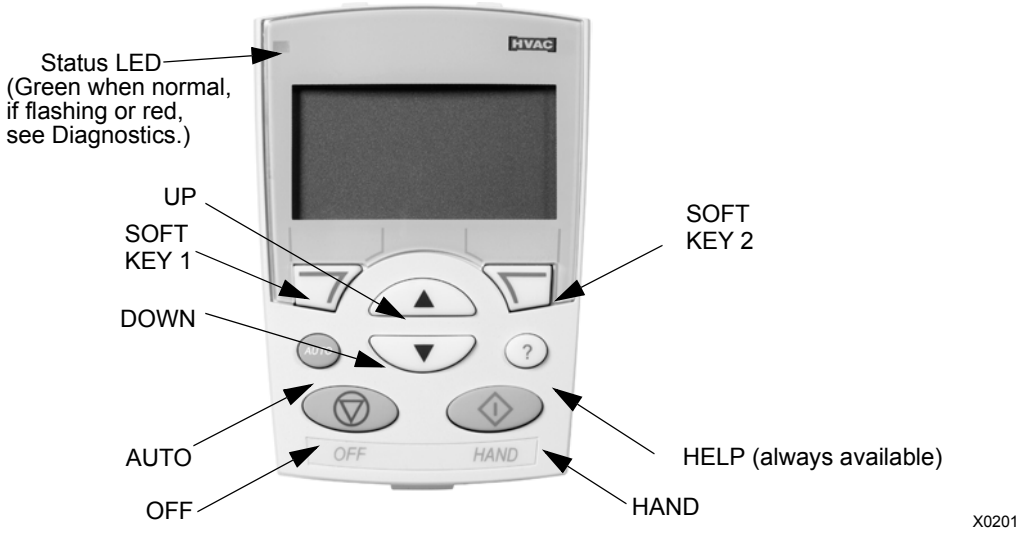

- Language selection for the display
- Drive connection that can be made or detached at any time
- Start-up assistant to facilitate drive commissioning
- Copy function for moving parameters to other ACH550 drives
- Backup function for saving parameter sets
- Context sensitive help
- Real-time clock

General Display Features

Soft Key Functions

The soft key functions are defined by text displayed just above each key.

Display Contrast

To adjust display contrast, simultaneously press and or , as appropriate.

Start-Up

Start-Up can be performed in two ways:

- Using the Start-Up Assistant.
- Changing the parameters individually.

Start-Up by Using the Start-Up Assistant

To start the Start-Up Assistant, follow these steps:

1	Select MENU to enter the main menu		OFF ↻ 0.0Hz 0.0 % 0.0 A 0.0 mA 00:00 MENU
2	Select ASSISTANTS with the Up/Down buttons and select ENTER.		OFF ↻MAIN MENU——2 PARAMETERS ASSISTANTS CHANGED PAR EXIT 00:00 ENTER
3	Scroll to COMMISSION DRIVE with the Up/Down buttons.		OFF ↻ASSISTANTS——1 Spin the motor Commission drive Application Option modules References 1 & 2 EXIT SEL
4	Change the values suggested by the assistant to your preferences and then press SAVE after every change.		OFF ↻PAR EDIT—— 9901 LANGUAGE ENGLISH [0] EXIT SAVE

The Start-Up Assistant will guide you through the start-up.

Start-Up by Changing the Parameters Individually

To change the parameters, follow these steps:

1	Select MENU to enter the main menu.		OFF ↻ 0.0Hz 0.0 % 0.0 A 0.0 mA 00:00 MENU
2	Select the Parameters mode with the UP/DOWN buttons and select ENTER to select the Parameters mode.		OFF ↻MAIN MENU——1 PARAMETERS ASSISTANTS CHANGED PAR EXIT 00:00 ENTER
3	Select the appropriate parameter group with the UP/DOWN buttons and select SEL		OFF ↻PAR GROUPS——99 99 START-UP DATA 01 OPERATING DATA 03 ACTUAL SIGNALS 04 FAULT HISTORY 10 START/STOP/DIR EXIT 00:00 SEL

4	Select the appropriate parameter in a group with the UP/DOWN buttons.Select EDIT to change the parameter value.		OFF ↻PARAMETERS 9901 LANGUAGE 9902 APPLIC MACRO HVAC DEFAULT 9904 MOTOR CTRL MODE 9905 MOTOR NOM VOLT EXIT EDIT
5	Press the UP/DOWN buttons to change the parameter value.		OFF ↻PAR EDIT 9902 APPLIC MACRO HVAC DEFAULT [1] CANCEL 00:00 SAVE
6	Select SAVE to store the modified value or select CANCEL to leave the set mode. Any modifications not saved are cancelled.		OFF ↻PAR EDIT 9902 APPLIC MACRO SUPPLY FAN [2] CANCEL SAVE
7	Select EXIT to return to the listing of parameter groups, and again to return to the main menu.		OFF ↻PARAMETERS 9901 LANGUAGE 9902 APPLIC MACRO SUPPLY FAN 9904 MOTOR CTRL MODE 9905 MOTOR NOM VOLT EXIT EDIT

To complete the control connections by manually entering the parameters, see "Parameters Mode" in this section.

For detailed hardware description, see the **"Technical Data"** section.

Note! The current parameter value appears below the highlighted parameter.

Note! To view the default parameter value, press the UP/DOWN buttons simultaneously.

Note! The most typical and necessary parameters to change are parameter groups 99 Start-up data, 10 Start/Stop/Dir, 11 Reference Select, 20 Limits, 21 Start/Stop, 22 Accel/Decel, 26 Motor Control and 30 Fault Functions.

Note! To restore the default factory settings, select the application macro HVAC default.

Modes

The HVAC control panel has several different modes for configuring, operating and diagnosing the drive. The modes are:

- **Standard display mode –** Shows drive status information and operates the drive.
- **Parameters mode –** Edits parameter values individually.
- **Start-up assistant mode –** Guides the start-up and configuration.
- **Changed parameters mode –** Shows changed parameters.
- **Fault logger mode** – Shows the drive fault history.
- **Drive parameter backup mode –** Stores or uploads the parameters.
- **Clock set mode –** Sets the time and date for the drive.
- **I/O settings mode –** Checks and edits the I/O settings.
- **Alarm mode** – Reporting mode triggered by drive alarms.

Standard Display Mode

Use the standard display mode to read information on the drive's status and to operate the drive. To reach the standard display mode, press EXIT until the LCD display shows status information as described below.

Status Information

Top. The top line of the LCD display shows the basic status information of the drive.

- HAND **–** Indicates that the drive control is local, that is, from the control panel.
- AUTO **–** Indicates that the drive control is remote, such as the basic I/O (X1) or fieldbus.
- ↻ **–** Indicates the drive and motor rotation status as follows:

Control panel display	Significance
Rotating arrow (clockwise or counterclockwise)	• Drive is running and at setpoint • Shaft direction is forward or reverse
Rotating dotted arrow blinking	Drive is running but not at setpoint
Stationary dotted arrow	Start command is present, but motor is not running. E.g. start enable is missing.

- Upper right **–** shows the active reference.

Middle. Using parameter group 34, the middle of the LCD display can be configured to display:

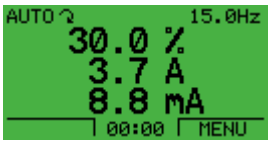

- One to three parameter values **–** The default display shows parameters 0103 (OUTPUT FREQ) in percentages, 0104 (CURRENT) in amperes and 0120 (AI1) in milliamperes.
  - Use parameters 3401, 3408, and 3415 to select the parameters (from Group 01) to display. Entering "parameter" 0100 results in no parameter displayed. For example, if 3401 = 0100 and 3415 = 0100, then only the parameter

specified by 3408 appears in the Control Panel display.

– You can also scale each parameter in the display, for example, to convert the motor speed to a display of conveyor speed. Parameters 3402…3405 scale the parameter specified by 3401, parameters 3409…3412 scale the parameter specified by 3408, etc.

- A bar meter rather than one of the parameter values.

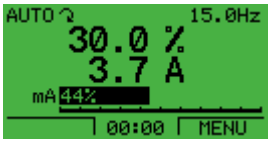

  – Enable bar graph displays using parameters 3404, 3411 and 3418.

Bottom. The bottom of the LCD display shows:

- Lower corners **–** show the functions currently assigned to the two soft keys.
- Lower middle **–** displays the current time (if configured to show the time).

Operating the Drive

AUTO/HAND – The very first time the drive is powered up, it is in the auto control (AUTO) mode, and is controlled from the Control terminal block X1.

To switch to hand control (HAND) and control the drive using the control panel, press and hold the or button.

- Pressing the HAND button switches the drive to hand control while keeping the drive running.
- Pressing the OFF button switches to hand control and stops the drive.

To switch back to auto control (AUTO), press and hold the button.

Hand/Auto/Off – To start the drive press the HAND or AUTO buttons, to stop the drive press the OFF button.

Reference – To modify the reference (only possible if the display in the upper right corner is in reverse video) press the UP or DOWN buttons (the reference changes immediately).

The reference can be modified in the local control mode, and can be parameterized (using Group 11 reference select) to also allow modification in the remote control mode.

Note! The Start/Stop, Shaft direction and Reference functions are only valid in local control (LOC) mode.

Parameters Mode

To change the parameters, follow these steps:

1	Select MENU to enter the main menu.		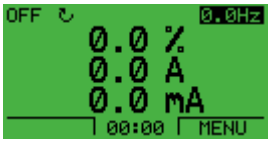

2	Select the Parameters mode with the UP/DOWN buttons, and select ENTER to select the Parameters mode.		OFF MAIN MENU 1 PARAMETERS ASSISTANTS CHANGED PAR EXIT 00:00 ENTER
3	Select the appropriate parameter group with the UP/DOWN buttons and select SEL		OFF PAR GROUPS 99 99 START-UP DATA 01 OPERATING DATA 03 ACTUAL SIGNALS 04 FAULT HISTORY 10 START/STOP/DIR EXIT 00:00 SEL
4	Select the appropriate parameter in a group with the UP/DOWN buttons. Select EDIT to change the parameter.		OFF PARAMETERS 9901 LANGUAGE 9902 APPLIC MACRO HVAC DEFAULT 9904 MOTOR CTRL MODE 9905 MOTOR NOM VOLT EXIT EDIT
5	Press the UP/DOWN buttons to change the parameter value.		OFF PAR EDIT 9902 APPLIC MACRO HVAC DEFAULT [1] CANCEL 00:00 SAVE
6	Select SAVE to store the modified value or select CANCEL to leave the set mode. • Any modifications not saved are cancelled. • Each individual parameter setting is valid immediately after pressing SAVE.		OFF PAR EDIT 9902 APPLIC MACRO SUPPLY FAN [2] CANCEL SAVE
7	Select EXIT to return to the listing of parameter groups, and again to return to the main menu.		OFF PARAMETERS 9901 LANGUAGE 9902 APPLIC MACRO SUPPLY FAN 9904 MOTOR CTRL MODE 9905 MOTOR NOM VOLT EXIT EDIT

To complete the control connections by manually entering the parameters, see "Parameters Mode" in the this section.

For detailed hardware description, see the Appendix.

Note! The current parameter value appears below the highlighted parameter.

Note! To view the default parameter value, press the UP/DOWN buttons simultaneously.

Note! The most typical and necessary parameters to change are parameter groups 99 Start-up data, 10 Start/Stop/Dir, 11 Reference Select, 20 Limits, 21 Start/Stop, 22 Accel/Decel, 26 Motor Control and 30 Fault Functions.

Note! To restore the default factory settings, select the application macro HVAC default.

Start-Up Assistant Mode

To start the Start-Up Assistant, follow these steps:

1	Select MENU to enter the main menu		OFF ↻ 0.0Hz 0.0 % 0.0 A 0.0 mA 00:00 MENU
2	Select ASSISTANTS with the Up/Down buttons and select ENTER.		OFF ↻MAIN MENU——2 PARAMETERS ASSISTANTS CHANGED PAR EXIT 00:00 ENTER
3	Scroll to COMMISSION DRIVE with the Up/Down buttons and select SEL.		OFF ↻ASSISTANTS——1 Spin the motor Commission drive Application Option modules References 1 & 2 EXIT SEL
4	Change the values suggested by the assistant to your preferences and then press SAVE after every change.		OFF ↻PAR EDIT—— 9901 LANGUAGE ENGLISH [0] EXIT SAVE

The Start-Up Assistant will guide you through the start-up.

The Start-Up Assistant guides you through the basic programming of a new drive. (You should familiarize yourself with basic control panel operation and follow the steps outlined above.) At the first start, the drive automatically suggests entering the first task, Language Select.The assistant also checks the values entered to prevent entries that are out of range.

The Start-Up Assistant is divided into tasks. You may activate the tasks one after the other, as the Start-Up Assistant suggests, or independently.

Note! If you want to set the parameters independently, use the Parameters mode.

The order of tasks presented by the Start-up Assistant depends on your entries. The following task list is typical.

Task name	Description
Spin the motor	• Prompts for control panel display language selection. • Prompts for motor data. • Guides user through rotation check.
Commission drive	Prompts for motor data.
Application	Prompts for application macro selection.

Task name	Description
References 1 & 2	• Prompts for the source of speed references 1 and 2. • Prompts for reference limits. • Prompts for frequency (or speed) limits.
Start/Stop Control	• Prompts for the source for start and stop commands. • Prompts for start and stop mode definition. • Prompts for acceleration and deceleration times.
Protections	• Prompts for current and torque limits. • Prompts for the use of Run enable and Start enable signals. • Prompts for the use of emergency stop. • Prompts for Fault function selection. • Prompts for Auto reset functions selection.
Constant Speeds	• Prompts for the use of constant speeds. • Prompts for constant speed values.
PID Control	• Prompts for PID settings. • Prompts for the source of process reference. • Prompts for reference limits. • Prompts for source, limits and units for the process actual value. • Defines the use of Sleep function.
Low Noise Setup	• Prompts for switching frequency. • Prompts for definition of Flux optimization. • Prompts for the use of Critical speeds.
Panel Display	Prompts for display variable and unit settings.
Timed Functions	Prompts for the use of Timed functions.
Output	• Prompts for the signals indicated through the relay outputs. • Prompts for signals indicated through the analog outputs AO1 and AO2. Sets the minimum, maximum, scaling and inversion values.

Changed Parameters Mode

To view (and edit) a listing of all parameters that have been changed from macro default values, follow these steps:

1	Select MENU to enter the menu.		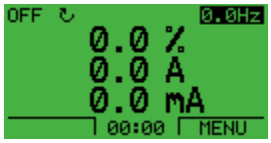
2	Select CHANGED PAR with the UP/ DOWN buttons and select ENTER.		
3	A list of changed parameters is displayed. Select EXIT to exit the parameters mode.		

Fault Logger Mode

Use the Fault Logger Mode to see drive fault history, fault state details and help for the faults.

1. Select FAULT LOGGER in the Main Menu.
2. Press ENTER to see the latest faults (up to 10 faults, maximum).
3. Press DETAIL to see details for the selected fault.
   - Details are available for the three latest faults.
4. Press DIAG to see the help description for the fault. See "Diagnostics" section.

Note! If a power off occurs, only the three latest faults will remain (with details only in the first fault).

Drive Parameter Backup Mode

Use the parameter backup mode to export parameters from one drive to another. The parameters are uploaded from a drive to the control panel and downloaded from the control panel to another drive. Two options are available:

Par Backup Mode

The Assistant Control Panel can store a full set of drive parameters.

The Par Backup mode has these functions:

- **Upload to Panel** – Copies all parameters from the drive to the Control Panel. This includes user sets of parameters (if defined) and internal parameters such as those created by the Motor Id Run. The Control Panel memory is non-volatile and does not depend on the panel's battery. To upload parameters to control panel, follow these steps:

1	Select MENU to enter the main menu.		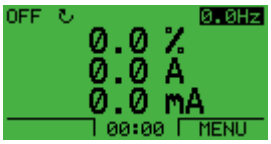
2	Select PAR BACKUP with the UP/ DOWN buttons and select ENTER.		
3	Scroll to Upload to Panel and select SEL.		

4	The text "Copying parameters" and a progress diagram is displayed. Select ABORT if you want to stop the process.		OFF ↻PAR BACKUP Copying parameters 51% ABORT 00:00
5	The text "Parameter upload successful" is displayed and the control panel returns to the PAR BACKUP menu. Select EXIT to return to the main menu. Now you can disconnect the panel.		OFF ↻MESSAGE Parameter upload successful 00:00 OFF ↻COPY MENU 1 UPLOAD TO PANEL DOWNLOAD TO DRIVE ALL DOWNLOAD APPLICATION EXIT 00:00 SEL

- **Download Full Set** – Restores the full parameter set from the Control Panel to the drive. Use this option to restore a drive, or to configure identical drives. This download does not include user sets of parameters.

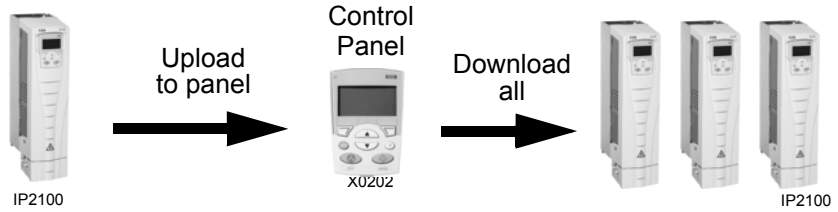

To download all parameters to drive, follow these steps:

1	Select MENU to enter the menu.		OFF ↻ 0.0Hz 0.0 % 0.0 A 0.0 mA 00:00 MENU
2	Select PAR BACKUP with the UP/ DOWN buttons.		OFF ↻MAIN MENU 5 CHANGED PAR CLOCK SET PAR BACKUP EXIT 00:00 ENTER
3	Scroll to Download to drive all and select SEL.		OFF ↻COPY MENU 2 UPLOAD TO PANEL DOWNLOAD TO DRIVE ALL DOWNLOAD APPLICATION EXIT 00:00 SEL
4	The text "restoring parameters" is displayed. Select ABORT if you want to stop the process.		OFF ↻PAR BACKUP Restoring parameters 51% ABORT 00:00

5	After the download stops, the message "Parameter download successful" is displayed and the control panel goes back to PAR BACKUP menu. Select EXIT to return to the main menu.		OFF MESSAGE Parameter download successful 00:00 OFF COPY MENU 2 UPLOAD TO PANEL DOWNLOAD TO DRIVE ALL DOWNLOAD APPLICATION EXIT 00:00 SEL

Note! Download Full Set writes all parameters to the drive, including motor parameters. Only use this function to restore a drive, or to transfer parameters to systems that are identical to the original system.

- **Download Application** – Copies a partial parameter set from the Control Panel to a drive. The partial set does not include internal motor parameters, parameters 9905…9909, 1605, 1607, 5201, nor any Group 51 and 53 parameters. Use this option to transfer parameters to systems that use similar configurations – the drive and motor sizes do not need to be the same.

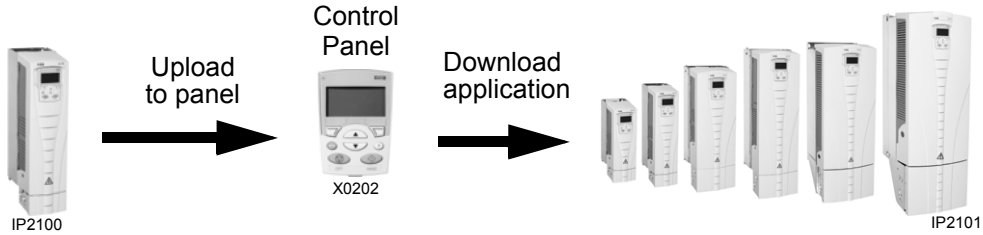

To download application to drive, follow these steps:

1	Select MENU to enter the menu.		OFF 0.0Hz 0.0 % 0.0 A 0.0 mA 00:00 MENU
2	Select PAR BACKUP with the UP/DOWN buttons.		OFF MAIN MENU 5 CHANGED PAR CLOCK SET PAR BACKUP EXIT 00:00 ENTER
3	Scroll to DOWNLOAD APPLICATION and select SEL.		OFF COPY MENU 3 UPLOAD TO PANEL DOWNLOAD TO DRIVE ALL DOWNLOAD APPLICATION EXIT 00:00 SEL
4	The text "Downloading parameters (partial)" is displayed. Select ABORT if you want to stop the process.		OFF PAR BACKUP Downloading parameters (partial) 51% ABORT 00:00

5	The text "Parameter download successful" is displayed and the control panel returns to PAR BACKUP menu. Select EXIT to return to the main menu.		OFF MESSAGE Parameter download successful 00:00 OFF COPY MENU 3 UPLOAD TO PANEL DOWNLOAD TO DRIVE ALL DOWNLOAD APPLICATION EXIT 00:00 SEL

- **Download User Set 1** - Copies USER S1 parameters (user sets are saved using parameter 9902 APPLIC MACRO) from the Control Panel to the drive.
- **Download User Set 2** - Copies USER S2 parameters from the Control Panel to the drive.

Handling Inexact Downloads

In some situations, an exact copy of the download is not appropriate for the target drive. Some examples:

- A download to an old drive specifies parameters/values that are not available on the old drive.
- A download (from an old drive) to a new drive does not have definitions for the new parameters – parameters that did not originally exist.
- A download can include an illegal value for the target drive, e.g. a backup from a small drive can have a switching frequency of 12 kHz whereas a big drive can only handle 8k Hz.

As a default, the control panel handles these situations by:

- Discarding parameters/values not available on the target drive.
- Using parameter default values when the download provides no values or invalid values.
- Providing a Differences List – A listing of the type and number of items that the target cannot accept exactly as specified.

LOC DIFFERENCES ----
VALUES UNDER MIN 3
VALUES OVER MAX 2
INVALID VALUES 1
EXTRA PARS 5
MISSING VALUES 7
READY SEL

You can either accept the default edits by pressing READY, or view and edit each item as follows:

1. Highlight an item type in the Differences List (left screen below) and press SEL to see the details for the selected type (right screen below).

LOC DIFFERENCES ----
VALUES UNDER MIN 3
VALUES OVER MAX 2
INVALID VALUES 1
EXTRA PARS 5
MISSING VALUES 7
READY SEL

→

LOC INVALID VAL
9902 APLIC MACRO
2606*SWITCHING FREQ
12 kHz
8 kHz
3401*DISP 1 SEL
EXIT EDIT

In the above-right "details" screen:

- The first item that requires editing is automatically highlighted and includes details: In general, the first item listed in the details is the value defined by the backup file. The second item listed is the "default edit."
- For tracking purposes, an asterisk initially appears by each item. As edits are made, the asterisks disappear.

2. In the illustrated example, the backup specifies a switching frequency of 12 kHz, but the target drive is limited to 8 kHz.
3. Press EDIT to edit the parameter. The display is the target drive's standard edit screen for the selected parameter.
4. Highlight the desired value for the target drive.
5. Press SAVE to save setting.
6. Press EXIT to step back to the differences view and continue for each remaining exception.
7. When your editing is complete, press READY in the Differences List and then select "Yes, save parameters."

Download Failures

In some situations, the drive may be unable to accept a download. In those cases, the control panel display is: "Parameter download failed" plus one of the following causes:

- Set not found – You are attempting to download a data set that was not defined in the backup. The remedy is to manually define the set, or upload the set from a drive that has the desired set definitions.
- Par lock – The remedy is to unlock the parameter set (parameter 1602).
- Incompat drive/model – The remedy is to perform backups only between drives of the same type (ACS/industrial or ACH/HVAC) and the same model (all ACH550).
- Too many differences – The remedy is to manually define a new set, or upload the set from a drive that more closely resembles the target drive.

Note! If upload or download of parameters is aborted, the partial parameter set is not implemented.

Clock Set Mode

The clock set mode is used for setting the time and date for the internal clock of the ACH550. In order to use the timer functions of the ACH550, the internal clock has to be set first. Date is used to determine weekdays and is visible in Fault logs.

To set the clock, follow these steps:

1	Select MENU to enter the main menu.		OFF ↻ 0.0Hz 0.0 % 0.0 A 0.0 % MENU
2	Scroll to Clock Set with the UP/DOWN buttons and select ENTER to enter the Clock Set mode.		OFF ↻MAIN MENU——4 ASSISTANTS CHANGED PAR CLOCK SET EXIT ENTER
3	Scroll to Clock Visibility with the UP/DOWN buttons and select SEL to change the visibility of the clock.		OFF ↻TIME & DATE——1 CLOCK VISIBILITY SET TIME TIME FORMAT SET DATE DATE FORMAT EXIT SEL
4	Scroll to Show Clock with the UP/DOWN buttons and select SEL to make the clock visible.		OFF ↻CLOCK VISIB——1 Show clock Hide clock EXIT SEL
5	Scroll to Set Time with the UP/DOWN buttons and select SEL.		OFF ↻TIME & DATE——2 CLOCK VISIBILITY SET TIME TIME FORMAT SET DATE DATE FORMAT EXIT 00:00 SEL
6	Change the hours and minutes with the UP/DOWN buttons and select OK to save the values. The active value is displayed in inverted color.		OFF ↻SET TIME—— 00:00 CANCEL OK
7	Scroll to Time Format with the UP/DOWN buttons and select SEL.		OFF ↻TIME & DATE——3 CLOCK VISIBILITY SET TIME TIME FORMAT SET DATE DATE FORMAT EXIT 00:00 SEL
8	The different formats are displayed. Select a format with the UP/DOWN buttons and select SEL to confirm the selection.		OFF ↻TIME FORMAT ——1 24-hour 12-hour CANCEL 00:00 SEL
9	Scroll to Set Date with the UP/DOWN buttons and select SEL.		OFF ↻TIME & DATE——4 CLOCK VISIBILITY SET TIME TIME FORMAT SET DATE DATE FORMAT EXIT 00:00 SEL

10	Change the days, months and year with the UP/DOWN buttons and select OK to save the values. The active value is displayed in inverted color.		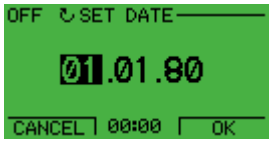
11	Scroll to Date Format with the UP/DOWN buttons and select SEL.		
12	The Date formats are displayed. Select a date format with the UP/DOWN buttons and select OK to confirm the selection.		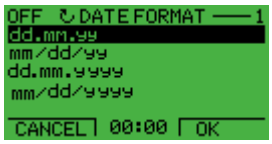
13	Select EXIT twice to return to the main menu.		

I/O Settings Mode

To view and edit the I/O settings, follow these steps:

1	Select MENU to enter the main menu.		OFF ↻ 0.0Hz 0.0 % 0.0 A 0.0 % MENU
2	Scroll to I/O Settings with the UP/DOWN buttons and select ENTER.		OFF ↻MAIN MENU——6 I/O SETTINGS PARAMETERS ASSISTANTS EXIT ENTER
3	Scroll to the I/O setting you want to view with the UP/DOWN buttons and select SEL.		OFF ↻I/O SETTINGS—1 DIGITAL INPUTS (DI) ANALOG INPUTS (AI) RELAY OUTPUTS (ROUT) ANALOG OUTPUTS (AOUT) SERIAL COMM EXIT SEL
4	Select the setting you want to view with the UP/DOWN buttons and select OK.		OFF ↻SHOW I/O ——— -DI1- 1001:START/STOP (E1) 1002:START/STOP (E1) EXIT OK
5	You can change the value with the UP/DOWN buttons and save it by selecting SAVE. If you do not want to change the setting, select CANCEL.		OFF ↻PAR EDIT——— 1001 EXT1 COMMANDS DI1 [1] CANCEL SAVE
6	Select EXIT to return to the main menu.		OFF ↻SHOW I/O ——— -DI1- 1001:START/STOP (E1) 1002:START/STOP (E1) EXIT OK

Application Macros

Overview

Macros change a group of parameters to new, predefined values designed for specific applications. Use macros to minimize the need for manual editing of parameters. Selecting a macro sets all other parameters to their default values, except:

- Group 99: Start-up Data parameters
- The PARAMETER LOCK 1602
- The PARAM SAVE 1607
- The COMM FAULT FUNC 3018 and COMM FAULT TIME 3019
- The COMM PROT SEL 9802
- Groups 50…53 serial communication parameters
- Group 29: Maintenance triggers

After selecting a macro, additional parameter changes can be made manually using the control panel.

Application macros are enabled by setting the value for parameter 9902 APPLIC MACRO. By default, HVAC default (value 1) is the enabled macro.

General Considerations

The following considerations apply for all macros:

- When using a direct speed reference in AUTO mode, connect the speed reference to analog input 1 (AI1), and provide the START command using digital input 1 (DI1). In HAND/OFF mode, the control panel provides the speed reference and START command.
- When using process PID, connect the feedback signal to analog input 2 (AI2). As a default, the control panel sets the Setpoint, but analog input 1 can be used as an alternate source. You can set up process PID using parameters (Group 40) or using the PID control assistant (recommended).

Application / Macro Listing

This section describes the following macros:

9902 Value	Macro		9902 Value	Macro
1	HVAC default		8	Internal timer
2	Supply fan		9	Internal timer with constant speeds
3	Return fan		10	Floating point
4	Cooling tower fan		11	Dual setpoint PID
5	Condenser		12	Dual setpoint PID with constant speeds
6	Booster pump		13	E-bypass
7	Pump alternation		14	Hand Control

Selecting an Application Macro

To select a macro, follow these steps:

1	Select MENU to enter the main menu.		OFF ↻ 0.0Hz 0.0 % 0.0 A 0.0 % 00:00 MENU
2	Select ASSISTANTS with the Up/Down buttons and select ENTER.		OFF ↻MAIN MENU——2 PARAMETERS ASSISTANTS CHANGED PAR EXIT 00:00 ENTER
3	Scroll to APPLICATION and select ENTER.		OFF ↻ASSISTANTS——3 Spin the motor Commission drive Application Option modules References 1 & 2 EXIT SEL
4	Select a macro with the Up/Down buttons and select SAVE.		OFF ↻PAR EDIT—— 9902 APPLIC MACRO HVAC DEFAULT [1] CANCEL 00:00 SAVE

Restoring Defaults

To restore the factory default settings, select the application macro HVAC Default.

Control Wiring

Each macro has specific requirements for control wiring. For general details about the ACH550 control wiring terminals, see "Control Terminal Descriptions" on page 272. Specific wiring requirements are included with each macro description.

HVAC Default

This macro provides the factory default parameter settings for the ACH550-UH. Factory defaults can be restored at any time by setting parameter 9902 to 1. The diagram below shows typical wiring using this macro. When using direct speed reference in AUTO mode or process PID, see "General Considerations" on page 43.

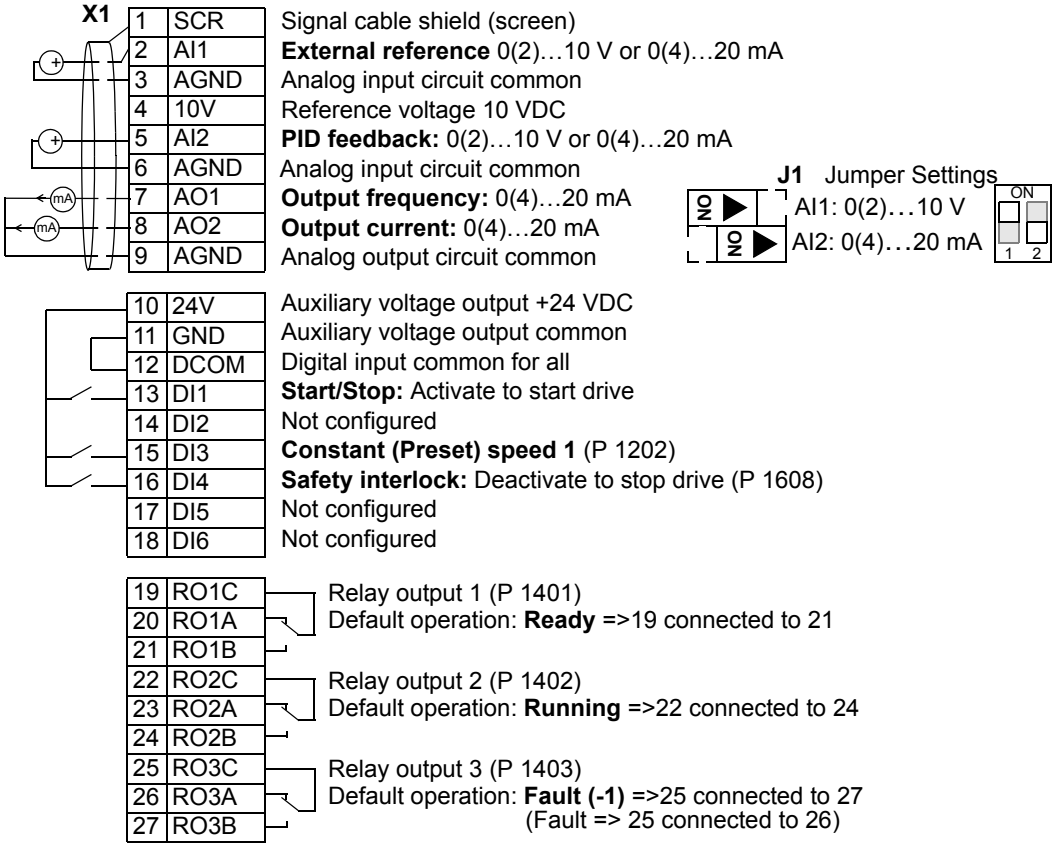

Parameters Changed Relative to HVAC Default			
Parameter	**Value**	**Parameter**	**Value**
None (Default macro)			

Supply Fan

This macro configures for supply fan applications where the supply fan brings fresh air in according to signals received from a transducer. When using direct speed reference in AUTO mode or process PID, see "General Considerations" on page 43.

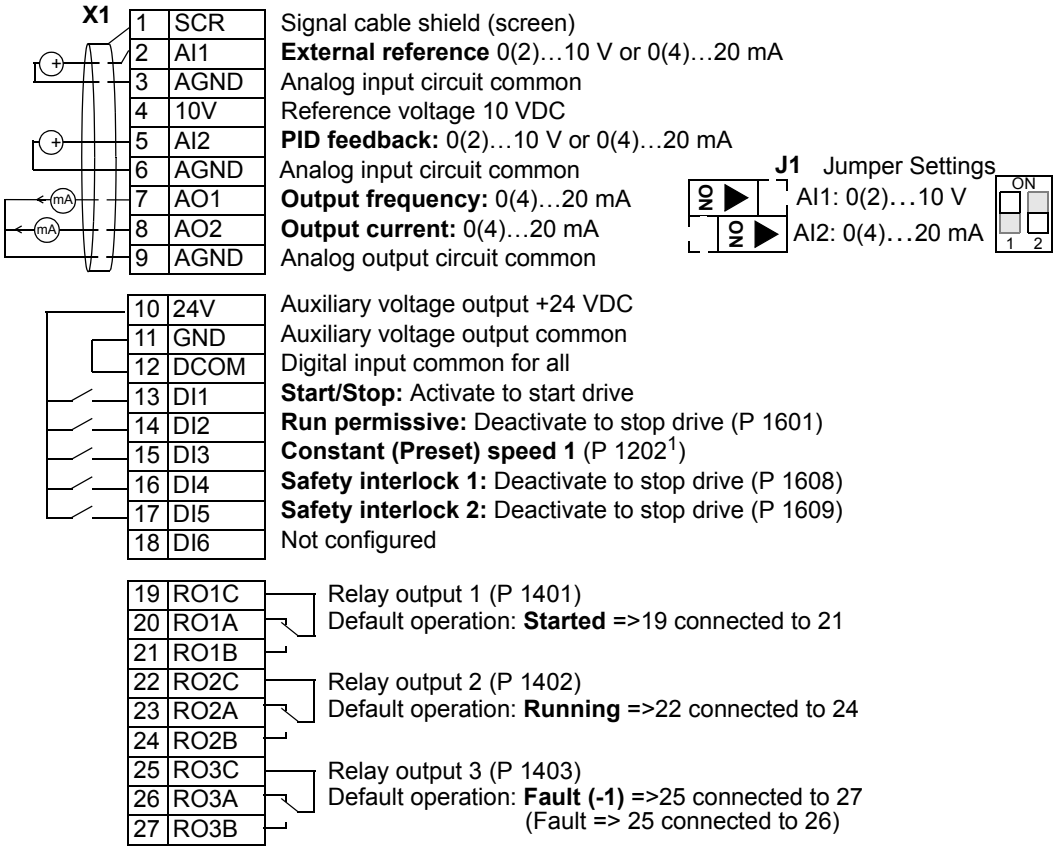

Parameters Changed Relative to HVAC Default					
Parameter		Value	Parameter		Value
9902	APPLIC MACRO	2 (SUPPLYFAN)	3207	SUPERV 3 PARAM	0103 (OUTPUT FREQ)
1401	RELAY OUTPUT 1	7 (STARTED)	4001	GAIN	0.7
1601	RUN ENABLE	2 (DI2)	4002	INTEGRATION TIME	10.0 s
1609	START ENABLE 2	5 (DI5)	4101	GAIN	1.0
2202	ACCELER TIME 1	15.0 s	4102	INTEGRATION TIME	60.0 s
2203	DECELER TIME 1	15.0 s			

Return Fan

This macro configures for return fan applications where the return fan removes air according to signals received from a transducer. When using direct speed reference in AUTO mode or process PID, see "General Considerations" on page 43.

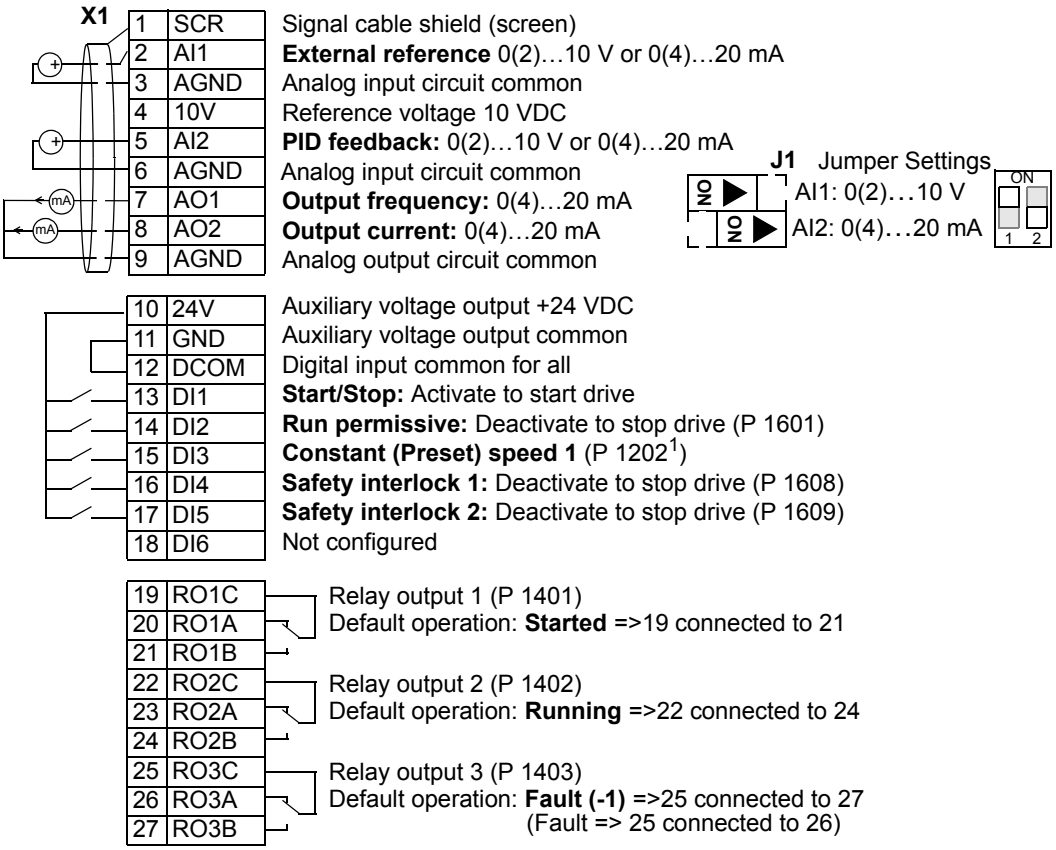

Signal cable shield (screen)
External reference 0(2)…10 V or 0(4)…20 mA
Analog input circuit common
Reference voltage 10 VDC
PID feedback: 0(2)…10 V or 0(4)…20 mA
Analog input circuit common
Output frequency: 0(4)…20 mA
Output current: 0(4)…20 mA
Analog output circuit common

Auxiliary voltage output +24 VDC
Auxiliary voltage output common
Digital input common for all
Start/Stop: Activate to start drive
Run permissive: Deactivate to stop drive (P 1601)
Constant (Preset) speed 1 (P 1202[1])
Safety interlock 1: Deactivate to stop drive (P 1608)
Safety interlock 2: Deactivate to stop drive (P 1609)
Not configured

Relay output 1 (P 1401)
Default operation: **Started** =>19 connected to 21

Relay output 2 (P 1402)
Default operation: **Running** =>22 connected to 24

Relay output 3 (P 1403)
Default operation: **Fault (-1)** =>25 connected to 27
(Fault => 25 connected to 26)

Parameters Changed Relative to HVAC Default					
Parameter		**Value**	**Parameter**		**Value**
9902	APPLIC MACRO	3 (RETURNFAN)	3207	SUPERV 3 PARAM	0103 (OUTPUT FREQ)
1401	RELAY OUTPUT 1	7 (STARTED)	4001	GAIN	0.7
1601	RUN ENABLE	2 (DI2)	4002	INTEGRATION TIME	10.0 s
1609	START ENABLE 2	5 (DI5)	4101	GAIN	1.0
2202	ACCELER TIME 1	15.0 s	4102	INTEGRATION TIME	60.0 s
2203	DECELER TIME 1	15.0 s			

Cooling Tower Fan

This macro configures for cooling tower fan applications where the fan speed is controlled according to the signals received from a transducer. When using direct speed reference in AUTO mode or process PID, see "General Considerations" on page 43.

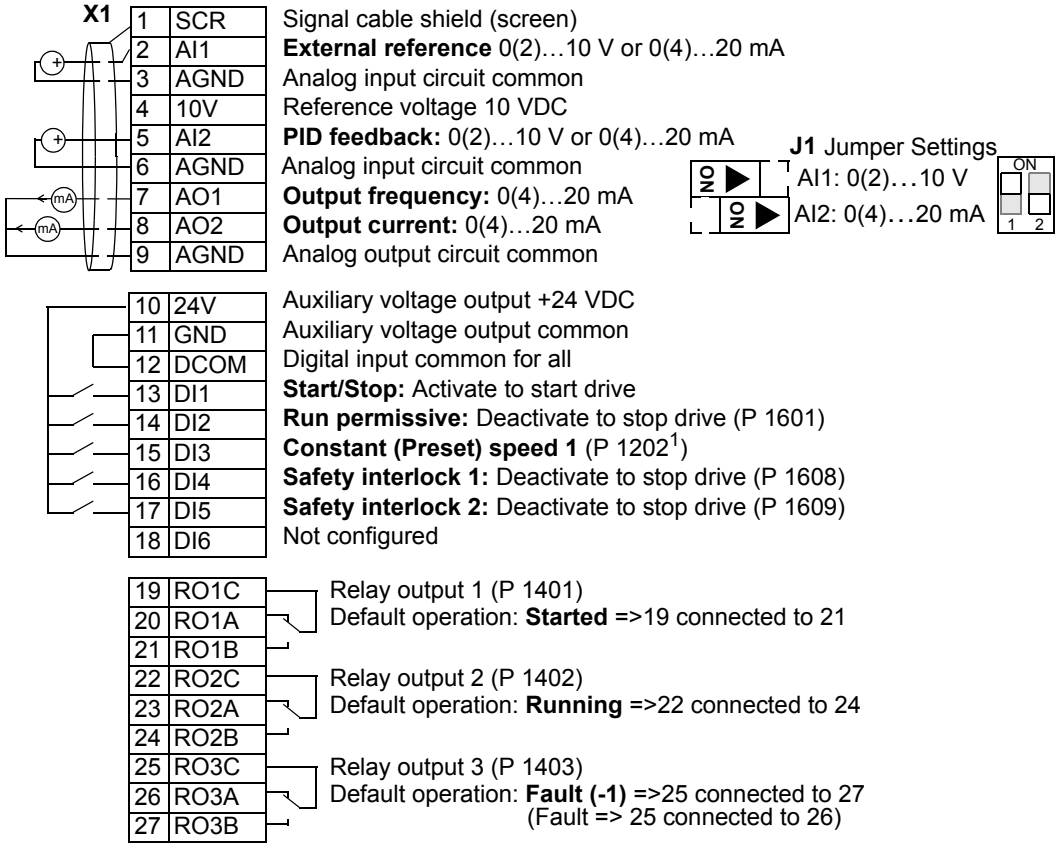

Parameters Changed Relative to HVAC Default					
Parameter		Value	Parameter		Value
9902	APPLIC MACRO	4 (CLNGTWRFAN)	3207	SUPERV 3 PARAM	0103 (OUTPUT FREQ)
1401	RELAY OUTPUT 1	7 (STARTED)	4101	GAIN	1.0
1601	RUN ENABLE	2 (DI2)	4102	INTEGRATION TIME	60.0 s
1609	START ENABLE 2	5 (DI5)			

Condenser

This macro configures for condenser and liquid cooler applications where fan speed is controlled according to signals received from a transducer. When using direct speed reference in AUTO mode or process PID, see "General Considerations" on page 43.

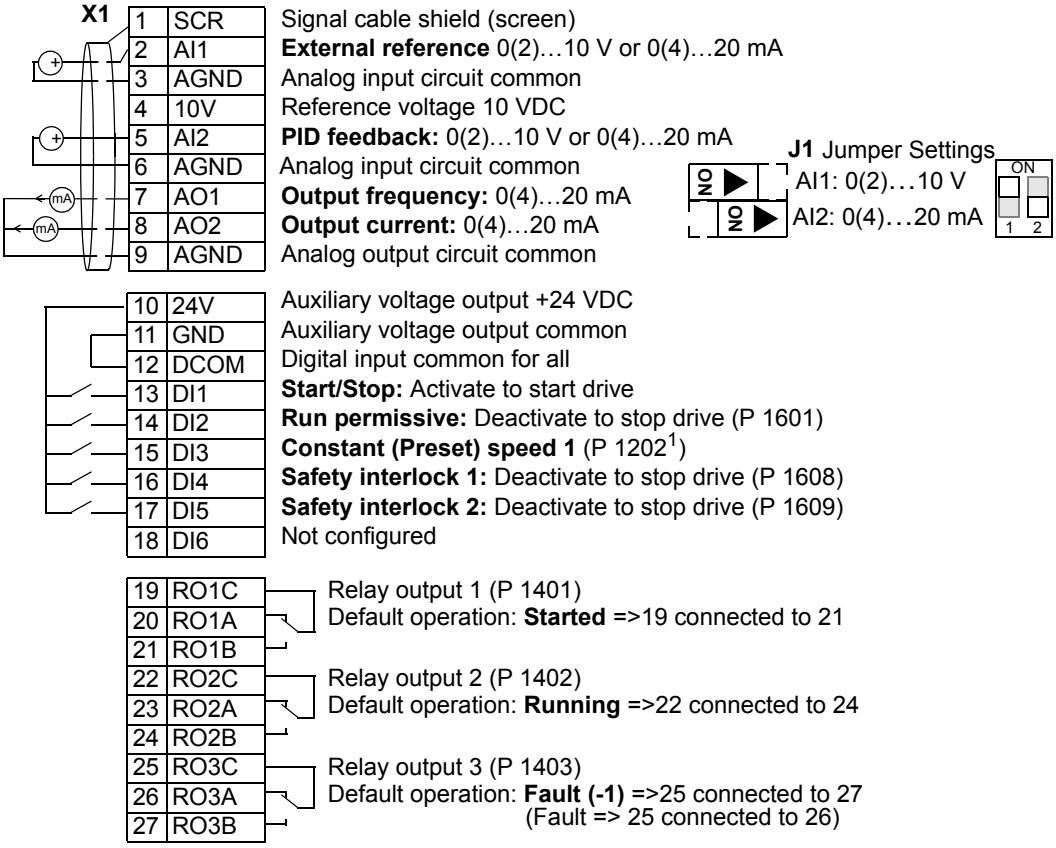

Parameters Changed Relative to HVAC Default					
Parameter		Value	Parameter		Value
9902	APPLIC MACRO	5 (CONDENSER)	2203	DECELER TIME 1	10.0 s
1401	RELAY OUTPUT 1	7 (STARTED)	3207	SUPERV 3 PARAM	0103 (OUTPUT FREQ)
1601	RUN ENABLE	2 (DI2)	4005	ERROR VALUE INV	1 (YES)
1609	START ENABLE 2	5 (DI5)	4101	GAIN	1.0
2202	ACCELER TIME 1	10.0 s	4102	INTEGRATION TIME	60.0 s

Booster Pump

This macro configures for booster pump applications where the pump speed is controlled according to a signal received from a transducer. When using direct speed reference in AUTO mode or process PID, see "General Considerations" on page 43.

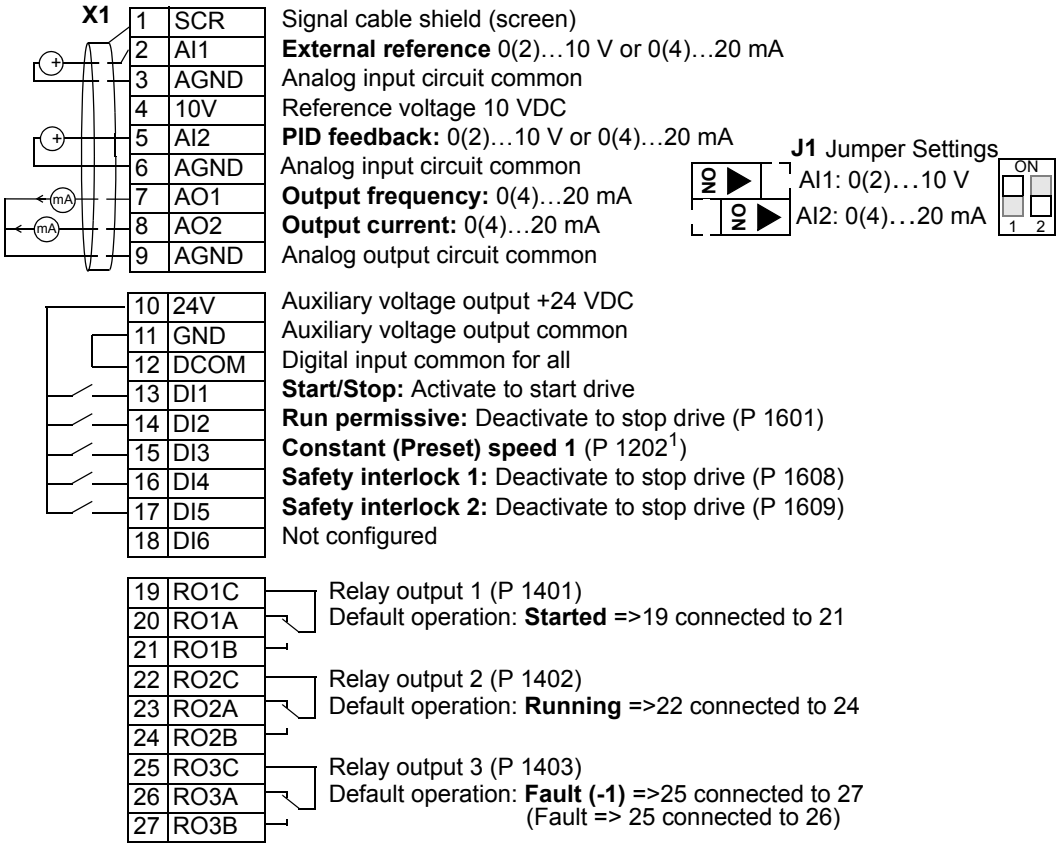

Parameters Changed Relative to HVAC Default					
Parameter		Value	Parameter		Value
9902	APPLIC MACRO	6 (BOOSTERPUMP)	2203	DECELER TIME 1	5.0 s
1401	RELAY OUTPUT 1	7 (STARTED)	3207	SUPERV 3 PARAM	0103 (OUTPUT FREQ)
1601	RUN ENABLE	2 (DI2)	4001	GAIN	1.0
1609	START ENABLE 2	5 (DI5)	4002	INTEGRATION TIME	60.0 s
2202	ACCELER TIME 1	5.0 s			

Pump Alternation

This macro configures for pump alternation applications, usually used in booster stations. To adjust/maintain pressure in the network, the speed of the one pump changes according to a signal received from a pressure transducer. When the variable speed pump reaches a maximum speed limit, auxiliary pumps start as needed. When using process PID, see "General Considerations" on page 43. To use more than one (the default) Auxiliary pump, see parameter group 81.

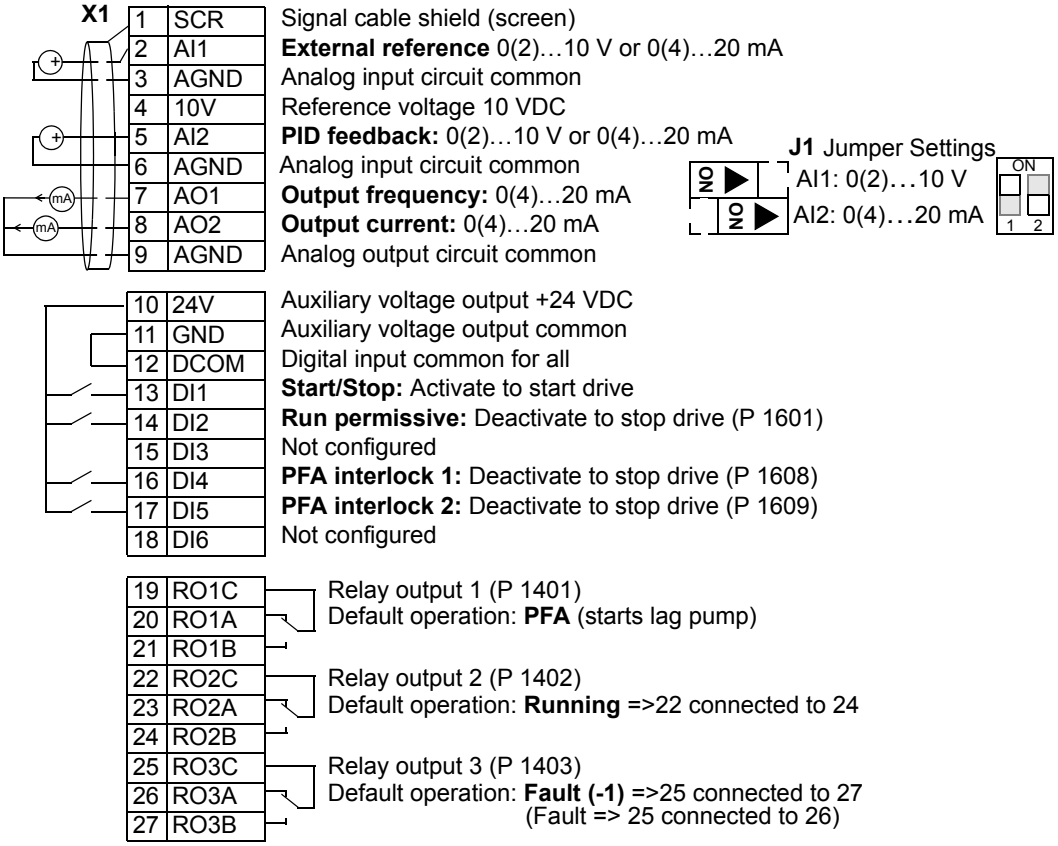

Parameters Changed Relative to HVAC Default					
Parameter		Value	Parameter		Value
9902	APPLIC MACRO	7 (PUMPALTERN)	1609	START ENABLE 2	5 (DI5)
1105	REF1 MAX	62Hz/1860rpm	2208	EM DEC TIME	62HZ
1201	CONST SPEED SEL	0 (NOT SEL)	2202	ACCELER TIME 1	5.0 s
1401	RELAY OUTPUT 1	31 (PFA)	2203	DECELER TIME 1	5.0 s
1503	AO1 CONTENT MAX	62HZ	3207	SUPERV 3 PARAM	0103 (OUTPUT FREQ)
1508	AO2 CONTENT MIN	0.0%	4101	GAIN	1.0
1509	AO2 CONTENT MAX	100.0%	4102	INTEGRATION TIME	60.0 s
1601	RUN ENABLE	2 (DI2)	8123	PFA ENABLE	1 (ACTIVE)
1608	START ENABLE 1	0 (NOT SEL)			

Internal Timer

This macro configures for applications where a built-in timer starts and stops the motor. When the variable speed pump reaches a maximum speed limit, auxiliary pumps start as needed. When using direct speed reference in AUTO mode or process PID, see "General Considerations" on page 43.

Momentarily activating digital input 3 (DI3) provides a boost function which operates the motor. See group 36, Timer Functions, for more information on setting up timers.

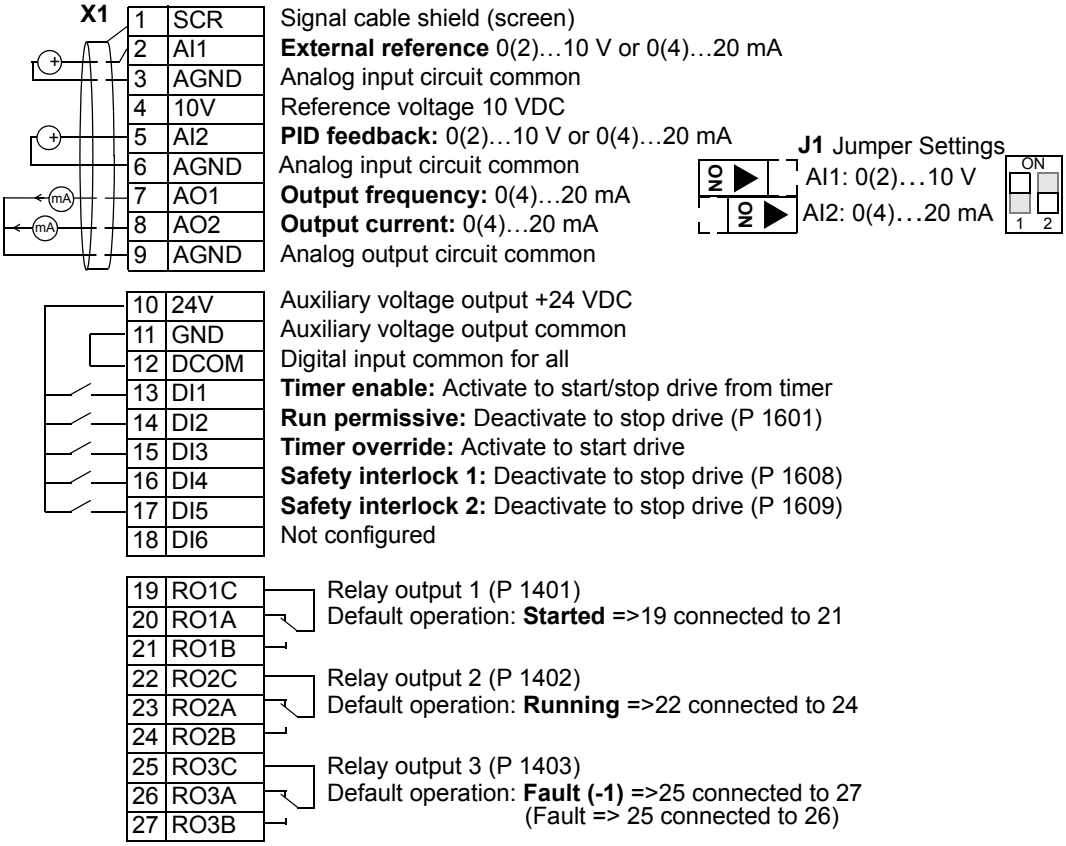

Parameters Changed Relative to HVAC Default					
Parameter		Value	Parameter		Value
9902	APPLIC MACRO	8 (INT TIMER)	1609	START ENABLE 2	5 (DI5)
1001	EXT1 COMMANDS	11 (TIMER1)	3207	SUPERV 3 PARAM	0103 (OUTPUT FREQ)
1002	EXT2 COMMANDS	11 (TIMER1)	3601	TIMERS ENABLE	1 (DI1)
1201	CONST SPEED SEL	0 (NOT SEL)	3622	BOOST SEL	3 (DI3)
1401	RELAY OUTPUT 1	7 (STARTED)	3626	TIMER 1 SRC	23 (B+P3+P2+P1)
1601	RUN ENABLE	2 (DI2)			

Internal Timer with Constant Speeds / PRV

This macro configures for applications such as a timed powered roof ventilator (PRV) which alternates between two constant speeds (constant speed 1 and 2) based on a built-in timer.

Momentarily activating digital input 3 (DI3) provides a boost function which operates the motor. See group 36, Timer Functions, for more information on setting up timers.

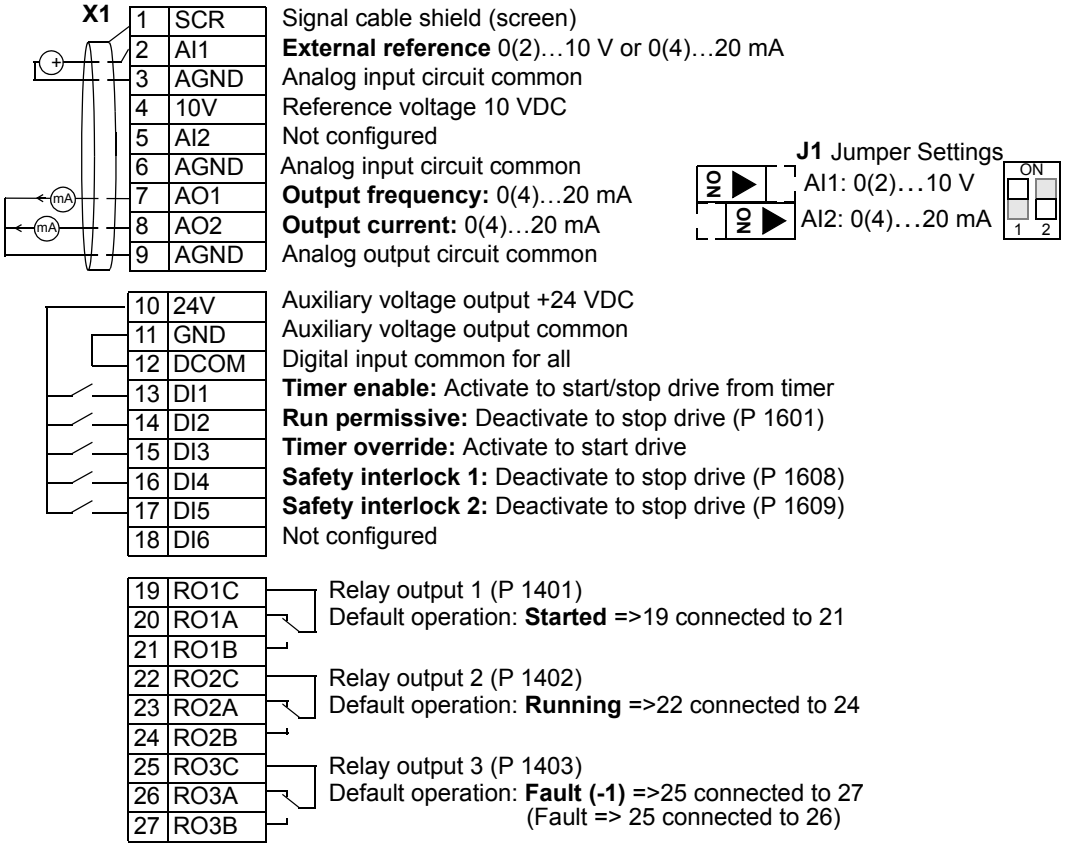

Parameters Changed Relative to HVAC Default					
Parameter		Value	Parameter		Value
9902	APPLIC MACRO	9 (INT TIMER CS)	3416	SIGNAL 3 MIN	-200.0%
1002	EXT2 COMMANDS	0 (NOT SEL)	3417	SIGNAL 3 MAX	200.0%
1103	REF1 SEL	0 (KEYPAD)	3419	OUTPUT 3 DSP UNIT	4 (%)
1106	REF3 SEL	2 (AI2)	3420	OUTPUT 3 MIN	-200.0%
1201	CONST SPEED SEL	15 (TIMER1)	3421	OUTPUT 3 MAX	200.0%
1301	MINIMUM AI1	0.0%	3622	BOOST SEL	3 (DI3)
1401	RELAY OUTPUT 1	7 (STARTED)	4001	GAIN	1.0
1601	RUN ENABLE	2 (DI2)	4002	INTEGRATION TIME	60.0 s
1609	START ENABLE 2	5 (DI5)	4101	GAIN	1.0
3207	SUPERV 3 PARAM	0103 (OUTPUT FREQ)	4102	INTEGRATION TIME	60.0 s
3415	SIGNAL 3 PARAM	0105 (TORQUE)	4110	SETPOINT SEL	1 (AI1)

Floating Point

This application macro is for applications where speed reference needs to be controlled through digital inputs (DI5 & DI6). By activating digital input 5, the speed reference increases, by activating digital input 6, the speed reference decreases. If both digital inputs are active or inactive, the reference does not change.

Note! When constant speed 1 is activated using digital input 3 (DI3), the reference speed is the value of parameter 1202. The value remains as the reference speed when digital input 3 is deactivated.

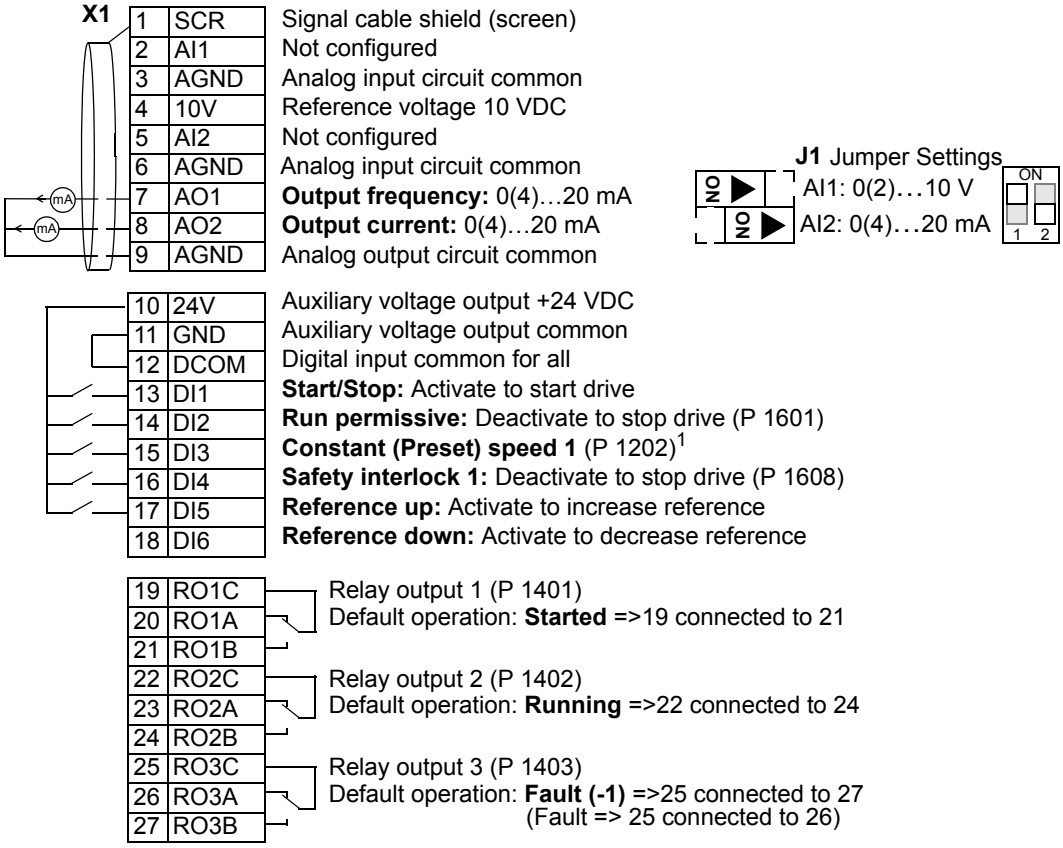

Parameters Changed Relative to HVAC Default					
Parameter		Value	Parameter		Value
9902	APPLIC MACRO	10 (FLOATINGPNT)	3416	SIGNAL 3 MIN	-200.0%
1103	REF1 SEL	7 (DI5U, 6D)	3417	SIGNAL 3 MAX	200.0%
1401	RELAY OUTPUT 1	7 (STARTED)	3419	OUTPUT 3 DSP UNIT	4 (%)
1601	RUN ENABLE	2 (DI2)	3420	OUTPUT 3 MIN	-200.0%
3207	SUPERV 3 PARAM	0103 (OUTPUT FREQ)	3421	OUTPUT 3 MAX	200.0%
3415	SIGNAL 3 PARAM	0105 (TORQUE)			

Dual Setpoint with PID

This macro configures for dual setpoint PID applications, where activating digital input 3 (DI3) changes the process PID controller's setpoint to another value. When using direct speed reference in AUTO mode or process PID, see "General Considerations" on page 43. Set process PID setpoints (internal to the drive) using parameters 4011 (SET1) and 4111 (SET2).

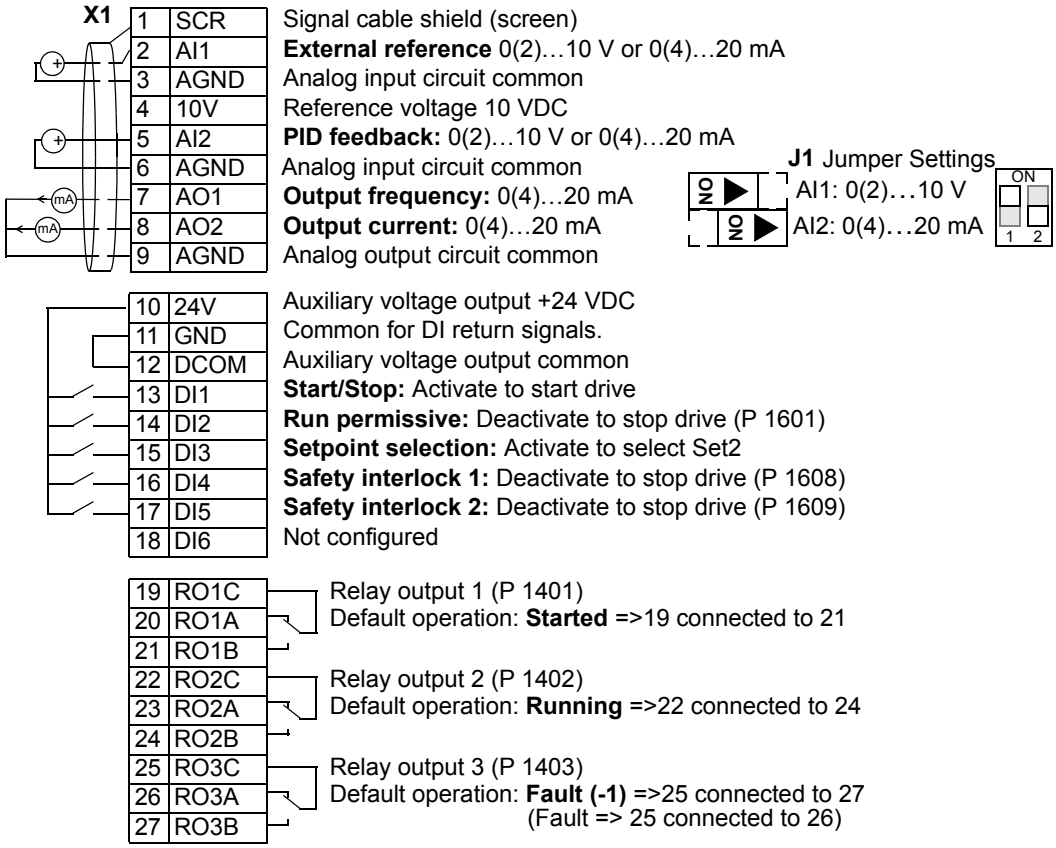

Parameters Changed Relative to HVAC Default					
Parameter		Value	Parameter		Value
9902	APPLIC MACRO	11 (DUAL SETPNT)	4010	SETPOINT SEL	19 (INTERNAL)
1201	CONST SPEED SEL	0 (NOT SEL)	4011	INTERNAL SETPNT	50.0%
1401	RELAY OUTPUT 1	7 (STARTED)	4027	PID 1 PARAM SET	3 (DI3)
1601	RUN ENABLE	2 (DI2)	4110	SETPOINT SEL	19 (INTERNAL)
1609	START ENABLE 2	5 (DI5)	4111	INTERNAL SETPNT	100.0%
3207	SUPERV 3 PARAM	0103 (OUTPUT FREQ)			

Dual Setpoint with PID and Constant Speeds

This macro configures for applications with 2 constant speeds, active PID and PID alternating between two setpoints using digital inputs. Set PID setpoints (internal to the drive) using parameters 4011 (SET1) and 4111 (SET2). The digital input DI3 selects the setpoints.

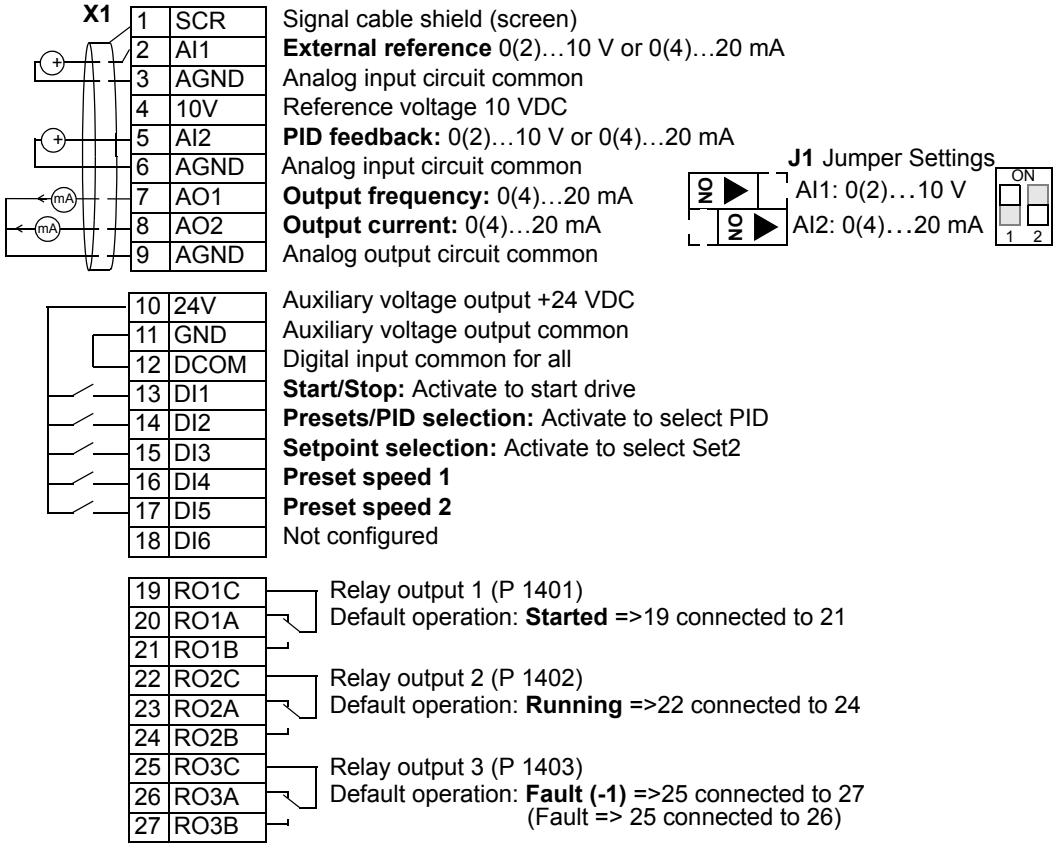

Parameters Changed Relative to HVAC Default					
Parameter		Value	Parameter		Value
9902	APPLIC MACRO	12 (DUAL SPNTCS)	3207	SUPERV 3 PARAM	0103 (OUTPUT FREQ)
1102	EXT1/EXT2 SEL	2 (DI2)	4001	GAIN	0.7
1201	CONST SPEED SEL	11 (DI5, 6)	4002	INTEGRATION TIME	10.0 s
1401	RELAY OUTPUT 1	7 (STARTED)	4010	SETPOINT SEL	19 (INTERNAL)
1608	START ENABLE 1	0 (NOT SEL)	4011	INTERNAL SETPNT	50.0%
2108	START INHIBIT	1 (ON)	4027	PID 1 PARAM SET	3 (DI3)
2202	ACCELER TIME 1	10.0 s	4101	GAIN	0.7
2203	DECELER TIME 1	10.0 s	4102	INTEGRATION TIME	10.0 s
3105	AR OVERVOLTAGE	0 (DISABLE)	4110	SETPOINT SEL	19 (INTERNAL)
3107	AR AI<MIN	0 (DISABLE)	4111	INTERNAL SETPNT	100.0%

E-bypass

This macro configures for an Electronic Bypass device which can bypass the drive and connect the motor direct on-line. When using direct speed reference in AUTO mode or process PID, see "General Considerations" on page 43.

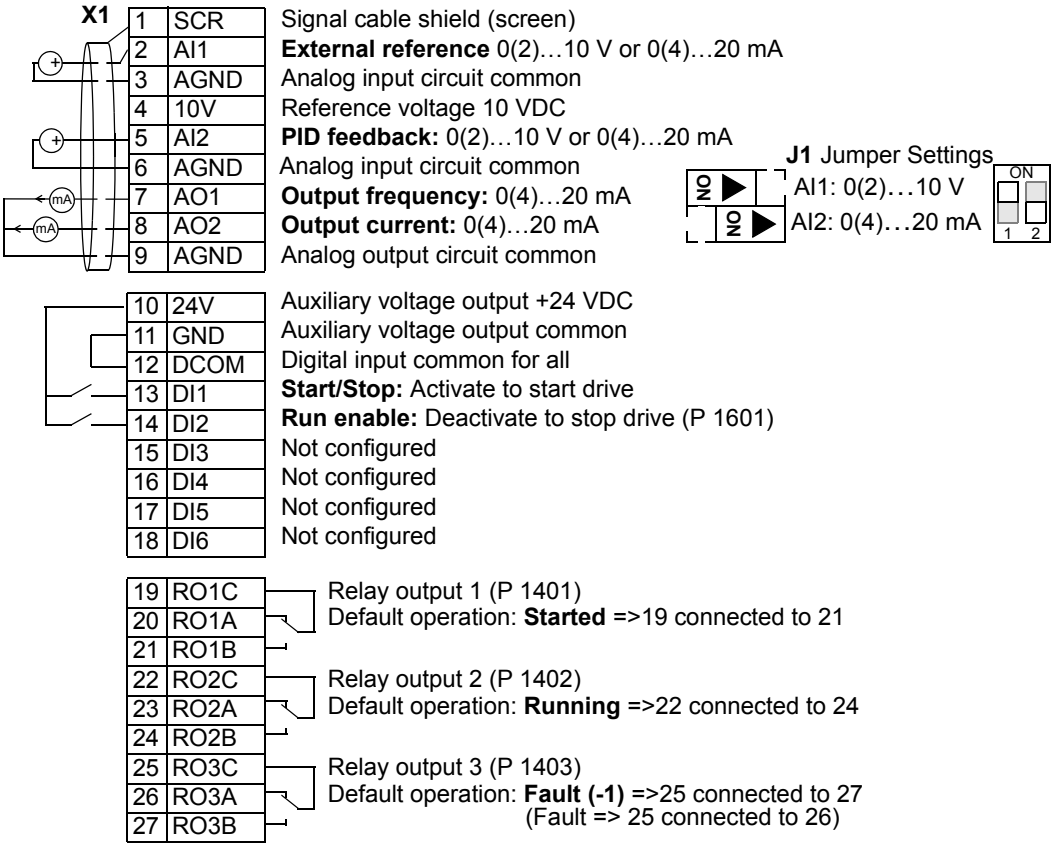

Parameters Changed Relative to HVAC Default					
Parameter		**Value**	**Parameter**		**Value**
9902	APPLIC MACRO	13 (E-BYPASS)	1608	START ENABLE 1	0 (NOT SEL)
1201	CONST SPEED SEL	0 (NOT SEL)	2108	START INHIBIT	1 (ON)
1401	RELAY OUTPUT 1	7 (STARTED)	3207	SUPERV 3 PARAM	0103 (OUTPUT FREQ)
1601	RUN ENABLE	2 (DI2)			

Hand Control

This macro configures for drive control using only the control panel with no automated control. Typically, this is a temporary configuration used prior to control wiring.

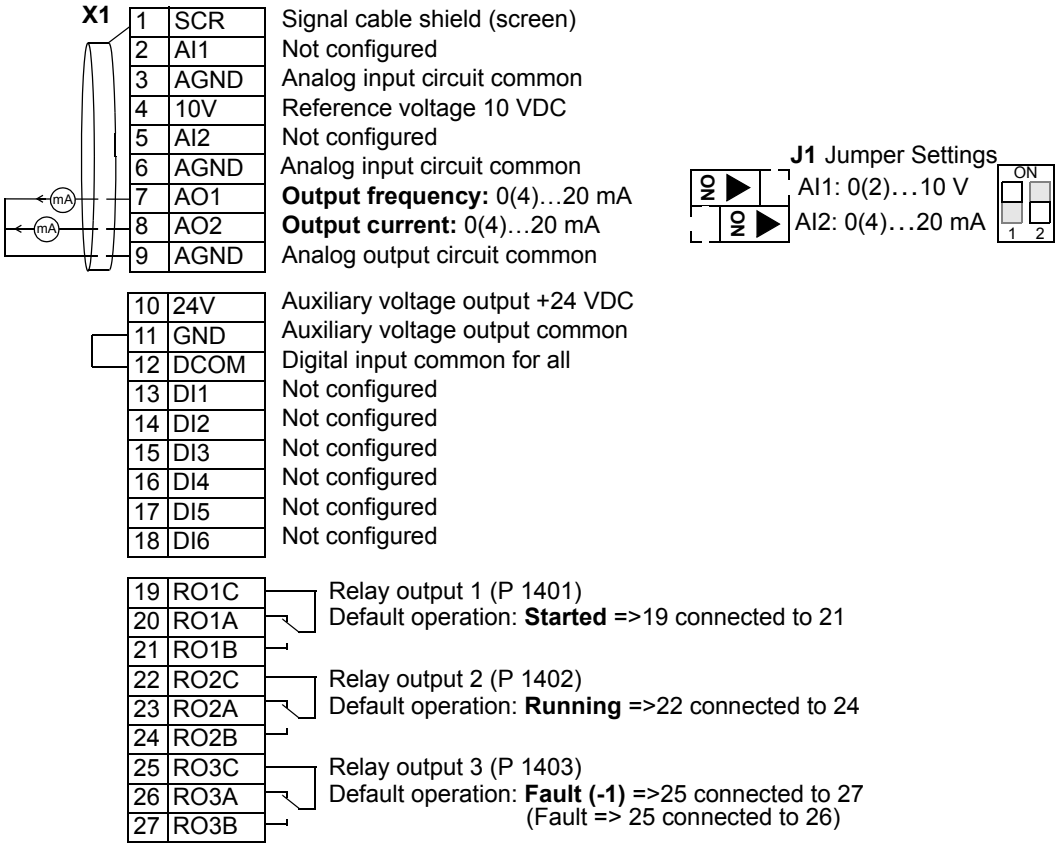

Parameters Changed Relative to HVAC Default					
Parameter		**Value**	**Parameter**		**Value**
9902	APPLIC MACRO	14 (HAND CONTROL)	3415	SIGNAL 3 PARAM	100 (NOT SEL)
1001	EXT1 COMMANDS	0 (NOT SEL)	3416	SIGNAL 3 MIN	(-)
1002	EXT2 COMMANDS	0 (NOT SEL)	3417	SIGNAL 3 MAX	(-)
1106	REF3 SEL	2 (AI2)	3418	OUTPUT 3 DSP FORM	(-)
1201	CONST SPEED SEL	0 (NOT SEL)	3419	OUTPUT 3 DSP UNIT	(-)
1301	MINIMUM AI1	0.0%	3420	OUTPUT 3 MIN	(-)
1304	MINIMUM AI2	0.0%	3421	OUTPUT 3 MAX	(-)
1401	RELAY OUTPUT 1	7 (STARTED)	4001	GAIN	1.0
1504	MINIMUM AO1	0.0mA	4002	INTEGRATION TIME	60.0 s
1510	MINIMUM AO2	0.0mA	4010	SETPOINT SEL	1 (AI1)
1601	RUN ENABLE	2 (DI2)	4101	GAIN	1.0
1608	START ENABLE 1	0 (NOT SEL)	4102	INTEGRATION TIME	60.0 s
2108	START INHIBIT	1 (ON)	4110	SETPOINT SEL	1 (AI1)
3207	SUPERV 3 PARAM	0103 (OUTPUT FREQ)	4210	SETPOINT SEL	1 (AI1)

Parameter Descriptions

Parameter data is specific to ACH550 firmware version 1.51.

Group 99: Start-up Data

This group defines special Start-up data required to:

- Set up the drive.
- Enter motor information

Note! Parameters checked under the heading "S" can be modified only when the drive is stopped.

Group 99: Start-up Data					
Code	**Description**	**Range**	**Resolution**	**Default**	**S**
9901	**LANGUAGE** Selects the display language. 0 = ENGLISH 1 = ENGLISH (AM) 2 = DEUTSCH 3 = ITALIANO 4 = ESPAÑOL 5 = PORTUGUES 6 = NEDERLANDS 7 = FRANCAIS 8 = DANSK 9 = SUOMI 10 = SVENSKA 11 = RUSSKI 12 = POLSKI 13 = TÜRKCE	**0…13**	**1**	**0**	
9902	**APPLIC MACRO** Selects an application macro. Application macros automatically edit parameters to configure the ACH550 for a particular application. See "Application Macros" for application macro descriptions. 1 = HVAC DEFAULT 2 = SUPPLY FAN 3 = RETURN FAN 4 = COOLING TOWER FAN 5 = CONDENSER 6 = BOOSTER PUMP 7 = PUMP ALTERNATION 8 = INTERNAL TIMER 9 = INTERNAL TIMER WITH CONSTANT SPEEDS 10 = FLOATING POINT 11 = DUAL SETPOINT PID 12 = DUAL SETPOINT PID WITH CONSTANT SPEEDS 13 = E -BYPASS 14 = HAND CONTROL	**1…14**	**1**	**1**	✓
9904	**MOTOR CTRL MOD** Selects the motor control mode. 1 = VECTOR: SPEED – sensorless vector control mode. • Reference 1 is speed reference in rpm. • Reference 2 is speed reference in % (100% is absolute maximum speed, equal to the value of parameter 2002 MAXIMUM SPEED, or 2001 MINIMUM SPEED if the absolute value of the minimum speed is greater than the maximum speed). 3 = SCALAR: FREQ – scalar control mode. • Reference 1 is frequency reference in Hz. • Reference 2 is frequency reference in % (100% is absolute maximum frequency, equal to the value of parameter 2008 MAXIMUM FREQUENCY, or 2007 MINIMUM FREQUENCY if the absolute value of the minimum speed is greater than the maximum speed).	**1, 3**	**1**	**3**	✓

Group 99: Start-up Data					
Code	**Description**	**Range**	**Resolution**	**Default**	**S**
9905	**MOTOR NOM VOLT**	**115…345 V (200 V, US)** **230…690 V (400 V, US)** **288…862 V (600 V, US)**	**1 V** **1 V** **1 V**	**230 V** **460 V** **575 V**	✓
	Defines the nominal motor voltage. • Must equal the value on the motor rating plate. • Sets the maximum drive output voltage supplied to the motor. • The ACH550 cannot supply the motor with a voltage greater than the mains voltage. 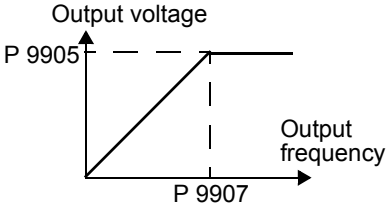				
9906	**MOTOR NOM CURR**	**0.15*I_{2N}…1.5*I_{2N}**	**0.1 A**	**1.5*I_{2N}**	✓
	Defines the nominal motor current. • Must equal the value on the motor rating plate. • Range allowed: (0.2…2.0) · I_N (where I_N is drive current).				
9907	**MOTOR NOM FREQ**	**10.0…500 Hz**	**0.1 Hz**	**60 Hz (US)**	✓
	Defines the nominal motor frequency. • Range: 10…500 Hz (typically 50 or 60 Hz) • Sets the frequency at which output voltage equals the MOTOR NOM VOLT. • Field weakening point = Norm freq * Supply Volt / Mot Nom Volt				
9908	**MOTOR NOM SPEED**	**50…30000 rpm**	**1 rpm**	Size dependent	✓
	Defines the nominal motor speed. • Must equal the value on the motor rating plate.				
9909	**MOTOR NOM POWER**	**0.15…1.5*P_N**	**0.1 Hp**	**0.2 HP (US)**	✓
	Defines the nominal motor power. • Must equal the value on the motor rating plate.				
9910	**MOTOR ID RUN**	**0, 1**	**1**	**0**	✓
	This parameter controls a self-calibration process called the Motor ID Run. During this process, the drive operates the motor and makes measurements in order to identify motor characteristics and create a model used for internal calculations. An ID Run is especially effective when: • Operation point is near zero speed. • Operation requires a torque range above the motor nominal torque, over a wide speed range, and without any measured speed feedback (i.e. without a pulse encoder). **First Start.** If no Motor ID Run is performed, the drive estimates motor characteristics when the drive is first run. This "First Start" occurs automatically* at the next run command after any motor parameter is changed. In order to estimate characteristics and create a motor model, the First Start magnetizes the motor for 10 to 15 seconds at zero speed. * Activating the "First Start" does require that: • 9904 = 1 (VECTOR: SPEED), or 9904 = 3 (SCALAR: SPEED) and • 2101 = 3 (SCALAR FLYSTART) or 5 (FLYSTART + TORQ BOOST). **Note:** If you change motor parameters after running a Motor ID Run, repeat the Motor ID Run. 0 = NO ID RUN – Motor ID Run process is not running. 1 = ID RUN – Enables a Motor ID Run at the next start command. After run completion, this value automatically changes to 0.			To perform a Motor Id Run: 1. De-couple load from motor (or otherwise reduce load to near zero). 2. Verify that motor operation is safe: • The run automatically operates the motor in the forward direction – confirm that forward rotation is safe. • The run automatically operates the motor at 50…80% of nominal speed – confirm that operation at these speeds is safe. 3. Check following parameters (if changed from factory settings): • 2001 MINIMUM SPEED ≤ 0 • 2002 MAXIMUM SPEED > 80% of motor rated speed. • 2003 MAX CURRENT ≥ 130% of I_{2N} value. • The maximum torque (parameters 2014, 2017 and/or 2018) > 50%. 4. At the Control Panel, select: • Select Parameters • Select Group 99 • Select Parameter 9910	

Group 01: Operating Data

This group contains drive operating data, including actual signals. The drive sets the values for actual signals, based on measurements or calculations. You cannot set these values.

Group 01: Operating Data					
Code	**Description**	**Range**	**Resolution**	**Default**	**S**
0102	**SPEED** The calculated speed of the motor (rpm).	**0…30000 rpm**	**1 rpm**	**-**	
0103	**OUTPUT FREQ** The frequency (Hz) applied to the motor. (Also shown by default in OUTPUT display.)	**0.0…500.0 Hz**	**0.1 Hz**	**-**	
0104	**CURRENT** The motor current, as measured by the ACH550. (Also shown by default in OUTPUT display.)	**0.0…1.5*I_{2N}**	**0.1 A**	**-**	
0105	**TORQUE** Output torque. Calculated value of torque on motor shaft in % of motor nominal torque.	**-200%…200%**	**0.1%**	**-**	
0106	**POWER** The measured motor power in kW.	**-1.5…1.5*P_N**	**0.1 kW**	**-**	
0107	**DC BUS VOLTAGE** The DC bus voltage in VDC, as measured by the ACH550.	**0 V…2.5*V_{dN}**	**1 V**	**-**	
0109	**OUTPUT VOLTAGE** The voltage applied to the motor.	**0 V…2.0*V_{dN}**	**1 V**	**-**	
0110	**DRIVE TEMP** The temperature of the drive power transistors in Centigrade.	**0 °C…150 °C**	**0.1 °C**	**-**	
0111	**EXTERNAL REF 1** External reference, REF1, in rpm or Hz – units determined by parameter 9904.	**0…30000 rpm / 0…500 Hz**	**1 rpm / 0.1 Hz**	**-**	
0112	**EXTERNAL REF 2** External reference, REF2, in %.	**0%…100% (torque: 0%…600%)**	**0.1%**	**-**	
0113	**CTRL LOCATION** Active control location. Alternatives are: 0 = HAND 1 = EXT1 2 = EXT2	**0…2**	**1**	**-**	
0114	**RUN TIME (R)** The drive's accumulated running time in hours (h). • Can be **reset** by pressing UP and DOWN buttons simultaneously when in parameter set mode.	**0…9999 h**	**1 h**	**0 h**	
0115	**KWH COUNTER (R)** The drive's accumulated power consumption in kilowatt hours. • Can be **reset** by pressing UP and DOWN buttons simultaneously when in parameter set mode.	**0…9999 kWh**	**1 kWh**	**-**	
0116	**APPL BLK OUTPUT** Application block output signal. Value is from either: • PFA control, if PFA Control is active, or • Parameter 0112 EXTERNAL REF 2.	**0…100% (torque: 0…600%)**	**0.1%**	**-**	

Group 01: Operating Data					
Code	**Description**	**Range**	**Resolution**	**Default**	**S**
0118	**DI1-3 STATUS** Status of the three digital inputs. • Status is displayed as a binary number. • 1 indicates that the input is activated. • 0 indicates that the input is deactivated.	**000…111** **(0…7 decimal)**	**1**	**-**	
0119	**DI4-6 STATUS** Status of the three digital inputs. • See parameter 0118 DI1-3 STATUS.	**000…111** **(0…7 decimal)**	**1**	**-**	
0120	**AI1** Relative value of analog input 1 in %.	**0…100%**	**0.1%**	**-**	
0121	**AI2** The relative value of analog input 2 in %.	**0…100%**	**0.1%**	**-**	
0122	**RO1-3 STATUS** Status of the three relay outputs. • 1 indicates that the relay is energized. • 0 indicates that the relay is de-energized.	**0…111** **(0…7 decimal)**	**1**	**-**	
0123	**RO4-6 STATUS** Status of the three relay outputs. See parameter 0122.	**0…111** **(0…7decimal)**	**1**	**-**	
0124	**AO1** The analog output 1 value in milliamperes.	**0…20 mA**	**0.1 mA**	**-**	
0125	**AO2** The analog output 2 value in milliamperes.	**0…20 mA**	**0.1 mA**	**-**	
0126	**PID 1 OUTPPUT** The PID Controller 1 output value in %.	**-1000…1000%**	**0.1%**	**-**	
0127	**PID 2 OUTPUT** The PID Controller 2 output value in %.	**-100…100%**	**0.1%**	**-**	
0128	**PID 1 SETPNT** The PID 1 controller setpoint signal. • Units and scale defined by PID parameters 4006/4106 & 4007/4107.	**-**	**-**	**-**	
0129	**PID 2 SETPNT** The PID 2 controller setpoint signal. • Units and scale defined by PID parameters 4206 & 4207.	**-**	**-**	**-**	
0130	**PID 1 FBK** The PID 1 controller feedback signal. • Units and scale defined by PID parameters 4006/4106 & 4007/4107.	**-**	**-**	**-**	

Group 01: Operating Data					
Code	**Description**	**Range**	**Resolution**	**Default**	**S**
0131	**PID 2 FBK** The PID 2 controller feedback signal. • Units and scale defined by PID parameters 4206 & 4207.	**-**	**-**	**-**	
0132	**PID 1 DEVIATION** The difference between the PID 1 controller reference value and actual value. • Units and scale defined by PID parameters 4006/4106 & 4007/4107.	**-**	**-**	**-**	
0133	**PID 2 DEVIATION** The difference between the PID 2 controller reference value and actual value. • Units and scale defined by PID parameters 4206 & 4207.	**-**	**-**	**-**	
0134	**COMM RO WORD** Free data location that can be written from serial link. • Used for relay output control. • See parameter 1401.	**0…65535**	**1**	**0**	
0135	**COMM VALUE 1** Free data location that can be written from serial link.	**-32768…+32767**	**1**	**0**	
0136	**COMM VALUE 2** Free data location that can be written from serial link.	**-32768…+32767**	**1**	**0**	
0137	**PROCESS VAR 1** Process variable 1 • Defined by parameters in Group 34: Panel Display / Process Variables.	**-**	**1**		
0138	**PROCESS VAR 2** Process variable 2 • Defined by parameters in Group 34: Panel Display / Process Variables.	**-**	**1**		
0139	**PROCESS VAR 3** Process variable 3 • Defined by parameters in Group 34: Panel Display / Process Variables.	**-**	**1**		
0140	**RUN TIME** The drive's accumulated running time in thousands of hours (kh).	**0…499.99 kh**	**0.01 kh**	**0 kh**	
0141	**MWH COUNTER** The drive's accumulated power consumption in megawatt hours. Can not be reset.	**0…9999 MWh**	**1 MWh**	**-**	
0142	**REVOLUTION CNTR** The motor's accumulated revolutions in millions of revolutions.	**0…9999**	**1**	**0**	
0143	**DRIVE ON TIME (HI)** The drive's accumulated power on time in days.	**0…65535 days**	**1 day**	**0**	
0144	**DRIVE ON TIME (LO)** The drive's accumulated power on time in 2 second ticks (30 ticks = 60 seconds).	**0…43200hh:mm:ss**	**2 s**	**0**	
0145	**MOTOR TEMP** Motor temperature in degrees centigrade / PTC resistance in Ohms. • Applies only if motor temperature sensor is set up. See parameter 3501.	**-10...200 °C/** **0...5000 Ohm /** **0…1**	**1**	**0**	

Group 01: Operating Data					
Code	**Description**	**Range**	**Resolution**	**Default**	**S**
0146	**MECH ANGLE**	0…32767	1 (~0.01°)	0	
	Defines the motor shaft's angular position to about 0.01° (32,768 divisions for 360°). The position is defined as 0 at power up. During operation the zero position can be set by: • A Z-pulse input, if parameter 5010 Z PLS ENABLE = 1 (ENABLE) • Parameter 5011 POSITION RESET, if parameter 5010 Z PLS ENABLE = 2 (DISABLE) • Any status change of parameter 5002 ENCODER ENABLE				
0147	**MECH REVS**	-32767…32767	1	0	
	A signed integer that counts full revolutions of the motor shaft. The value: • Increments when parameter 0146 MECH ANGLE changes from 32767 to 0 • Decrements when parameter 0146 MECH ANGLE changes from 0 to 32767				
0148	**Z PLS DETECTED**	0, 1	1	0	
	When a Z-pulse defines the zero position, the shaft must pass through the zero position to trigger a Z-pulse. Until then, the shaft position is unknown (the drive uses the shaft position at power up as zero). This parameter signals when parameter 0146 MECH ANGLE is valid. This parameter starts at zero on power-up and changes to 1 only if: • Parameter 5010 Z PLS ENABLE = ENABLE and • An encoder Z-pulse has been detected.				

Group 03: Actual Signals

This group monitors fieldbus communications.

Group 03: Actual Signals					
Code	**Description**	**Range**	**Resolution**	**Default**	**S**
0301	**FB CMD WORD 1**	**-**	**-**	**-**	

Read-only copy of the Fieldbus Command Word 1.
- The fieldbus command is the principal means for controlling the drive from a fieldbus controller. The command consists of two Command Words. Bit-coded instructions in the Command Words switch the drive between states.
- To control the drive, using the Command Words, an external location (EXT1 or EXT2) must be active and set to COMM. (See parameters 1001 and 1002.)
- The control panel displays the word in hex. For example, all zeros and a 1 in Bit 0 displays as 0001. All zeros and a 1 in BIt 15 displays as 8000

Bit #	0301, FB CMD WORD 1	0302, FB CMD WORD 2
0	STOP	FBLOCAL_CTL
1	START	FBLOCAL_REF
2	REVERSE	START_DISABLE1
3	LOCAL	START_DISABLE2
4	RESET	Reserved
5	EXT2	Reserved
6	RUN_DISABLE	Reserved
7	STPMODE_R	Reserved
8	STPMODE_EM	Reserved
9	STPMODE_C	Reserved
10	RAMP_2	Reserved
11	RAMP_OUT_0	REF_CONST
12	RAMP_HOLD	REF_AVE
13	RAMP_IN_0	LINK_ON
14	RREQ_LOCALLOC	REQ_STARTINH
15	TORQLIM2	OFF_INTERLOCK

0302	**FB CMD WORD 2**	**-**	**-**	**-**	

Read-only copy of the Fieldbus Command Word 2.
- See parameter 0301.

Group 03: Actual Signals					
Code	**Description**	**Range**	**Resolution**	**Default**	**S**
0303	**FB STS WORD 1**	**-**	**1**	**- hex**	

Read-only copy of the Status Word 1.
- The drive sends status information to the fieldbus controller. The status consists of two Status Words.

Bit #	0303, STS CMD WORD 1	0304, FB STS WORD 2
0	READY	ALARM
1	ENABLED	REQ_MAINT
2	STARTED	DIRLOCK
3	RUNNING	LOCALLOCK
4	ZERO_SPEED	CTL_MODE
5	ACCELERATE	Reserved
6	DECELERATE	Reserved
7	AT_SETPOINT	Reserved
8	LIMIT	Reserved
9	SUPERVISION	Reserved
10	REV_REF	REQ_CTL
11	REV_ACT	REQ_REF1
12	PANEL_LOCAL	REQ_REF2
13	FIELDBUS_LOCAL	REQ_REF2EXT
14	EXT2_ACT	ACK_STARTINH
15	FAULT	ACK_OFF_ILCK

0304	**FB STS WORD 2**	**-**	**1**	**- hex**	

Read-only copy of the Status Word 2.
- See parameter 0303.

Group 03: Actual Signals					
Code	**Description**	**Range**	**Resolution**	**Default**	**S**
0305	**FAULT WORD 1**	**-**	**1**	**0000 hex**	

Read-only copy of the Fault Word 1.
- When a fault is active, the corresponding bit for the active fault is set in the Fault Words.
- Each fault has a dedicated bit allocated within Fault Words.
- See *"Fault Listing"* in section *"Diagnostics"* for a description of the faults.
- The control panel displays the word in hex. For example, all zeros and a 1 in Bit 0 displays a 0001. All zeros and a 1 in Bit 15 displays as 8000.

Bit #	0305, FAULT WORD 1	0306, FAULT WORD 2	0307, FAULT WORD 3
0	OVERCURRENT	UNDERLOAD	EFB 1
1	DC OVERVOLT	THERM FAIL	EFB 2
2	DEV OVERTEMP	OPEX LINK	EFB 3
3	SHORT CIRC	OPEX PWR	Incompatible software type
4	Reserved	CURR MEAS	Reserved
5	DC UNDERVOLT	SUPPLY PHASE	Reserved
6	AI1 LOSS	ENCODER ERROR	Reserved
7	AI2 LOSS	OVERSPEED	Reserved
8	MOT OVERTEMP	Reserved	Reserved
9	PANEL LOSS	DRIVE ID	Reserved
10	ID RUN FAIL	CONFIG FILE	System Error
11	MOTOR STALL	SERIAL 1 ERR	System Error
12	Reserved	EFB CON FILE	System Error
13	EXT FLT 1	FORCE TRIP	System Error
14	EXT FLT 2	MOTOR PHASE	Hardware Error
15	EARTH FAULT	OUTPUT WIRING	Param. Setting Fault

0306	**FAULT WORD 2**	**-**	**1**	**0000 hex**	

Read-only copy of the Fault Word 2.
- See parameter 0305.

0307	**FAULT WORD 3**	**-**	**1**	**0000 hex**	

Read-only copy of the Fault Word 3.
- See parameter 0305.

Group 03: Actual Signals					
Code	**Description**	**Range**	**Resolution**	**Default**	**S**
0308	**ALARM WORD 1**	**-**	**1**	**0000 hex**	

Read-only copy of the ALARM WORD 1.
- When a fault is active, the corresponding bit for the active fault is set in the Fault Words.
- Each fault has a dedicated bit allocated within Fault Words.
- Bits remain set until the whole alarm word is reset. (Reset by writing zero to the word).
- The control panel displays the word in hex. For example, all zeros and a 1 in Bit 0 displays a 0001. All zeros and a 1 in Bit 15 displays as 8000.

Bit #	0308, ALARM WORD 1	0309, ALARM WORD 2
0	OVERCURRENT	Reserved
1	OVERVOLTAGE	PID SLEEP
2	UNDERVOLTAGE	ID RUN
3	DIRLOCK	Reserved
4	I/O COMM	START ENABLE 1 MISSING
5	AI1 LOSS	START ENABLE 2 MISSING
6	AI2 LOSS	EMERGENCY STOP
7	PANEL LOSS	ENCODER ERROR
8	DEVICE OVERTEMP	FIRST START
9	MOT OVERTEMP	Reserved
10	UNDERLOAD	Reserved
11	MOTOR STALL	Reserved
12	AUTORESET	Reserved
13	PFA AUTOCHANGE	Reserved
14	PFC INTERLOCK	Reserved
15	Reserved	Reserved

0309	**ALARM WORD 2**	**-**	**1**	**0000 hex**	

Read-only copy of the ALARM WORD 3.
- See parameter 0308.

Group 04: Fault History

This group stores a recent history of the faults reported by the drive.

Group 04: Fault History					
Code	**Description**	**Range**	**Resolution**	**Default**	**S**
0401	**LAST FAULT** 0 = Clear the fault history (on panel = NO RECORD). n = Fault code of the last recorded fault.	**Fault code text**	**1**	**0**	
0402	**FAULT TIME 1** The day on which the last fault occurred. Either as: • A date – if real time clock is operating. • The number of days after power on – if real time clock is not used, or was not set.	**Date dd.mm.yy / power-on days**	**1**	**0**	
0403	**FAULT TIME 2** The time at which the last fault occurred. Either as: • Real time, in format hh:mm:ss – if real time clock is operating. • The time since power on (less the whole days reported in 0402), in format hh:mm:ss – if real time clock is not used, or was not set.	**Time hh:mm:ss**	**2 s**	**0**	
0404	**SPEED AT FLT** The motor speed (rpm) at the time the last fault occurred.	**-**	**1 rpm**	**0**	
0405	**FREQ AT FLT** The frequency (Hz) at the time the last fault occurred.	**-**	**0.1 Hz**	**0.0**	
0406	**VOLTAGE AT FLT** The DC bus voltage (V) at the time the last fault occurred.	**-**	**0.1 V**	**0.0**	
0407	**CURRENT AT FLT** The motor current (A) at the time the last fault occurred.	**-**	**0.1 A**	**0.0**	
0408	**TORQUE AT FLT** The motor torque (%) at the time the last fault occurred.	**-**	**0.1%**	**0.0**	
0409	**STATUS AT FLT** The drive status (hex code word) at the time the last fault occurred.	**-**	**1**	**0000 hex**	
0410	**DI 1-3 AT FLT** The status of digital inputs 1…3 at the time the last fault occurred.	**000…111 (0…7 decimal)**	**1**	**000 bin**	
0411	**DI 4-6 AT FLT** The status of digital inputs 4…6 at the time the last fault occurred.	**000…111 (0…7 decimal)**	**1**	**000 bin**	
0412	**PREVIOUS FAULT 1** Fault code of the second last fault. Read-only.	**Fault code text**	**1**	**0**	
0413	**PREVIOUS FAULT 2** Fault code of the third last fault. Read-only.	**Fault code text**	**1**	**0**	

Group 10: Start/Stop/Dir

This group:

- Defines external sources (EXT1, and EXT2) for commands that enable start, stop and direction changes.
- Locks direction or enables direction control. To select between the two external locations use the next group, parameter 1102.

Group 10: AcStart/Stop?Dir					
Code	**Description**	**Range**	**Resolution**	**Default**	**S**
1001	**EXT1 COMMANDS**	**0…14**	**1**	**1**	✓
	Defines external control location 1 (EXT1) – the configuration of start, stop and direction commands. 0 = NOT SEL – No external start, stop and direction command source. 1 = DI1 – Two-wire Start/Stop. • Start/Stop is through digital input DI1 (DI1 activated = Start; DI1 de-activated = Stop). • Parameter 1003 defines the direction. Selecting 1003 = 3 (request) is the same as 1003 = 1 (fwd). 2 = DI1, 2 – Two-wire Start/Stop, Direction. • Start/Stop is through digital input DI1 (DI1 activated = Start; DI1 de-activated = Stop). • Direction control (requires parameter 1003 = 3 (request)) is through digital input DI2 (DI2 activated = Reverse; de-activated = Forward). 3 = DI1P, 2P – Three-wire Start/Stop. • Start/Stop commands are through momentary push-buttons (the P stands for "pulse"). • Start is through a normally open push-button connected to digital input DI1. In order to start the drive, the digital input DI2 must be activated prior the pulse in DI1. • Connect multiple Start push-buttons in parallel. • Stop is through a normally closed push-button connected to digital input DI2. • Connect multiple Stop push-buttons in series. • Parameter 1003 defines the direction. Selecting 1003 = 3 (REQUEST) is the same as 1003 = 1 (FWD). 4 = DI1P, 2P, 3 – Three-wire Start/Stop, Direction. • Start/Stop commands are through momentary push-buttons, as described for DI1P, 2P. • Direction control (requires parameter 1003 = 3 (REQUEST)) is through digital input DI3 (DI3 activated = Reverse; de-activated = Forward). 5 = DI1P, 2P, 3P – Start Forward, Start Reverse, and Stop. • Start and Direction commands are given simultaneously with two separate momentary push-buttons (the P stands for "pulse"). • Start Forward command is through a normally open push-button connected to digital input DI1. In order to start the drive, the digital input DI3 must be activated during the pulse in DI1. • Start Reverse command is through a normally open push-button connected to digital input DI2. In order to start the drive, the digital input DI3 must be activated prior the pulse in DI2. • Connect multiple Start push-buttons in parallel. • Stop is through a normally closed push-button connected to digital input DI3. • Connect multiple Stop push-buttons in series. • Requires parameter 1003 = 3 (REQUEST). 6 = DI6 – Two-wire Start/Stop. • Start/Stop is through digital input DI6 (DI6 activated = Start; DI6 de-activated = Stop). • Parameter 1003 defines the direction. Selecting 1003 = 3 (REQUEST) is the same as 1003 = 1 (FWD). 7 = DI6, 5 – Two-wire Start/Stop/Direction. • Start/Stop is through digital input DI6 (DI6 activated = Start; DI6 de-activated = Stop). • Direction control (requires parameter 1003 = 3 (REQUEST)) is through digital input DI5. (DI5 activated = Reverse; de-activated = Forward). 8 = KEYPAD – Control Panel. • Start/Stop and Direction commands are through the control panel when EXT1 is active. • Direction control requires parameter 1003 = 3 (REQUEST). 9 = DI1F, 2R – Start/Stop/Direction commands through DI1 and DI2 combinations. • Start forward = DI1 activated and DI2 de-activated. • Start reverse = DI1 de-activated and DI2 activated. • Stop = both DI1 and DI2 activated, or both de-activated. • Requires parameter 1003 = 3 (REQUEST).				

Group 10: AcStart/Stop?Dir					
Code	**Description**	**Range**	**Resolution**	**Default**	**S**
	10 = COMM – Assigns the fieldbus Command Word as the source for the start/stop and direction commands. • Bits 0,1, 2 of Command Word 1 (parameter 0301) activates the start/stop and direction commands. • See Fieldbus user's manual for detailed instructions. 11 = TIMER 1. – Assigns Start/Stop control to Timer 1 (Timer activated = START; Timer de-activated = STOP). See Group 36, Timer Functions. 12…14 = TIMER 2… 4 – Assigns Start/Stop control to Timer 2…4. See Timer Function 1 above.				
1002	**EXT2 COMMANDS**	**0…14**	**1**	**1**	✓
	Defines external control location 2 (EXT2) – the configuration of start, stop and direction commands. • See parameter 1001 EXT1 COMMANDS above.				
1003	**DIRECTION**	**1…3**	**1**	**1**	✓
	Defines the control of motor rotation direction. 1 = FORWARD – Rotation is fixed in the forward direction. 2 = REVERSE – Rotation is fixed in the reverse direction. 3 = REQUEST – Rotation direction can be changed on command.				

Group 11: Reference Select

This group defines:

- How the drive selects between command sources.
- Characteristics and sources for REF1 and REF2.

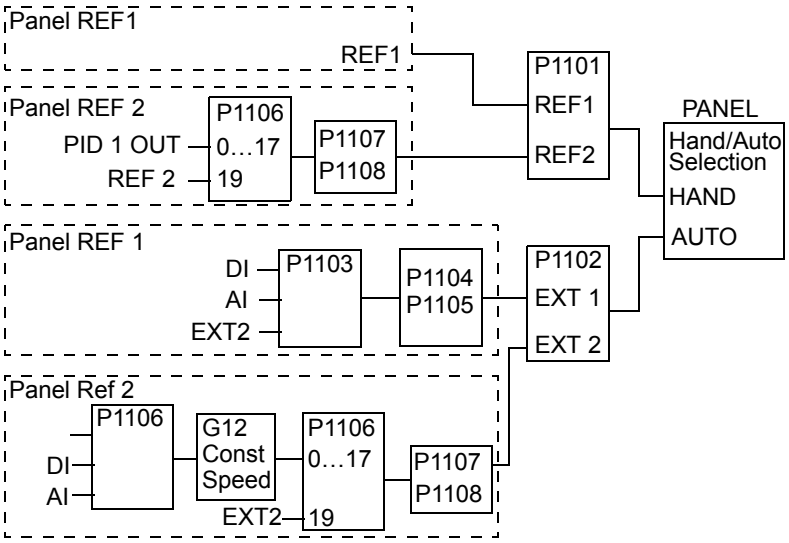

Group 11: Reference Select					
Code	**Description**	**Range**	**Resolution**	**Default**	**S**
1101	**KEYPAD REF SEL**	**1…2**	**1**	**1**	
	Selects the reference controlled in local control mode. 1 = REF1 (Hz/rpm) – Reference type depends on parameter 9904 MOTOR CTRL MODE. • Speed reference (rpm) if 9904 = 1 (VECTOR: SPEED). • Frequency reference (Hz) if 9904 = 3 (SCALAR; FREQ). 2 = REF2 (%)				
1102	**EXT1/EXT2 SEL**	**-6…12**	**1**	**0**	✓
	Defines the source for selecting between the two external control locations EXT1 or EXT2. Thus, defines the source for Start/Stop/Direction commands and reference signals. 0 = EXT1 – Selects external control location 1 (EXT1). • See parameter 1001 EXT1 COMMANDS for EXT1's Start/Stop/Dir definitions. • See parameter 1103 REF1 SELECT for EXT1's reference definitions. 1 = DI1 – Assigns control to EXT1 or EXT2 based on the state of DI1 (DI1 activated = EXT2; DI1 de-activated = EXT1). 2…6 = DI2…DI6 – Assigns control to EXT1 or EXT2 based on the state of the selected digital input. See DI1 above. 7 = EXT2 – Selects external control location 2 (EXT2). • See parameter 1002 EXT2 COMMANDS for EXT2's Start/Stop/Dir definitions. • See parameter 1106 REF2 SELECT for EXT2's reference definitions. 8 = COMM – Assigns control of the drive via external control location EXT1 or EXT2 based on the fieldbus control word. • Bit 5 of the Command Word 1 (parameter 0301) defines the active external control location (EXT1 or EXT2). • See Fieldbus user's manual for detailed instructions. 9 = TIMER 1 – Assigns control to EXT1 or EXT2 based on the state of the Timer (Timer activated = EXT2; Timer de-activated = EXT1). See Group 36, Timer Functions. 10…12 = TIMER 2… 4 – Assigns control to EXT1 or EXT2 based on the state of the Timer. See Timer 1 above. -1 = DI1(INV) – Assigns control to EXT1 or EXT2 based on the state of DI1 (DI1 activated = EXT1; DI1 de-activated = EXT2). -2…-6 = DI2(INV)…DI6(INV) – Assigns control to EXT1 or EXT2 based on the state of the selected digital input. See DI1(INV) above.				

Group 11: Reference Select					
Code	**Description**	**Range**	**Resolution**	**Default**	**S**
1103	**REF1 SELECT**	**0…17**	**1**	**1**	✓

Selects the signal source for external reference REF1.
0 = KEYPAD – Defines the control panel as the reference source.
1 = AI1 – Defines analog input 1 (AI1) as the reference source.
2 = AI2 – Defines analog input 2 (AI2) as the reference source.
3 = AI1/JOYST – Defines analog input 1 (AI1), configured for joystick operation, as the reference source.
- The minimum input signal runs the drive at the maximum reference in the reverse direction. Define the minimum using parameter 1104.
- The maximum input signal runs the drive at maximum reference in the forward direction. Define the maximum using parameter 1105.
- Requires parameter 1003=3 (request).

Warning! Because the low end of the reference range commands full reverse operation, do not use 0 V as the lower end of the reference range. Doing so means that if the control signal is lost (which is a 0 V input) the result is full reverse operation. Instead, use the following set-up so that loss of the analog input triggers a fault, stopping the drive:
- Set parameter 1301 MINIMUM AI1 (1304 MINIMUM AI2) at 20% (2 V or 4 mA).
- Set parameter 3021 AI1 FAULT LIMIT to a value 5% or higher.
- Set parameter 3001 AI<MIN FUNCTION to 1 (FAULT).

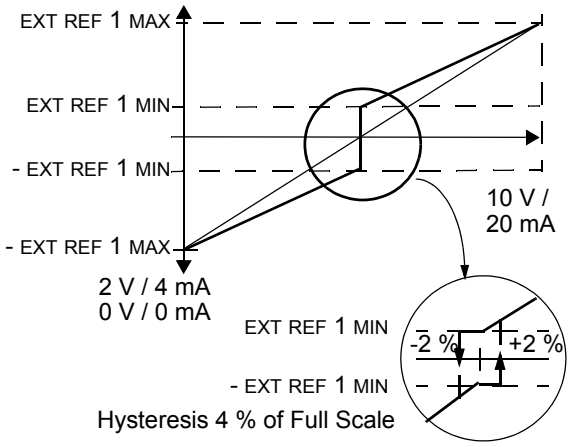

4 = AI2/JOYST – Defines analog input 2 (AI2), configured for joystick operation, as the reference source.
- See above (AI1/JOYST) description.

5 = DI3U,4D(R) – Defines digital inputs as the speed reference source (motor potentiometer control).
- Digital input DI3 increases the speed (the U stands for "up").
- Digital input DI4 decreases the speed (the D stands for "down").
- A Stop command resets the reference to zero (the R stands for "reset").
- Parameter 2205 ACCELER TIME 2 controls the reference signal's rate of change.

6 = DI3U,4D – Same as above (DI3U,4D(R)), except:
- A Stop command does not reset the reference to zero. The reference is stored.
- When the drive restarts, the motor ramps up (at the selected acceleration rate) to the stored reference.

7 = DI5U,6D – Same as above (DI3U,4D), except that DI5 and DI6 are the digital inputs used.
8 = COMM – Defines the fieldbus as the reference source.
9 = COMM+AI1 – Defines a fieldbus and analog input 1 (AI1) combination as the reference source. See Analog Input Reference Correction below.
10 = COMM*AI1 – Defines a fieldbus and analog input 1 (AI1) combination as the reference source. See Analog Input Reference Correction below.
11 = DI3U, 4D(RNC) – Same as DI3U,4D(R) above, except that:
- Changing the control source (EXT1 to EXT2, EXT2 to EXT1, LOC to REM) does not copy the reference.

12 = DI3U,4D(NC) – Same as DI3U,4D above, except that:
- Changing the control source (EXT1 to EXT2, EXT2 to EXT1, LOC to REM) does not copy the reference.

13 = DI5U,6D(NC) – Same as DI3U,4D above, except that:
- Changing the control source (EXT1 to EXT2, EXT2 to EXT1, LOC to REM) does not copy the reference.

14 = AI1+AI2 – Defines an analog input 1 (AI1) and analog input 2 (AI2) combination as the reference source. See Analog Input Reference Correction below.
15 = AI1*AI2 – Defines an analog input 1 (AI1) and analog input 2 (AI2) combination as the reference source. See Analog Input Reference Correction below.
16 = AI1-AI2 – Defines an analog input 1 (AI1) and analog input 2 (AI2) combination as the reference source. See Analog Input Reference Correction below.
17 = AI1/AI2 – Defines an analog input 1 (AI1) and analog input 2 (AI2) combination as the reference source. See Analog Input Reference Correction below.

Group 11: Reference Select					
Code	**Description**	**Range**	**Resolution**	**Default**	**S**

Analog Input Reference Correction

Parameter values 9, 10, and 14…17 use the formula in the following table.

Value Setting	AI reference is calculated as following:
C + B	C value + (B value - 50% of reference value)
C * B	C value * (B value / 50% of reference value)
C - B	(C value + 50% of reference value) - B value
C / B	(C value * 50% of reference value) / B value

Where:
- C = Main Reference value
  (= COMM for values 9, 10 and
  = AI1 for values 14…17).
- B = Correcting reference
  (= AI1 for values 9, 10 and
  = AI2 for values 14…17).

Example:

The figure shows the reference source curves for value settings 9, 10, and 14…17, where:
- C = 25%.
- P 4012 SETPOINT MIN = 0.
- P 4013 SETPOINT MAX = 0.
- B varies along the horizontal axis.

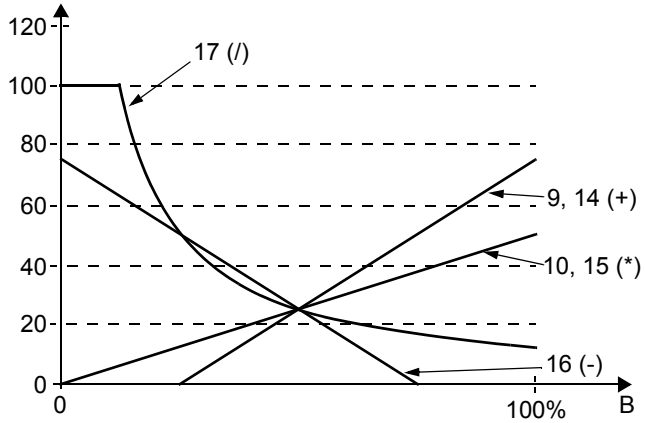

1104	**REF1 MIN**	**0.0…500.0 Hz** **0…30000 rpm**	**0.1 Hz** **1 rpm**	**0.0 Hz** **0 rpm**

Sets the minimum for external reference 1.
- The minimum analog input signal (as a percent of the full signal in volts or amps) corresponds to REF1 MIN in Hz/rpm.
- Parameter 1301 MINIMUM AI1 or 1304 MINIMUM AI2 sets the minimum analog input signal.
- These parameters (reference and analog min. and max. settings) provide scale and offset adjustment for the reference.

1105	**REF1 MAX**	**0.0…500.0 Hz** **0…30000 rpm**	**0.1 Hz** **1 rpm**	**60.0 Hz (US)** **1800 rpm (US)**

Sets the maximum for external reference 1.
- The maximum analog input signal (as a percent of full the signal in volts or amps) corresponds to REF1 MAX in Hz/rpm.
- Parameter 1302 MAXIMUM AI1 or 1305 MAXIMUM AI2 sets the maximum analog input signal.

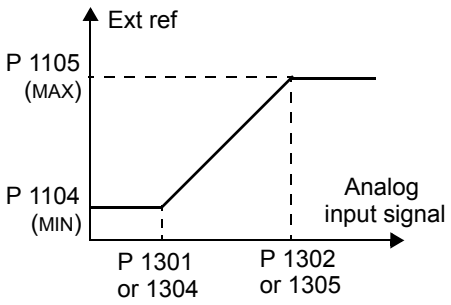

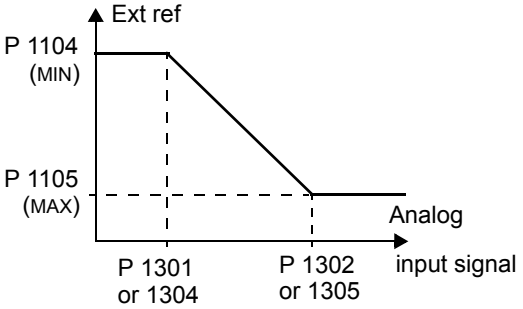

Group 11: Reference Select					
Code	**Description**	**Range**	**Resolution**	**Default**	**S**
1106	**REF2 SELECT** Selects the signal source for external reference REF2. 0…17 – Same as for parameter 1103 REF1 SELECT. 19 = PID1OUT – The reference is taken from the PID1 output. See Groups 40 and 41. 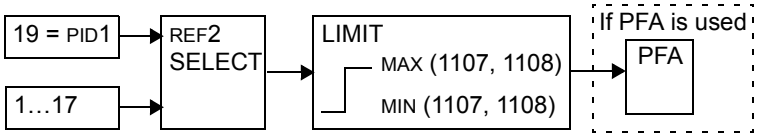 	**0…19**	**1**	**19**	✓
1107	**REF2 MIN** Sets the minimum for external reference 2. • The minimum analog input signal (in volts or amps) corresponds to REF2 MIN in %. • Parameter 1301 MINIMUM AI1 or 1304 MINIMUM AI2 sets the minimum analog input signal. • This parameter sets the minimum frequency reference. • The value is a percentage of the: – maximum frequency or speed – maximum process reference – nominal torque	**0.0…100.0%** **(torque: 0…600%)**	**0.1%**	**0.0%**	
1108	**REF2 MAX** Sets the maximum for external reference 2. • The maximum analog input signal (in volts or amps) corresponds to REF2 MAX in %. • Parameter 1302 MAXIMUM AI1 or 1305 MAXIMUM AI2 sets the maximum analog input signal. • This parameter sets the maximum frequency reference. • The value is a percentage of the: – maximum frequency or speed – maximum process reference – nominal torque	**0.0…100.0%** **(torque: 0…600%)**	**0.1%**	**100.0%**	

Group 12: Constant Speeds

This group defines a set of constant speeds. In general:

- You can program up to 7 constant speeds, ranging from 0…500 Hz or 0…30000 rpm.
- Values must be positive (No negative speed values for constant speeds).
- Constant speed selections are ignored if:
  - the torque control is active, or
  - the process PID reference is followed, or
  - the drive is in local control mode, or
  - PFA (Pump and Fan Alternation) is active

Note! Parameter 1208 CONST SPEED 7 acts also as a so-called fault speed which may be activated if the control signal is lost. For example, see parameters 3001 AI<MIN FUNCTION, 3002 PANEL COMM ERROR and 3018 COMM FAULT FUNC.

Group 12: Constant Speeds					
Code	**Description**	**Range**	**Resolution**	**Default**	**S**
1201	**CONST SPEED SEL**	**-14 …19**	**1**	3	✓

Defines the digital inputs used to select Constant Speeds. See general comments in the introduction.
0 = NOT SEL – Disables the constant speed function.
1 = DI1 – Selects Constant Speed 1 with digital input DI1.
• Digital input activated = Constant Speed 1 activated.
2…6 = DI2…DI6 – Selects Constant Speed 1 with digital input DI2…DI6. See above.
7 = DI1,2 – Selects one of three Constant Speeds (1…3) using DI1 and DI2.
• Uses two digital inputs, as defined below (0 = DI de-activated, 1 = DI activated):

DI1	DI2	Function
0	0	No constant speed
1	0	Constant speed 1 (1202)
0	1	Constant speed 2 (1203)
1	1	Constant speed 3 (1204)

• Can be set up as a so-called fault speed, which is activated if the control signal is lost. Refer to parameter 3001 AI<MIN function and parameter 3002 PANEL COMM ERR.

8 = DI2,3 – Selects one of three Constant Speeds (1…3) using DI2 and DI3.
• See above (DI1,2) for code.
9 = DI3,4 – Selects one of three Constant Speeds (1…3) using DI3 and DI4.
• See above (DI1,2) for code.
10 = DI4,5 – Selects one of three Constant Speeds (1…3) using DI4 and DI5.
• See above (DI1,2) for code.
11 = DI5,6 – Selects one of three Constant Speeds (1…3) using DI5 and DI6.
• See above (DI1,2) for code.

Group 12: Constant Speeds					
Code	**Description**	**Range**	**Resolution**	**Default**	**S**

12 = DI1,2,3 – Selects one of seven Constant Speeds (1…7) using DI1, DI2 and DI3.
- Uses three digital inputs, as defined below (0 = DI de-activated, 1 = DI activated):

DI1	DI2	DI3	Function
0	0	0	No constant speed
1	0	0	Constant speed 1 (1202)
0	1	0	Constant speed 2 (1203)
1	1	0	Constant speed 3 (1204)
0	0	1	Constant speed 4 (1205)
1	0	1	Constant speed 5 (1206)
0	1	1	Constant speed 6 (1207)
1	1	1	Constant speed 7 (1208)

13 = DI3,4,5 – Selects one of seven Constant Speeds (1…7) using DI3, DI4 and DI5.
- See above (DI1,2,3) for code.

14 = DI4,5,6 – Selects one of seven Constant Speeds (1…7) using DI5, DI6 and DI7.
- See above (DI1,2,3) for code.

15…18 = TIMER 1…4 – Specifies the timer used to select a Constant Speed as the reference. The reference selection depends on the state of the selected timer, and the value of 1209 TIMED MODE SEL. See table. To enable and set timers, see Group 36, Timer Functions.

1201 =	15	16	17	18	Reference	
Timer:	**1**	**2**	**3**	**4**	**1209 = 1**	**1209 = 2**
Timer State	0				External reference	Constant Speed 1
	1				Constant Speed 1	Constant Speed 2

15…18 = TIMER FUNCTION 1…4 – Selects Constant speed 1 when Timer Function is active. See Group 36, Timer Functions.

19 = TIMER 1 & 2 – Selects a constant depending on the state of Timers 1 & 2. See parameter 1209.

-1 = DI1(INV) – Selects Constant Speed 1 with digital input DI1.
- Inverse operation: Digital input de-activated = Constant Speed 1 activated.

-2…- 6 = DI2(INV)…DI6(INV) – Selects Constant Speed 1 with digital input. See above.

-7 = DI1,2(INV) – Selects one of three Constant Speeds (1…3) using DI1 and DI2.
- Inverse operation uses two digital inputs, as defined below (0 = DI de-activated, 1 = DI activated):

DI1	DI2	Function
1	1	No constant speed
0	1	Constant speed 1 (1202)
1	0	Constant speed 2 (1203)
0	0	Constant speed 3 (1204)

-8 = DI2,3(INV) – Selects one of three Constant Speeds (1…3) using Di2 and DI3.
- See above (DI1,2(INV)) for code.

-9 = DI3,4(INV) – Selects one of three Constant Speeds (1…3) using DI3 and DI4.
- See above (DI1,2(INV)) for code.

-10 = DI4,5(INV) – Selects one of three Constant Speeds (1…3) using DI4 and DI5.
- See above (DI1,2(INV)) for code.

-11 = DI5,6(INV) – Selects one of three Constant Speeds (1…3) using DI5 and DI6.
- See above (DI1,2(INV)) for code.

Group 12: Constant Speeds

Code	Description	Range	Resolution	Default	S
	-12 = DI1,2,3(INV) – Selects one of seven Constant Speeds (1…7) using DI1, DI2 and DI3. • Inverse operation uses three digital inputs, as defined below (0 = DI de-activated, 1 = DI activated):				

DI1	DI2	DI3	Function
1	1	1	No constant speed
0	1	1	Constant speed 1 (1202)
1	0	1	Constant speed 2 (1203)
0	0	1	Constant speed 3 (1204)
1	1	0	Constant speed 4 (1205)
0	1	0	Constant speed 5 (1206)
1	0	0	Constant speed 6 (1207)
0	0	0	Constant speed 7 (1208)

-13 = DI3,4,5(INV) – Selects one of seven Constant Speeds (1…3) using DI3, DI4 and DI5.
• See above (DI1,2,3(INV)) for code.
-14 = DI4,5,6(INV) – Selects one of seven Constant Speeds (1…3) using DI4, DI5 and DI6.
• See above (DI1,2,3(INV)) for code.

Code	Description	Range	Resolution	Default	S
1202	**CONST SPEED 1**	**0…30000 rpm / 0.0…500.0 Hz**	**1 rpm / 0.1 Hz**	**360 (US)/ 6.0 (US)**	
	Sets value for Constant Speed 1. • The range and units depend on parameter 9904 MOTOR CTRL MODE. • Range: 0…30000 rpm when 9904 = 1 (VECTOR: SPEED). • Range: 0…500 Hz when 9904 = 3 (SCALAR: FREQ).				
1203	**CONST SPEED 2**	**0…30000 rpm / 0.0…500.0 Hz**	**1 rpm / 0.1 Hz**	**360 (US)/ 12.0 (US)**	
	Sets a value for a Constant Speed. (See CONST SPEED 1 above.)				
1204	**CONST SPEED 3**	**0…30000 rpm / 0.0…500.0 Hz**	**1 rpm / 0.1 Hz**	**720 (US)/ 18.0 (US)**	
1205	**CONST SPEED 3**	**0…30000 rpm / 0.0…500.0 Hz**	**1 rpm / 0.1 Hz**	**1080 (US)/ 18.0 (US)**	
	Sets a value for a Constant Speed. (See CONST SPEED 1 above.)				
1206	**CONST SPEED 3**	**0…30000 rpm / 0.0…500.0 Hz**	**1 rpm / 0.1 Hz**	**1440 (US)/ 24.0 (US)**	
	Sets a value for a Constant Speed. (See CONST SPEED 1 above.)				
1207	**CONST SPEED 3**	**0…30000 rpm / 0.0…500.0 Hz**	**1 rpm / 0.1 Hz**	**1800 (US)/ 30.0 (US)**	
	Sets a value for a Constant Speed. (See CONST SPEED 1 above.)				
1208	**CONST SPEED 3**	**0…30000 rpm / 0.0…500.0 Hz**	**1 rpm / 0.1 Hz**	**2880 (US)/ 48.0 (US)**	
	Sets a value for a Constant Speed. (See CONST SPEED 1 above.)				

Group 12: Constant Speeds					
Code	**Description**	**Range**	**Resolution**	**Default**	**S**
1209	**TIMED MODE SEL**	**1…2**	**1**	**2**	✓

Defines timer activated, constant speed mode. Timer can be used to change between external reference and a maximum of three constant speeds, or to change between a maximum of 4 selectable speeds, i.e. constant speeds 1,2,3 and 4.

1 = EXT/CS1/2/3 – Selects an external speed when no timer is active, selects Constant speed 1 when Timer 1 is active, Selects Constant speed 2 when Timer 2 is active and selects Constant speed 3 when both Timers 1 and 2 are active.

TIMER1	TIMER2	Function
0	0	External reference
1	0	Constant speed 1 (1202)
0	1	Constant speed 2 (1203)
1	1	Constant speed 3 (1204)

2 = CS1/2/3/4 – Selects Constant speed 1 when no timer is active, selects Constant speed 2 when Timer 1 is active, selects Constant speed 3 when Timer 2 is active, selects Constant speed 4 when both timers are active.

TIMER1	TIMER2	Function
0	0	Constant speed 1 (1202)
1	0	Constant speed 2 (1203)
0	1	Constant speed 3 (1204)
1	1	Constant speed 4 (1205)

Group 13: Analog Inputs

This group defines the limits and the filtering for analog inputs.

Group 13: Analog Inputs					
Code	**Description**	**Range**	**Resolution**	**Default**	**S**
1301	**MINIMUM AI1**	**0.0…100.0%**	**0.1%**	**20.0%**	
	Defines the minimum value of the analog input. • Define value as a percent of the full analog signal range. See example below. • The minimum analog input signal corresponds to 1104 REF1 MIN or 1107 REF2 MIN. • MINIMUM AI cannot be greater than MAXIMUM AI. • These parameters (reference and analog min. and max. settings) provide scale and offset adjustment for the reference. • See figure at parameter 1104. **Example.** To set the minimum analog input value to 4 mA: • Configure the analog input for 0…20 mA current signal. • Calculate the minimum (4 mA) as a percent of full range (20 mA) = 4 mA / 20 mA * 100% = 20%				
1302	**MAXIMUM AI1**	**0.0…100.0%**	**0.1%**	**100.0%**	
	Defines the maximum value of the analog input. • Define value as a percent of the full analog signal range. • The maximum analog input signal corresponds to 1105 REF1 MAX or 1108 REF2 MAX. • See figure at parameter 1104.				
1303	**FILTER AI1**	**0.0…10.0 s**	**0.1 s**	**0.1 s**	
	Defines the filter time constant for analog input 1 (AI1). • The filtered signal reaches 63% of a step change within the time specified. 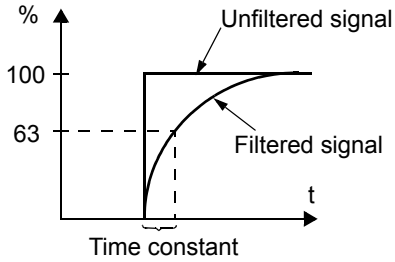 				
1304	**MINIMUM AI2**	**0.0…100.0%**	**0.1%**	**20.0%**	
	Defines the minimum value of the analog input. • See MINIMUM AI1 above.				
1305	**MAXIMUM AI2**	**0.0…100.0%**	**0.1%**	**100.0%**	
	Defines the maximum value of the analog input. • See MAXIMUM AI1 above.				
1306	**FILTER AI2**	**0.0…10.0 s**	**0.1 s**	**0.1 s**	
	Defines the filter time constant for analog input 2 (AI2). • See FILTER AI1 above.				

Group 14: Relay Outputs

This group defines the condition that activates each of the relay outputs.

Group 14: Relay Outputs					
Code	**Description**	**Range**	**Resolution**	**Default**	**S**
1401	**RELAY OUTPUT 1**	**0…45**	**1**	**1**	
	Defines the event or condition that activates relay 1 – what relay output 1 means. 0 = NOT SEL – Relay is not used and is de-energized. 1 = READY – Energize relay when drive is ready to function. Requires: • Run enable signal present. • No faults exist. • Supply voltage is within range. • Emergency Stop command is not on. 2 = RUN – Energize relay when the drive is running. 3 = FAULT (-1) – Energize relay when power is applied. De-energizes when a fault occurs. 4 = FAULT – Energize relay when a fault is active. 5 = ALARM – Energize relay when an alarm is active. 6 = REVERSED – Energize relay when motor rotates in reverse direction. 7 = STARTED – Energize relay when drive receives a start command (even if Run Enable signal is not present). De-energized relay when drive receives a stop command or a fault occurs. 8 = SUPRV1 OVER – Energize relay when first supervised parameter (3201) exceeds the limit (3203). • See "Group 32: Supervision" starting on page 111. 9 = suprv1 under – Energize relay when first supervised parameter (3201) drops below the limit (3202). • See "Group 32: Supervision" starting on page 111. 10 = suprv2 over – Energize relay when second supervised parameter (3204) exceeds the limit (3206). • See "Group 32: Supervision" starting on page 111. 11 = suprv2 under – Energize relay when second supervised parameter (3204) drops below the limit (3205). • See "Group 32: Supervision" starting on page 111. 12 = suprv3 over – Energize relay when third supervised parameter (3207) exceeds the limit (3209). • See "Group 32: Supervision" starting on page 111. 13 = suprv3 under – Energize relay when third supervised parameter (3207) drops below the limit (3208). • See "Group 32: Supervision" starting on page 111. 14 = AT SET POINT – Energize relay when the output frequency is equal to the reference frequency. 15 = FAULT (RST) – Energize relay when the drive is in a fault condition and will reset after the programmed auto-reset delay. • See parameter 3103 delay time. 16 = FLT/ALARM – Energize relay when fault or alarm occurs. 17 = EXT CTRL – Energize relay when external control is selected. 18 = REF 2 SEL – Energize relay when EXT2 is selected. 19 = CONST FREQ – Energize relay when a constant speed is selected. 20 = REF LOSS – Energize relay when reference or active control place is lost. 21 = OVERCURRENT – Energize relay when an overcurrent alarm or fault occurs. 22 = OVERVOLTAGE – Energize relay when an overvoltage alarm or fault occurs. 23 = DRIVE TEMP – Energize relay when a drive overtemperature alarm or fault occurs. 24 = UNDERVOLTAGE – Energize relay when an undervoltage alarm or fault occurs. 25 = AI1 LOSS – Energize relay when AI1 signal is lost. 26 = AI2 LOSS – Energize relay when AI2 signal is lost. 27 = MOTOR TEMP – Energize relay when a motor overtemperature alarm or fault occurs. 28 = STALL – Energize relay when a stall alarm or fault exists. 29 = UNDERLOAD – Energize relay when an underload alarm or fault occurs. 30 = PID SLEEP – Energize relay when the PID sleep function is active. 31 = PFA – Use relay to start/stop motor in PFA control (See Group 81: PFA Control). • Use this option only when PFA control is used. • Selection activated / deactivated when drive is not running. 32 = AUTOCHANGE – Energize relay when PFA autochange operation is performed. • Use this option only when PFA control is used. 33 = FLUX READY – Energize relay when the motor is magnetized and able to supply nominal torque (motor has reached nominal magnetizing). 34 = USER S2 – Energize relay when User Parameter Set 2 is active.				

Group 14: Relay Outputs

Code	Description	Range	Resolution	Default	S

35 = COMM – Energize relay based on input from fieldbus communication.
- Fieldbus writes binary code in parameter 0134 that can energizes relay 1…relay 6 according to the following:

Par. 0134	Binary	RO6	RO5	RO4	RO3	RO2	RO1
0	000000	0	0	0	0	0	0
1	000001	0	0	0	0	0	1
2	000010	0	0	0	0	1	0
3	000011	0	0	0	0	1	1
4	000100	0	0	0	1	0	0
5…62	…	…	…	…	…	…	…
63	111111	1	1	1	1	1	1

- 0 = De-energize relay, 1 = Energize relay.

36 = COMM(-1) – Energize relay based on input from fieldbus communication.
- Fieldbus writes binary code in parameter 0134 that can energizes relay 1…relay 6 according to the following:

Par. 0134	Binary	RO6	RO5	RO4	RO3	RO2	RO1
0	000000	1	1	1	1	1	1
1	000001	1	1	1	1	1	0
2	000010	1	1	1	1	0	1
3	000011	1	1	1	1	0	0
4	000100	1	1	1	0	1	1
5…62	…	…	…	…	…	…	…
63	111111	0	0	0	0	0	0

- 0 = De-energize relay, 1 = Energize relay.

37 = TIMER 1 – Energize relay when timer 1 is activated. See Group 36, Timer Functions.

38…40 = TIMER 2…4 – Energize relay when Timer 2…4 is active. See Timer 1 above.

41 = M.TRIG FAN – Energize relay when cooling fan counter is triggered. See group 29, Maintenance Trig.
42 = M.TRIG REV – Energize relay when revolutions counter is triggered. See group 29, Maintenance Trig.
43 = M. TRIG RUN – Energize relay when run time counter is triggered. See group 29, Maintenance Trig.
44 = M.TRIG MWH – Energize relay when power consumption counter is triggered. See group 29, Maintenance Trig.
45 = OVERRIDE – Energize relay when override is activated.

Code	Description	Range	Resolution	Default	S
1402	**RELAY OUTPUT 2**	**0…45**	**1**	**2**	

Defines the event or condition that activates relay 2 – what relay output 2 means.
- See 1401 RELAY OUTPUT 1.

Code	Description	Range	Resolution	Default	S
1403	**RELAY OUTPUT 3**	**0…45**	**1**	**3**	

Defines the event or condition that activates relay 3 – what relay output 3 means.
- See 1401 RELAY OUTPUT 1.

Code	Description	Range	Resolution	Default	S
1404	**RO 1 ON DELAY**	**0.0…3600.0 s**	**0.1 s**	**0.0 s**	

Defines the switch-on delay for relay 1.
- On / off delays are ignored when relay output 1401 is set to PFA.

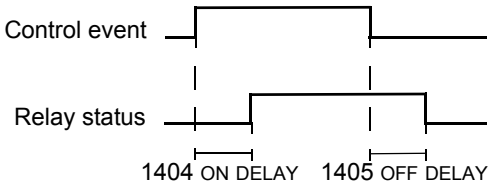

Code	Description	Range	Resolution	Default	S
1405	**RO 1 OFF DELAY**	**0.0…3600.0 s**	**0.1 s**	**0.0 s**	

Defines the switch-off delay for relay 1.
- On / off delays are ignored when relay output 1401 is set to PFA.

Code	Description	Range	Resolution	Default	S
1406	**RO 2 ON DELAY**	**0.0…3600.0 s**	**0.1 s**	**0.0 s**	

Defines the switch-on delay for relay 2.
- See RO 1 ON DELAY.

Group 14: Relay Outputs					
Code	**Description**	**Range**	**Resolution**	**Default**	**S**
1407	**RO 2 OFF DELAY** Defines the switch-off delay for relay 2. • See RO 1 OFF DELAY.	**0.0…3600.0 s**	**0.1 s**	**0.0 s**	
1408	**RO 3 ON DELAY** Defines the switch-on delay for relay 3. • See RO 1 ON DELAY.	**0.0…3600.0 s**	**0.1 s**	**0.0 s**	
1409	**RO 3 OFF DELAY** Switch-off delay for relay 3. • See RO 1 OFF DELAY.	**0.0…3600.0 s**	**0.1 s**	**0.0 s**	
1410…1412	**RELAY OUTPUT 4…6** Defines the event or condition that activates relay 4…6 – what relay output 4…6 means. • See 1401 RELAY OUTPUT 1.	**0…45**	**1**	**0**	
1413	**RO 4 ON DELAY** Defines the switch-on delay for relay 4. • See RO 1 ON DELAY.	**0.0…3600.0 s**	**0.1 s**	**0.0 s**	
1414	**RO 4 OFF DELAY** Defines the switch-off delay for relay 4. • See RO 1 OFF DELAY.	**0.0…3600.0 s**	**0.1 s**	**0.0 s**	
1415	**RO 5 ON DELAY** Defines the switch-on delay for relay 5. • See RO 1 ON DELAY.	**0.0…3600.0 s**	**0.1 s**	**0.0 s**	
1416	**RO 5 OFF DELAY** Defines the switch-off delay for relay 5. • See RO 1 OFF DELAY.	**0.0…3600.0 s**	**0.1 s**	**0.0 s**	
1417	**RO 6 ON DELAY** Defines the switch-on delay for relay 6. • See RO 1 ON DELAY.	**0.0…3600.0 s**	**0.1 s**	**0.0 s**	
1418	**RO 6 OFF DELAY** Defines the switch-off delay for relay 6. • See RO 1 OFF DELAY.	**0.0…3600.0 s**	**0.1 s**	**0.0 s**	

Group 15: Analog Outputs

This group defines the drive's analog (current signal) outputs. The drive's analog outputs can be:

- Any parameter of the Operating Data group (Group 01).
- Limited to programmable minimum and maximum values of output current.
- Scaled (and/or inverted) by defining the minimum and maximum values of the source parameter (or content). Defining an maximum value (parameter 1503 or 1509) that is less than the content minimum value (parameter 1502 or 1508) results in an inverted output.
- Filtered

Group 15: Analog Outputs					
Code	**Description**	**Range**	**Resolution**	**Default**	**S**
1501	**AO1 CONTENT SEL** Defines the content for analog output AO1. 99 = EXCITE PTC – Provides a current source for sensor type PTC. Output = 1.6 mA. See Group 35. 100 = EXCITE PT100 – Provides a current source for sensor type Pt100. Output = 9.1 mA. See Group 35. 101…145 – Output corresponds to a parameter in the Operating Data group (Group 01). • Parameter defined by value (value 102 = parameter 0102) 146…199 – Not assigned. 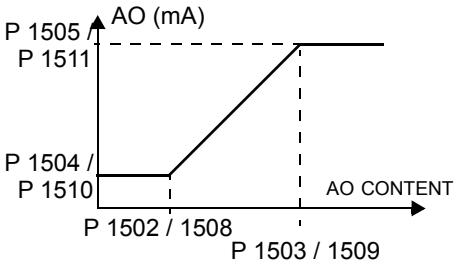 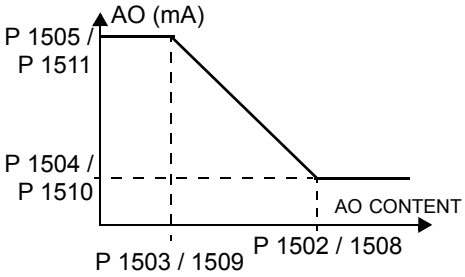	**99…199**	**1**	**103**	
1502	**AO1 CONTENT MIN** Sets the minimum content value. • Content is the parameter selected by parameter 1501. • Minimum value refers to the minimum content value that will be converted to an analog output. • These parameters (content and current min. and max. settings) provide scale and offset adjustment for the output. See figure.	**Depends on selection**	-	0.0 Hz	
1503	**AO1 CONTENT MAX** Sets the maximum content value • Content is the parameter selected by parameter 1501. • Maximum value refers to the maximum content value that will be converted to an analog output.	**Depends on selection**	-	60.0 Hz	
1504	**MINIMUM AO1** Sets the minimum output current.	**0.0…20.0 mA**	**0.1 mA**	**4.0 mA**	
1505	**MAXIMUM AO1** Sets the maximum output current.	**0.0…20.0 mA**	**0.1 mA**	**20.0 mA**	

Group 15: Analog Outputs					
Code	**Description**	**Range**	**Resolution**	**Default**	**S**
1506	**FILTER AO1** Defines the filter time constant for AO1. • The filtered signal reaches 63% of a step change within the time specified. • See figure in parameter 1303.	**0…10 s**	**0.1 s**	**0.1 s**	
1507	**AO2 CONTENT SEL** Defines the content for analog output AO2. See AO1 CONTENT above.	**99…199**	**1**	**104**	
1508	**AO2 CONTENT MIN** Sets the minimum content value. See AO1CONTENT MIN above.	**Depends on selection**	-	**0.0 A**	
1509	**AO2 CONTENT MAX** Sets the maximum content value. See AO1 CONTENT MAX above.	**Depends on selection**	-	**4.6 A**	
1510	**MINIMUM AO2** Sets the minimum output current. See MINIMUM AO1 above.	**0**.0**…20.0 mA**	**0.1 mA**	**4.0 mA**	
1511	**MAXIMUM AO2** Sets the maximum output current. See MAXIMUM AO1 above.	**0**.0**…20.0 mA**	**0.1 mA**	**20.0 mA**	
1512	**FILTER AO2** Defines the filter time constant for AO2. See FILTER AO1 above.	**0**.0**…10**.0 **s**	**0.1 s**	**0.1 s**	

Group 16: System Controls

This group defines a variety of system level locks, resets and enables.

Group 16: System Controls					
Code	**Description**	**Range**	**Resolution**	**Default**	**S**
1601	**RUN ENABLE**	**-6…7**	**1**	**0**	✓
	Selects the source of the run enable signal. 0 = NOT SEL – Allows the drive to start without an external run enable signal. 1 = DI1 – Defines digital input DI1 as the run enable signal. • This digital input must be activated for run enable. • If the voltage drops and de-activates this digital input, the drive will coast to stop and not start until the run enable signal resumes. 2…6 = DI2…DI6 – Defines digital input DI2…DI6 as the run enable signal. • See DI1 above. 7 = COMM – Assigns the fieldbus Command Word as the source for the run enable signal. • Bit 6 of the Command Word 1 (parameter 0301) activates the run disable signal. • See fieldbus user's manual for detailed instructions. -1 = DI1(INV) – Defines an inverted digital input DI1 as the run enable signal. • This digital input must be de-activated for run enable. • If this digital input activates, the drive will coast to stop and not start until the run enable signal resumes. -2…-6 = DI2(INV)…DI6(INV) – Defines an inverted digital input DI2…DI6 as the run enable signal. • See DI1(INV) above.				
1602	**PARAMETER LOCK**	**0…2**	**1**	**1**	
	Determines if the control panel can change parameter values. • This lock does not limit parameter changes made by macros. • This lock does not limit parameter changes written by fieldbus inputs. • This parameter value can be changed only if the correct pass code is entered. See parameter 1603, PASS CODE. 0 = LOCKED – You cannot use the control panel to change parameter values. • The lock can be opened by entering the valid pass code to parameter 1603. 1 = OPEN – You can use the control panel to change parameter values. 2 = NOT SAVED – You can use the control panel to change parameter values, but they are not stored in permanent memory. • Set parameter 1607 PARAM SAVE to 1 (SAVE) to store changed parameter values to memory.				
1603	**PASS CODE**	**0…65535**	**1**	**0**	
	Entering the correct pass code allows you to change the parameter lock. • See parameter 1602 above. • The code 358 allows you to change the value of the parameter 1602 once. • This entry reverts back to 0 automatically.				
1604	**FAULT RESET SEL**	**-6…8**	**1**	**0**	
	Selects the source for the fault reset signal. The signal resets the drive after a fault trip if the cause of the fault no longer exists. 0 = KEYPAD – Defines the control panel as the only fault reset source. • Fault reset is always possible with control panel. 1 = DI1 – Defines digital input DI1 as a fault reset source. • Activating the digital input resets the drive. 2…6 = DI2…DI6 – Defines digital input DI2…DI6 as a fault reset source. • See DI1 above. 7 = START/STOP – Defines the Stop command as a fault reset source. • Do not use this option when fielbus communication provides the start, stop and direction commands. 8 = COMM – Defines the fieldbus as a fault reset source. • The Command Word is supplied through fieldbus communication. • The bit 4 of the Command Word 1 (parameter 0301) resets the drive. -1 = DI1(INV) – Defines an inverted digital input DI1 as a fault reset source. • De-activating the digital input resets the drive. -2…-6 = DI2(INV)…DI6(INV) – Defines an inverted digital input DI2…DI6 as a fault reset source. • See DI1(INV) above.				

Group 16: System Controls					
Code	**Description**	**Range**	**Resolution**	**Default**	**S**
1605	**USER PAR SET CHG**	**-6…6**	**1**	**0**	
	Defines control for changing the user parameter set. • See parameter 9902 (APPLIC MACRO). • The drive must be stopped to change User Parameter Sets. • During a change, the drive will not start. **Note:** Always save the User Parameter Set after changing any parameter settings, or performing a motor identification. • Whenever the power is cycled, or parameter 9902 (APPLIC MACRO) is changed, the drive loads the last settings saved. Any unsaved changes to a user parameter set are lost. **Note:** The value of this parameter (1605) is not included in the User Parameter Sets, and does not change if User Parameter Sets change. **Note:** You can use a relay output to supervise the selection of User Parameter Set 2. • See parameter 1401. 0 = NOT SEL – Defines the control panel (using parameter 9902) as the only control for changing User Parameter Sets. 1 = DI1 – Defines digital input DI1 as a control for changing User Parameter Sets. • The drive loads User Parameter Set 1 on the falling edge of the digital input. • The drive loads User Parameter Set 2 on the rising edge of the digital input. • The User Parameter Set changes only when the drive is stopped. 2…6 = DI2…DI6 – Defines digital input DI2…DI6 as a control for changing User Parameter Sets. • See DI1 above. -1 = DI1(INV) – Defines an inverted digital input DI1 as a control for changing User Parameter Sets. • The drive loads User Parameter Set 1 on the rising edge of the digital input. • The drive loads User Parameter Set 2 on the falling edge of the digital input. • The User Parameter Set changes only when the drive is stopped. -2…-6 = DI2(INV)…DI6(INV) – Defines an inverted digital input DI2…DI6 as a control for changing User Parameter Sets. • See DI1(INV) above.				
1606	**LOCAL LOCK**	**-6…8**	**1**	**0**	
	Defines control for the use of the HAND mode. The HAND mode allows drive control from the control panel. • When LOCAL LOCK is active, the control panel cannot change to HAND mode. 0 = NOT SEL – Disables the lock. The control panel can select HAND and control the drive. 1 = DI1 – Defines digital input DI1 as the control for setting the local lock. • Activating the digital input locks out local control. • De-activating the digital input enable the HAND selection. 2…6 = DI2…DI6 – Defines digital input DI2…DI6 as the control for setting the local lock. • See DI1 above. 7 = ON – Sets the lock. The control panel cannot select HAND, and cannot control the drive. 8 = COMM – Defines bit 14 of the Command Word 1 as the control for setting the local lock. • The Command Word is supplied through fieldbus communication. • The Command Word is 0301. -1 = DI1(INV) – Defines an inverted digital input DI1 as the control for setting the local lock. • De-activating the digital input locks out local control. • Activating the digital input enable the HAND selection. -2…-6 = DI2(INV)…DI6(INV) – Defines an inverted digital input DI2…DI6 as the control for setting the local lock. • See DI1(INV) above.				
1607	**PARAM. SAVE**	**0, 1**	**1**	**0**	
	Saves all altered parameters to permanent memory. • Parameters altered through a fieldbus are not automatically saved to permanent memory. To save, you must use this parameter. • If 1602 PARAMETER LOCK = 2 (NOT SAVED), parameters altered from the control panel are not saved. To save, you must use this parameter. • If 1602 PARAMETER LOCK = 1 (OPEN), parameters altered from the control panel are stored immediately to permanent memory. 0 = DONE – Value changes automatically when all parameters are saved. 1 = SAVE – Saves altered parameters to permanent memory.				

Group 16: System Controls					
Code	**Description**	**Range**	**Resolution**	**Default**	**S**
1608	**START ENABLE 1**	**-6…7**	**1**	**4**	

Selects the source of the start enable 1 signal.
Note: Start enable functionality **differs** from the run enable functionality.

0 = NOT SEL – Allows the drive to start without an external start enable signal.
1 = DI1 – Defines digital input DI1 as the start enable 1 signal.
- This digital input must be activated for start enable 1 signal.
- If the voltage drops and de-activates this digital input, the drive will coast to stop and show alarm 2021 on panel display. The drive will not start until start enable 1 signal resumes.

2…6 = DI2…DI6 – Defines digital input DI2…DI6 as the start enable 1 signal.
- See DI1 above.

7 = COMM – Assigns the fieldbus Command Word as the source for the start enable 1 signal.
- Bit 2 of the Command word 2 (parameter 0302) activates the start disable 1 signal.
- See fieldbus user's manual for detailed instructions.

(-1) = DI1(INV) – Defines an inverted digital input DI1 as the start enable 1 signal.
(-2)…(-6) = DI2(INV)…DI6(INV) – Defines an inverted digital input DI2…DI6 as the start enable 1 signal.
- See DI1(INV) above.

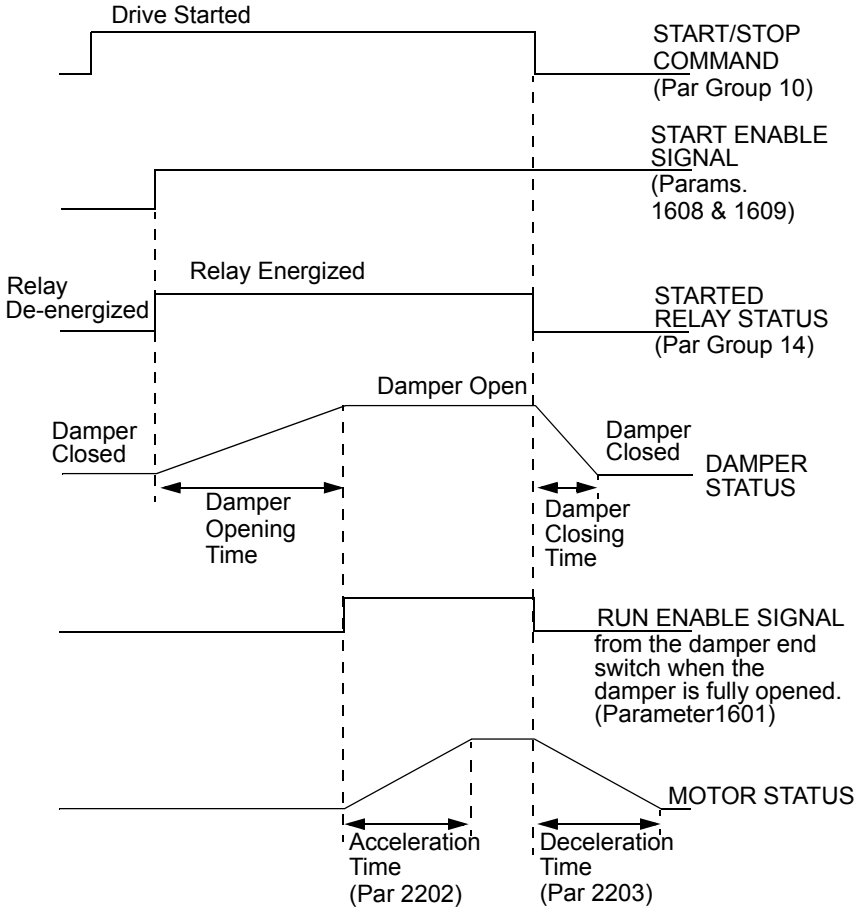

Group 16: System Controls					
Code	**Description**	**Range**	**Resolution**	**Default**	**S**
1609	**START ENABLE 2**	**-6…7**	**1**	**0**	
	Selects the source of the start enable 2 signal. **Note:** Start enable functionality **differs** from the run enable functionality. 0 = NOT SEL – Allows the drive to start without an external start enable signal. 1 = DI1 – Defines digital input DI1 as the start enable 2 signal. This digital input must be activated for start enable 2 signal. If the voltage drops and de-activates this digital input, the drive will coast to stop and show alarm 2022 on panel display. The drive will not start until start enable 2 signal resumes. 2…6 = DI2…DI6 – Defines digital input DI2…DI6 as the start enable 2 signal. See DI1 above. 7 = COMM – Assigns the fieldbus Command Word as the source for the start enable 2 signal. Bit 3 of the Command word 2 (parameter 0302) activates the start disable 2 signal. See fieldbus user's manual for detailed instructions. (-1) = DI1(INV) – Defines an inverted digital input DI1 as the start enable 2 signal. (-2)…(-6) = DI2(INV)…DI6(INV) – Defines an inverted digital input DI2…DI6 as the start enable 2 signal. • See DI1(INV) above.				
1610	**DISPLAY ALARMS**	**0, 1**	**1**	**0**	
	Controls the visibility of the following alarms: • 2001, Overcurrent alarm • 2002, Overvoltage alarm • 2003, Undervoltage alarm • 2009, Device overtemperature alarm 0 = NO – The above alarms are suppressed. 1 = YES – All of the above alarms are enabled.				

Group 17: Override

This group defines the source for the override activation signal, the override speed/ frequency and pass code and how the override is enabled and disabled.

When override DI is activated, the drive stops and then accelerates to the preset speed or frequency. When the DI is deactivated the drive stops and reboots. If the start command, run enable and start enables are active in the AUTO mode the drive starts automatically and continues normally after override mode. In the HAND mode the drive returns to OFF mode.

When override is active:

- Drive runs at preset speed
- Drive ignores all keypad commands
- Drive ignores all commands from communication links
- Drive ignores all digital inputs except override activation/deactivation, RUN ENABLE and START ENABLE
- Drive displays alarm message "2020 OVERRIDE MODE"

The following faults are ignored:

3	DEVICE OVERTEMP
5	OVERLOAD
6	DC UNDERVOLT
7	AI1 LOSS
8	AI2 LOSS
9	MOTOR TEMP
10	PANEL LOSS
12	MOTOR STALL
14	EXTERNAL FLT 1
15	EXTERNAL FLT 2
17	UNDERLOAD
18	THERM FAIL
21	CURR MEAS
22	SUPPLY PHASE
24	OVERSPEED
28	SERIAL 1 ERR
29	EFB CONFIG FILE
30	FORCE TRIP
31	EFB 1
32	EFB 2
33	EFB 3
34	MOTOR PHASE
1001	PAR PFC REFNEG

1002	PAR PFC IOCONF
1003	PAR AI SCALE
1004	PAR AO SCALE
1006	PAR EXTROMISSING
1007	PAR FBUSMISSING
1008	PAR PFCWOSCALAR

Commissioning the Override Mode:

1. Enter the parameters in all groups as needed, except group 17.
2. Select the digital input that will activate override mode P1701.
3. Enter the frequency or speed reference for override mode, P1702 and P1703, according to the motor control mode P9904.
4. Enter the pass code P1704 (358).
5. Enable the override mode P1705.

Changing the Override Parameters:

1. If override mode is already enabled, disable it:
   - Enter the pass code P1704.
   - Disable the override mode P1705.
2. If needed, load the override parameter set P9902.
3. Change the parameters as needed, except group 17.
4. Change the parameters in group 17 as needed:
   - Digital input for override mode P1701.
   - Frequency or speed reference, P1702 or P1703.
5. Enter the pass code P1704.
6. Enable the override mode P1705. The drive replaces the override parameter set with new values of all parameters.

Group 17: Override				
Code	**Description**	**Range**	**Resolution**	**DefaultS**
1701	**OVERRIDE SEL**	**-6…6**	**1**	**0**
	Selects the source of the override activation signal. 0 = NOT SEL – Override activation signal not selected. 1 = DI1 – Defines digital input DI1 as the override activation signal. • This digital input must be activated for override activation signal. 2…6 = DI2…DI6 – Defines digital input DI2…DI6 as the override activation signal. • See DI1 above. (-1) = DI1(INV) – Defines an inverted digital input DI1 as the override activation signal. (-2)…(-6) = DI2(INV)…DI6(INV) – Defines an inverted digital input DI2…DI6 as the override activation signal. • See DI1(INV) above.			
1702	**OVERRIDE FREQ**	**-500…500 Hz**	**0.1**	**0.0**
	Defines a preset frequency for the override. **Note!** Set this value if motor control mode (Par. 9904) is SCALAR: FREQ (3).			

Group 17: Override				
Code	**Description**	**Range**	**Resolution**	**DefaultS**
1703	**OVERRIDE SPEED** Defines a preset speed for the override. Note! Set this value if motor control mode (Par.9904) is VECTOR: SPEED (1).	**-30.000…30.000 rpm**	**1**	**0**
1704	**OVERR PASS CODE** Entering the correct override pass code unlocks parameter 1705 for one change. • Enter the pass code always before changing the value of the parameter 1705. • See parameter 1705 below. • The pass code is 358. • The entry reverts back to zero automatically.	**0…65535**	**1**	**0**
1705	**OVERRIDE ENABLE** Selects whether the override is enabled or disabled. 0 = OFF – Override disabled. 1 = ON – Override enabled. • When enabled, the drive stores the values of all parameters into an override parameter set (see parameter 9902) and the parameters in Group 17 will be write protected (except parameter 1704). To change the other parameters in the Group 17, override has to be disabled.	**0…1**	**1**	**0**

Group 20: Limits

This group defines minimum and maximum limits to follow in driving the motor – speed, frequency, current, torque, etc.

Group 20: Limits					
Code	**Description**	**Range**	**Resolution**	**Default**	**S**
2001	**MINIMUM SPEED**	**-30000…30000 rpm**	**1 rpm**	**0 rpm**	✓
	Defines the minimum speed (rpm) allowed. • A positive (or zero) minimum speed value defines two ranges, one positive and one negative. • A negative minimum speed value defines one speed range. • See figure.		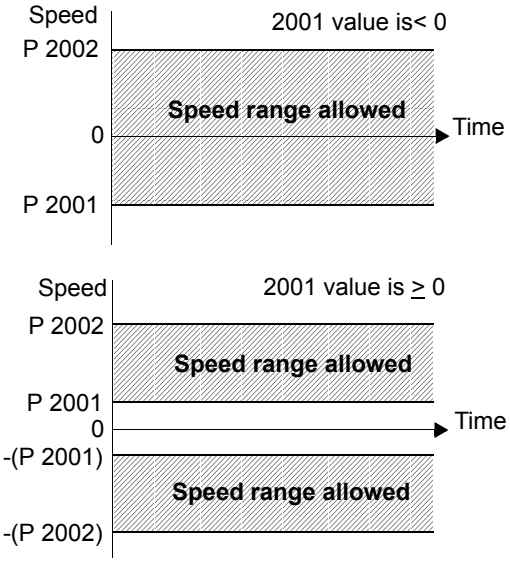		
2002	**MAXIMUM SPEED**	**0…30000 rpm**	**1 rpm**	**1800 (US)**	✓
	Defines the maximum speed (rpm) allowed.				
2003	**MAX CURRENT**	**0.0… 1.3 * I_{2N}**	**0.1 A**	**1.3 * I_{2N}**	✓
	Defines the maximum output current (A) supplied by the drive to the motor.				
2006	**UNDERVOLT CTRL**	**0…2**	**1**	**1**	
	Sets the DC undervoltage controller on or off. When on: • If the DC bus voltage drops due to loss of input power, the undervoltage controller decreases the motor speed in order to keep the DC bus voltage above the lower limit. • When the motor speed decreases, the inertia of the load causes regeneration back into the drive, keeping the DC bus charged, and preventing an undervoltage trip. • The DC undervoltage controller increases power loss ride-through on systems with a high inertia, such as a centrifuge or a fan. 0 = DISABLE – Disables controller. 1 = ENABLE (TIME) – Enables controller with 500 ms time limit for operation. 2 = ENABLE – Enables controlled without maximum time limit for operation.				

Group 20: Limits					
Code	**Description**	**Range**	**Resolution**	**Default**	**S**
2007	**MINIMUM FREQ**	**-500.0…500.0 Hz**	**0.1 Hz**	**0.0 Hz**	✓
	Defines the minimum limit for the drive output frequency. • A positive or zero minimum speed frequency defines two ranges, one positive and one negative. • A negative minimum speed frequency defines one speed range. See figure. **Note!** Keep MINIMUM FREQ ≤ MAXIMUM FREQ.		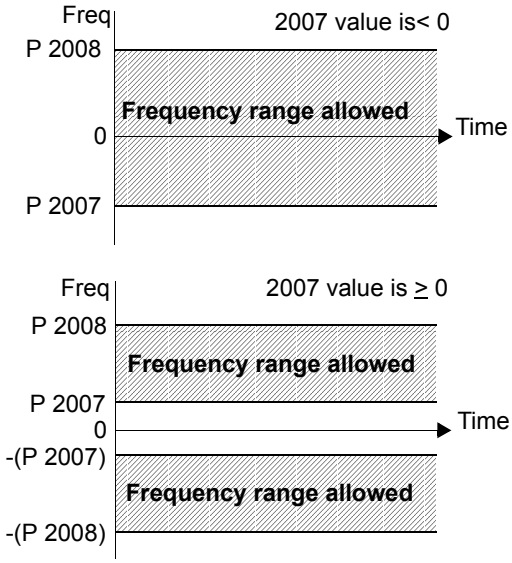		
2008	**MAXIMUM FREQ**	**0.0…500.0 Hz**	**0.1 Hz**	**60.0 Hz (US)**	✓
	Defines the maximum limit for the drive output frequency.				
2013	**MIN TORQUE SEL**	**-6…7**	**1**	**0**	
	Defines control of the selection between two minimum torque limits (2015 MIN TORQUE 1 and 2016 MIN TORQUE 2). 0 = MIN TORQUE 1 – Selects 2015 MIN TORQUE 1 as the minimum limit used. 1 = DI1 – Defines digital input DI1 as the control for selecting the minimum limit used. • Activating the digital input selects MIN TORQUE 2 value. • De-activating the digital input selects MIN TORQUE 1 value. 2…6 = DI2…DI6 – Defines digital input DI2…DI6 as the control for selecting the minimum limit used. • See DI1 above. 7 = COMM – Defines bit 15 of the Command Word 1 as the control for selecting the minimum limit used. • The Command Word is supplied through fieldbus communication. The Command Word is a parameter 0301. -1 = DI1(INV) – Defines an inverted digital input DI1 as the control for selecting the minimum limit used. • Activating the digital input selects MIN TORQUE 1 value. • De-activating the digital input selects MIN TORQUE 2 value. -2…-6 = DI2(INV)…DI6(INV) – Defines an inverted digital input DI2…DI6 as the control for selecting the minimum limit used. • See DI1(INV) above.				
2014	**MAX TORQUE SEL**	**-6…7**	**1**	**0**	
	Defines control of the selection between two maximum torque limits (2017 MAX TORQUE 1 and 2018 MAX TORQUE 2). 0 = MAX TORQUE 1 – Selects 2017 MAX TORQUE 1 as the maximum limit used. 1 = DI1 – Defines digital input DI1 as the control for selecting the maximum limit used. Activating the digital input selects MAX TORQUE 2 value. De-activating the digital input selects MAX TORQUE 1 value. 2…6 = DI2…DI6 – Defines digital input DI2…DI6 as the control for selecting the maximum limit used. • See DI1 above. 7 = COMM – Defines bit 15 of the Command Word 1 as the control for selecting the maximum limit used. • The Command Word is supplied through fieldbus communication. • The Command Word is a parameter 0301. -1 = DI1(INV) – Defines an inverted digital input di1 as the control for selecting the maximum limit used. • Activating the digital input selects MAX TORQUE 1 value. • De-activating the digital input selects MAX TORQUE 2 value. -2…-6 = DI2(INV)…DI6(INV) – Defines an inverted digital input DI2…DI6 as the control for selecting the maximum limit used. • See DI1(INV) above.				

Group 20: Limits					
Code	**Description**	**Range**	**Resolution**	**Default**	**S**
2015	**MIN TORQUE 1**	**-600.0%…0.0%**	**0.1%**	**-300.0%**	
	Sets the first minimum limit for torque (%). Value is a percent of the motor nominal torque.				
2016	**MIN TORQUE 2**	**-600.0%…0.0%**	**0.1%**	**-300.0%**	
	Sets the second minimum limit for torque (%). Value is a percent of the motor nominal torque.				
2017	**MAX TORQUE 1**	**0.0%…600.0%**	**0.1%**	**300.0%**	
	Sets the first maximum limit for torque (%). Value is a percent of the motor nominal torque.				
2018	**MAX TORQUE 2**	**0.0%…600.0%**	**0.1%**	**300.0%**	
	Sets the second maximum limit for torque (%). Value is a percent of the motor nominal torque.				

21: Start/Stop

This group defines how the motor starts and stops. The ACH550 supports several start and stop modes.

Group 21: Start/Stop					
Code	**Description**	**Range**	**Resolution**	**Default**	**S**
2101	**START FUNCTION**	**1…5**	**1**	**1**	✓
	Selects the motor start method. 1 = AUTO – Selects the automatic start mode. • VECTOR control modes: Optimal start in most cases. The drive automatically selects the correct output frequency to start a rotating motor. • SCALAR: FREQ mode: Immediate start from zero frequency. 2 = DC MAGN – Selects the DC Magnetizing start mode. **Note!** The DC Magnetizing start mode cannot start a rotating motor. **Note!** The drive starts when the set pre-magnetizing time (param. 2103) has passed, even if motor magnetization is not complete. • VECTOR control modes: Magnetizes the motor within the time determined by the parameter 2103 DC MAGN TIME using DC current. The normal control is released exactly after the magnetizing time. This selection guarantees the highest possible break-away torque. • SCALAR SPEED mode: Magnetizes the motor within the time determined by the parameter 2103 DC MAGN TIME using DC current. The normal control is released exactly after the magnetizing time. 3 = SCALAR FLYSTART – Selects the flying start mode. • VECTOR control modes: Not applicable. • SCALAR control mode: The drive automatically selects the correct output frequency to start a rotating motor – useful if the motor is already rotating and if the drive will start smoothly at the current frequency. 4 = TORQ BOOST – Selects the automatic torque boost mode (SCALAR SPEED mode only). • May be necessary in drives with high starting torque. • Torque boost is only applied at start, ending when output frequency exceeds 20 Hz or when output frequency is equal to reference. • In the beginning the motor magnetizes within the time determined by the parameter 2103 DC MAGN TIME using DC current. • See parameter 2110 TORQ BOOST CURR. 5 = FLYSTART + TORQ BOOST – Selects both the flying start and the torque boost mode (SCALAR SPEED mode only). • Flying start routine is performed first and the motor is magnetized. If the speed is found to be zero, the torque boost is done.				
2102	**STOP FUNCTION**	**1, 2**	**1**	**1**	
	Selects the motor stop method. 1 = COAST – Selects cutting off the motor power as the stop method. The motor coasts to stop. 2 = RAMP – Selects using a deceleration ramp • Deceleration ramp is defined by 2203 DECELER TIME 1 or 2206 DECELER TIME 2 (whichever is active).				
2103	**DC MAGN TIME**	**0.00…10.00 s**	**0.01 s**	**0.30 s**	
	Defines the pre-magnetizing time for the DC Magnetizing start mode. • Use parameter 2101 to select the start mode. • After the start command, the drive pre-magnetizes the motor for the time defined here, and then starts the motor. • Set the pre-magnetizing time just long enough to allow full motor magnetization. Too long a time heats the motor excessively.				

Group 21: Start/Stop					
Code	**Description**	**Range**	**Resolution**	**Default**	**S**
2104	**DC CURR CTL**	**0…2**	**-**	**0**	✓
	Selects whether DC current is used for braking. 0 = NOT SEL – Disables the DC current operation. 1 = DC HOLD – Enables the DC Hold function. See diagram. • Requires parameter 9904 MOTOR CTRL MODE = 1 (VECTOR SPEED) • Stops generating sinusoidal current and injects DC into the motor when both the reference and the motor speed drop below the value of parameter 2105. • When the reference rises above the level of parameter 2105 the drive resumes normal operation. 2 = DC BRAKING – Enables the DC Injection Braking after modulation has stopped. • If parameter 2102 STOP FUNCTION is 1 (COAST), braking is applied after start is removed. • If parameter 2102 STOP FUNCTION IS 2 (RAMP), braking is applied after ramp. 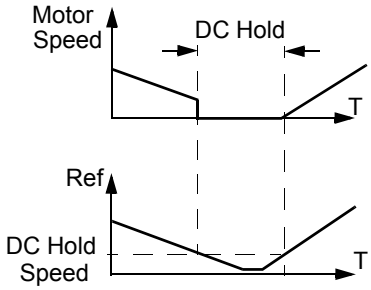				
2105	**DC HOLD SPEED**	**0…360**	**1 rpm**	**5 rpm**	
	Sets the speed for DC Hold. Requires that parameter 2104 DC CURR CTL = 1 (DC HOLD).				
2106	**DC CURR REF**	**0…100%**	**1%**	**30%**	
	Defines the DC current control reference as a percentage of parameter 9906 (MOTOR NOM CURR).				
2107	**DC BRAKE TIME**	**0…250 s**	**0.1 s**	**0 s**	
	Defines the DC brake time after modulation has stopped, if parameter 2104 is 2 (DC BRAKING).				
2108	**START INHIBIT**	**0, 1**	**1**	**0**	✓
	Sets the Start inhibit function on or off. The Start inhibit function ignores a pending start command in any of the following situations (a new start command is required): • A fault is reset. • Run Enable (parameter 1601) activates while start command is active. • Mode changes from local to remote. • Mode changes from remote to local. • Control switches from EXT1 to EXT2. • Control switches from EXT2 to EXT1. 0 = OFF – Disables the Start inhibit function. 1 = ON – Enables the Start inhibit function.				
2109	**EM STOP SEL**	**-6…6**	**1**	**0**	
	Defines control of the Emergency stop command. When activated: • Emergency stop decelerates the motor using the emergency stop ramp (parameter 2208 EM DEC TIME). • Requires an external stop command and removal of the emergency stop command before drive can restart. 0 = NOT SEL – Disables the Emergency stop function through digital inputs. 1 = DI1 – Defines digital input DI1 as the control for Emergency stop command. • Activating the digital input issues an Emergency stop command. • De-activating the digital input removes the Emergency stop command. 2…6 = DI2…DI6 – Defines digital input DI2…DI6 as the control for Emergency stop command. • See DI1 above. -1 = DI1(INV) – Defines an inverted digital input DI1 as the control for Emergency stop command. • De-activating the digital input issues an Emergency stop command. • Activating the digital input removes the Emergency stop command. -2…-6 = DI2(INV)…DI6(INV) – Defines an inverted digital input DI2…DI6 as the control for Emergency stop command. • See DI1(INV) above.				
2110	**TORQ BOOST CURR**	**15…300%**	**1**	**100%**	
	Sets the maximum supplied current during torque boost. • See parameter 2101 START FUNCTION.				

Group 22: Accel/Decel

This group defines ramps that control the rate of acceleration and deceleration. You define these ramps as a pair, one for acceleration and one for deceleration. You can define two pairs of ramps and use a digital input to select one or the other pair.

Group 22: Accel/Decel					
Code	**Description**	**Range**	**Resolution**	**Default**	**S**
2201	**ACC/DEC 1/2 SEL**	**-6…7**	**1**	**0**	
	Defines control for selection of acceleration/deceleration ramps. • Ramps are defined in pairs, one each for acceleration and deceleration. • See below for the ramp definition parameters. 0 = NOT SEL – Disables selection, the first ramp pair is used. 1 = DI1 – Defines digital input DI1 as the control for ramp pair selection. • Activating the digital input selects ramp pair 2. • De-activating the digital input selects ramp pair 1. 2…6 = DI2…DI6 – Defines digital input DI2…DI6 as the control for ramp pair selection. • See DI1 above. 7 = COMM – Defines serial communication as the control for ramp pair selection. -1 = DI1(INV) – Defines an inverted digital input DI1 as the control for ramp pair selection. • De-activating the digital input selects ramp pair 2 • Activating the digital input selects ramp pair 1. -2…-6 = DI2(INV)…DI6(INV) – Defines an inverted digital input DI2…DI6 as the control for ramp pair selection. • See DI1(INV) above.				
2202	**ACCELER TIME 1**	**0.0…1800.0 s**	**0.1 s**	**30.0 s**	
	Sets the acceleration time for zero to maximum frequency for ramp pair 1. See A in figure. • Actual acceleration time also depends on 2204 RAMP SHAPE. • See 2008 MAXIMUM FREQUENCY.				
2203	**DECELER TIME 1**	**0.0…1800.0 s**	**0.1 s**	**30.0 s**	
	Sets the deceleration time for maximum frequency to zero for ramp pair 1. • Actual deceleration time also depends on 2204 RAMP SHAPE. • See 2008 MAXIMUM FREQUENCY.				
2204	**RAMP SHAPE 1**	**0...1000.0 s**	**0.1 s**	**0.0**	
	Selects the shape of the acceleration/deceleration ramp for ramp pair 1. See B in figure. • Shape is defined as a ramp, unless additional time is specified here to reach the maximum frequency. A longer time provides a softer transition at each end of the slope. The shape becomes an s-curve. • Rule of thumb: 1/5 is a suitable relation between the ramp shape time and the acceleration ramp time. 0.0 = LINEAR – Specifies linear acceleration/deceleration ramps for ramp pair 1. 0.1…1000.0 = S-CURVE – Specifies s-curve acceleration/deceleration ramps for ramp pair 1. 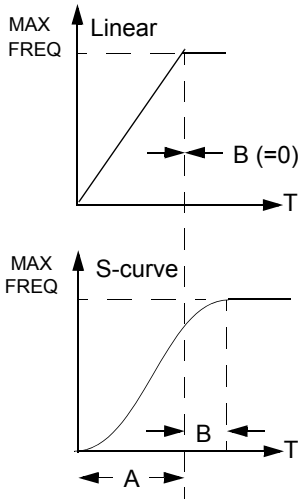 A = 2202 ACCELERATION TIME B = 2204 RAMP SHAPE				
2205	**ACCELER TIME 2**	**0.0…1800.0 s**	**0.1 s**	**60.0 s**	
	Sets the acceleration time (s) for zero to maximum frequency for ramp pair 2. See 2002 ACCELER TIME 1.				
2206	**DECELER TIME 2**	**0.0…1800.0 s**	**0.1 s**	**60.0 s**	
	Sets the deceleration time for maximum frequency to zero for ramp pair 2. See 2003 DECELER TIME 1.				

Group 22: Accel/Decel					
Code	**Description**	**Range**	**Resolution**	**Default**	**S**
2207	**RAMP SHAPE 2** Selects the shape of the acceleration/deceleration ramp for ramp pair 2. See 2004 RAMP SHAPE 1.	**0…1000.0 s**	**0.1 s**	**0.0**	
2208	**EM DEC TIME** Sets the deceleration time for maximum frequency to zero for an emergency. • See parameter 2109 EM STOP SEL. • Ramp is linear.	**0.0…1800 s**	**0.1 s**	**1.0 s**	
2209	**RAMP INPUT 0** Defines control for forcing the ramp input to 0. 0 = NOT SEL – 1 = DI1 – Defines digital input DI1 as the control for forcing the ramp input to 0. • Activating the digital input forces ramp input to 0. Ramp output will ramp to 0 according to the currently used ramp time, after which it will stay at 0. • De-activating the digital input: ramp resumes normal operation. 2…6 = DI2…DI6 – Defines digital input DI2…DI6 as the control for forcing the ramp input to 0. • See DI1 above. -1 = DI1(INV) – Defines an inverted digital input DI1 as the control for forcing the ramp input to 0. • De-activating the digital input forces ramp input to 0. • Activating the digital input: ramp resumes normal operation. -2…-6 = DI2(INV)…DI6(INV) – Defines an inverted digital input DI2…DI6 as the control for forcing the ramp function generator input to 0. • See DI1(INV) above.	**-6…6**	**1**	**0**	

Group 23: Speed Control

This group defines variables used for speed control operation.

Group 23: Speed Control					
Code	**Description**	**Range**	**Resolution**	**Default**	**S**
2301	**PROP GAIN** Sets the relative gain for the speed controller. • Larger values may cause speed oscillation. • The figure shows the speed controller output after an error step (error remains constant). **Note!** You can use parameter 2305, AUTOTUNE RUN, to automatically set proportional gain. 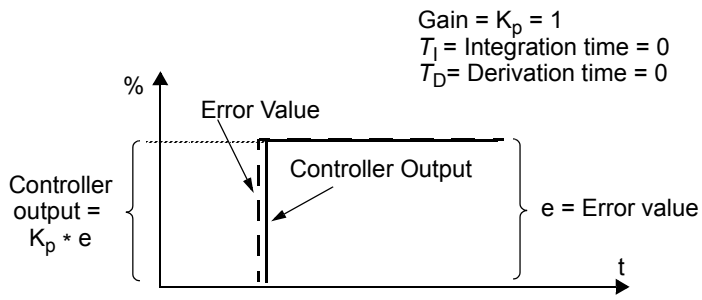 	**0.00…200.00**	**0.01**	**3.00**	
2302	**INTEGRATION TIME** Sets the integration time for the speed controller. • The integration time defines the rate at which the controller output changes for a constant error value. • Shorter integration times correct continuous errors faster. • Control becomes unstable if the integration time is too short. • The figure shows the speed controller output after an error step (error remains constant). **Note!** You can use parameter 2305, AUTOTUNE RUN, to automatically set proportional gain. 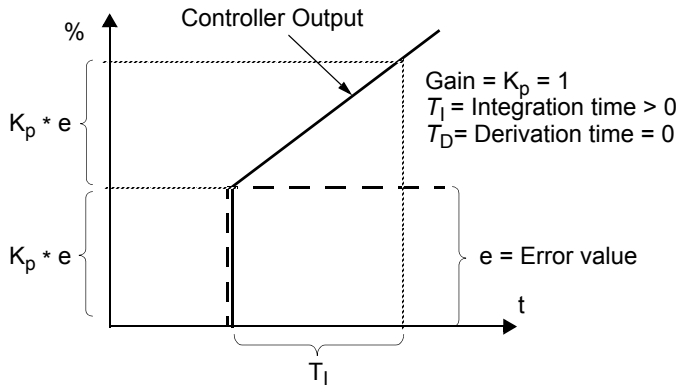 	**0.00…600.00 s**	**0.01 s**	**2.50**	
2303	**DERIVATION TIME** Sets the derivation time for the speed controller. • Derivative action makes the control more responsive to error value changes. • The longer the derivation time, the more the speed controller output is boosted during the change. • If the derivation time is set to zero, the controller works as a PI controller, otherwise as a PID controller. The figure shows the speed controller output after an error step when the error remains constant. 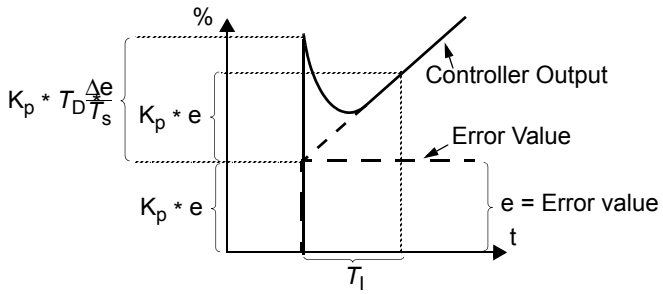 Gain = K_p = 1 T_I = Integration time > 0 T_D= Derivation time > 0 T_s= Sample time period = 2 ms Δe = Error value change between two samples	**0…10000 ms**	**1 ms**	**0**	

Group 23: Speed Control					
Code	**Description**	**Range**	**Resolution**	**Default**	**S**
2304	**ACC COMPENSATION**	**0.00…600.00 s**	**0.01 s**	**0.00**	
	Sets the derivation time for acceleration compensation. • Adding a derivative of the reference to the output of the speed controller compensates for inertia during acceleration. • 2303 DERIVATION TIME describes the principle of derivative action. • Rule of thumb: Set this parameter between 50 and 100% of the sum of the mechanical time constants for the motor and the driven machine. • The figure shows the speed responses when a high inertia load is accelerated along a ramp. **No Acceleration Compensation** 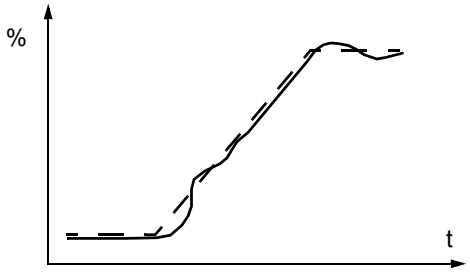 **Acceleration Compensation** 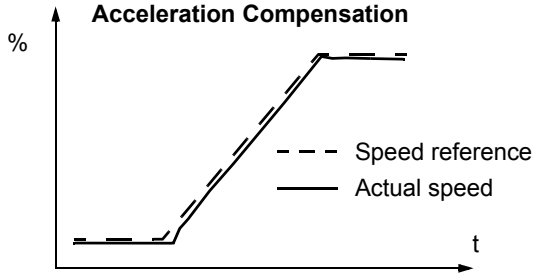 ***Note!** You can use parameter 2305 AUTOTUNE RUN to automatically set acceleration compensation.				
2305	**AUTOTUNE RUN**	**0…1**	**1**	**0**	
	Starts automatic tuning of the speed controller. 0 = OFF– Disables the Autotune creation process. (Does not disable the operation of Autotune settings.) 1 = ON – Activates speed controller autotuning. Automatically reverts to OFF. Procedure: Note! The motor load must be connected. • Run the motor at a constant speed of 20 to 40% of the rated speed. • Change the autotuning parameter 2305 to ON. The drive: • Accelerates the motor. • Calculates values for proportional gain, integration time and acceleration compensation. • Changes parameters 2301, 2302 and 2304 to these values. • Resets 2305 to OFF.				

Group 25: Critical Speeds

This group defines up to three critical speeds or ranges of speeds that are to be avoided due, for example, to mechanical resonance problems at certain speeds.

Group 25: Critical Speeds					
Code	**Description**	**Range**	**Resolution**	**Default**	**S**
2501	**CRIT SPEED SEL** Sets the critical speeds function on or off. The critical speed function avoids specific speed ranges. 0 = OFF – Disables the critical speeds function. 1 = ON – Enables the critical speeds function. Example: To avoid speeds at which a fan system vibrates badly: • Determine problem speed ranges. Assume they are found to be: 18…23 Hz and 46…52 Hz. • Set 2501 CRIT SPEED SEL = 1. • Set 2502 CRIT SPEED 1 LO = 18 Hz. • Set 2503 CRIT SPEED 1 HI = 23 Hz. • Set 2504 CRIT SPEED 2 LO = 46 Hz. • Set 2505 CRIT SPEED 2 HI = 52 Hz. 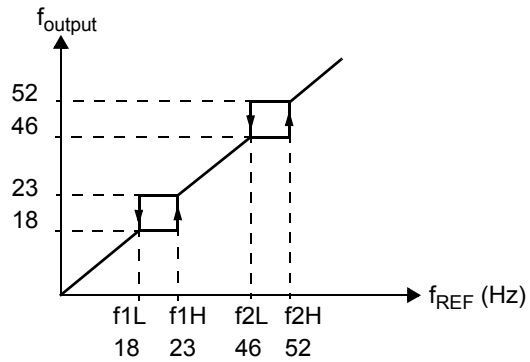	**0, 1**	**1**	**0**	
2502	**CRIT SPEED 1 LO** Sets the minimum limit for critical speed range 1. • The value must be less than or equal to 2503 CRIT SPEED 1 HI. • Units are rpm, unless 9904 MOTOR CTRL MODE = 3 (SCALAR SPEED), then units are Hz.	**0…30000 rpm / 0.0…500.0 Hz**	**1 rpm / 0.1 Hz**	**0 rpm / 0.0 Hz**	
2503	**CRIT SPEED 1 HI** Sets the maximum limit for critical speed range 1. • The value must be greater than or equal to 2502 CRIT SPEED 1 LO. • Units are rpm, unless 9904 MOTOR CTRL MODE = 3 (SCALAR SPEED), then units are Hz.	**0…30000 rpm / 0.0…500.0 Hz**	**1 rpm / 0.1 Hz**	**0 rpm / 0.0 Hz**	
2504	**CRIT SPEED 2 LO** Sets the minimum limit for critical speed range 2. • See parameter 2502.	**0…30000 rpm / 0.0…500.0 Hz**	**1 rpm / 0.1 Hz**	**0 rpm / 0.0 Hz**	
2505	**CRIT SPEED 2 HI** Sets the maximum limit for critical speed range 2. • See parameter 2503.	**0…30000 rpm / 0.0…500.0 Hz**	**1 rpm / 0.1 Hz**	**0 rpm / 0.0 Hz**	
2506	**CRIT SPEED 3 LO** Sets the minimum limit for critical speed range 3. • See parameter 2502.	**0…30000 rpm / 0.0…500.0 Hz**	**1 rpm / 0.1 Hz**	**0 rpm / 0.0 Hz**	
2507	**CRIT SPEED 3 HI** Sets the maximum limit for critical speed range 3. • See parameter 2503.	**0…30000 rpm / 0.0…500.0 Hz**	**1 rpm / 0.1 Hz**	**0 rpm / 0.0 Hz**	

Group 26: Motor Control

This group provides controls for fine-tuning the motor control.

Group 26: Motor Control					
Code	**Description**	**Range**	**Resolution**	**Default**	**S**
2601	**FLUX OPTIMIZATION**	**0…1**	**1**	**0**	
	Changes the magnitude of the flux depending on the actual load. Flux Optimization can reduce the total energy consumption and noise, and should be enabled for drives that usually operate below nominal load. 0 = OFF – Disables the feature. 1 = ON – Enables the feature.				
2602	**FLUX BRAKING**	**0…1**	**1**	**0**	
	Provides faster deceleration by raising the level of magnetization in the motor when needed, instead of limiting the deceleration ramp. By increasing the flux in the motor, the energy of the mechanical system is changed to thermal energy in the motor. 0 = OFF – Disables the feature. 1 = ON – Enables the feature.				
2603	**IR COMP VOLT**	**0…100 V**	**1 V**	**size dependent**	
	Sets the IR compensation voltage used for 0 Hz. • Requires parameter 9904 MOTOR CTRL MODE = 3 (SCALAR SPEED). • Keep IR compensation as low as possible to prevent overheating. • Typical IR compensation values are:				
2604	**IR COMP FREQ**	**0…100%**	**1**	**80%**	
	Sets the frequency at which IR compensation is 0 V (in % of motor frequency).				
2605	**U/f RATIO**	**1, 2**	**1**	**1**	
	Selects the form for the U/f (voltage to frequency) ratio below field weakening point. 1 = LINEAR – Preferred for constant torque applications. 2 = SQUARED – Preferred for centrifugal pump and fan applications. (Square is more silent for most operating frequencies.)				

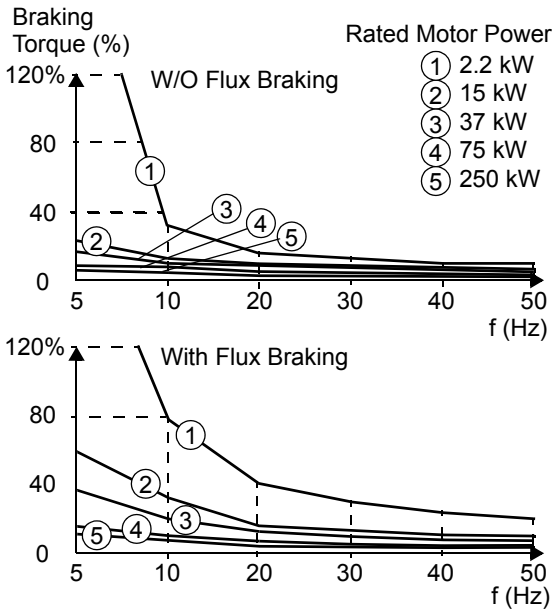

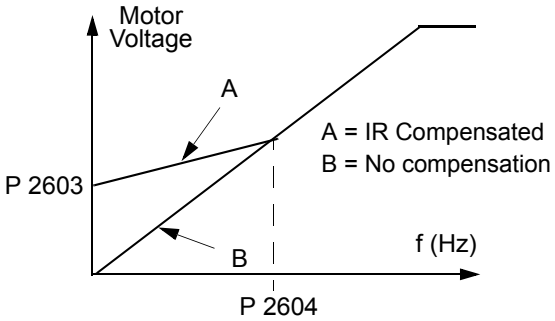

380…480 V Units					
P_N (kW)	3	7.5	15	37	132
IR comp (V)	18	15	12	8	3

IR Compensation
- When enabled, IR Compensation provides an extra voltage boost to the motor at low speeds. Use IR Compensation, for example, in applications that require a high breakaway torque.

Group 26: Motor Control					
Code	**Description**	**Range**	**Resolution**	**Default**	**S**
2606	**SWITCHING FREQ**	**1, 4, 8, 12 kHz**	**-**	**4 kHz**	
	Sets the switching frequency for the drive. Also see parameter 2607 SW FREQ CTRL and "Switching Frequency Derating" on page 256. • Higher switching frequencies mean less noise. • 12 kHz switching frequency is available only if parameter 9904 MOTOR CTRL MODE = 3 (SCALAR:SPEED). • The 12 kHz switching frequency is available only on frame sizes R1…R6				
2607	**SW FREQ CTRL**	**0, 1**	**-**	**1**	
	The switching frequency may be reduced if the ACH550 internal temperature rises above a limit. See Figure. This function allows the highest possible switching frequency to be used based on operating conditions. Higher switching frequency results in lower acoustic noise. 0 = OFF – The function is disabled. 1 = ON – The switching frequency is limited according to the figure. 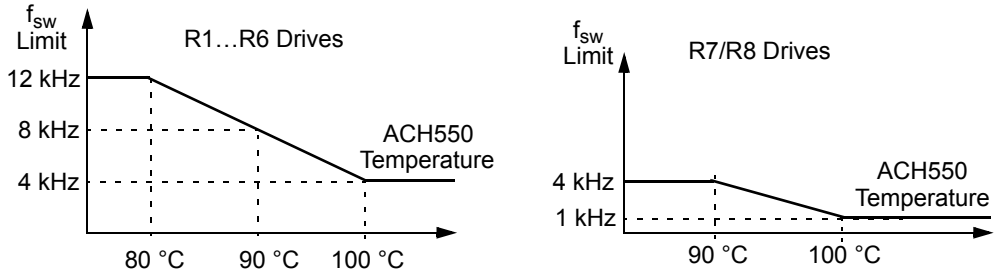 				
2608	**SLIP COMP RATIO**	**0…200%**	**1**	**0**	
	Sets gain for slip compensation (in %). • A squirrel-cage motor slips under load. Increasing the frequency as the motor torque increases compensates for the slip. • Requires parameter 9904 MOTOR CTRL MODE = SCALAR SPEED. 0 = No slip compensation. 1…200 = Increasing slip compensation. 100% means full slip compensation.				
2609	**NOISE SMOOTHING**	**0, 1**	**1**	**0**	
	This parameter introduces a random component to the switching frequency. Noise smoothing distributes the acoustic motor noise over a range of frequencies instead of a single tonal frequency resulting in lower peak noise intensity. The random component has an average of 0Hz and is added to the switching frequency set by parameter 2606 (SWITCHING FREQ). This parameter has no effect if parameter 2606 = 12kHz. 0 = DISABLE 1 = ENABLE				

Group 29: Maintenance Trig

This group contains usage levels and trigger points. When usage reaches the set trigger point, a notice displayed on the control panel signals that maintenance is due.

Group 29: Maintenance Trig					
Code	**Description**	**Range**	**Resolution**	**Default**	**S**
2901	**COOLING FAN TRIG** Sets the trigger point for the drive's cooling fan counter. 0.0 = NOT SEL	**0.0…6553.5 kh**	**0.1 kh**	**0.0**	
2902	**COOLING FAN ACT** Defines the actual value of the drive's cooling fan counter. • The parameter is reset by writing 0.0 to it.	**0.0…6553.5 kh**	**0.1 kh**	**0.0**	
2903	**REVOLUTION TRIG** Sets the trigger point for the motor's accumulated revolutions counter. 0.0 = NOT SEL	**0…65535 MRev**	**1 MRev**	**0**	
2904	**REVOLUTION ACT** Defines the actual value of the motor's accumulated revolutions counter. • The parameter is reset by writing 0 to it.	**0…65535 MRev**	**1 MRev**	**0**	
2905	**RUN TIME TRIG** Sets the trigger point for the drive's run time counter. 0.0 = NOT SEL	**0.0…6553.5 kh**	**0.1 kh**	**0.0**	
2906	**RUN TIME ACT** Defines the actual value of the drive's run time counter. • The parameter is reset by writing 0.0 to it.	**0.0…6553.5 kh**	**0.1 kh**	**0.0**	
2907	**USER MWh TRIG** Sets the trigger point for the drive's accumulated power consumption (in megawatt hours) counter. 0.0 = NOT SEL	**0.0…6553.5 MWh**	**0.1 MWh**	**0.0**	
2908	**USER MWh ACT** Defines the actual value of the drive's accumulated power consumption (in megawatt hours) counter. • The parameter is reset by writing 0.0 to it.	**0.0…6553.5 MWh**	**0.1 MWh**	**0.0**	

Group 30: Fault Functions

This group defines situations that the drive should recognize as potential faults and defines how the drive should respond if the fault is detected.

Group 30: Fault Functions					
Code	**Description**	**Range**	**Resolution**	**Default**	**S**
3001	**AI<MIN FUNCTION**	**0…3**	**1**	**0**	
	Defines the drive response if the analog input (AI) signal drops below the fault limits and AI is used in reference chain. • 3021 AI1 FAULT LIMIT and 3022 AI2 FAULT LIMIT set the fault limits 0 = NOT SEL – No response. 1 = FAULT – Displays a fault (7, AI1 LOSS or 8, AI2 LOSS) and the drive coasts to stop. 2 = CONST SP7 – Displays a warning (2006, AI1 LOSS or 2007, AI2 LOSS) and sets speed using 1208 CONST SPEED 7. 3 = LAST SPEED – Displays a warning (2006, AI1 LOSS or 2007, AI2 LOSS) and sets speed using the last operating level. This value is the average speed over the last 10 seconds. **Warning! If you select CONST SP7 or LAST SPEED, make sure that continued operation is safe when the analog input signal is lost.**				
3002	**PANEL COMM ERR**	**1…3**	**1**	**1**	
	Defines the drive response to a control panel communication error. 1 = FAULT – Displays a fault (10, PANEL LOSS) and the drive coasts to stop. 2 = CONST SP7 – Displays a warning (2008, PANEL LOSS) and sets speed using 1208 CONST SPEED 7. 3 = LAST SPEED – Displays a warning (2008, PANEL LOSS) and sets speed using the last operating level. This value is the average speed over the last 10 seconds. **Warning! If you select CONST SP7 or LAST SPEED, make sure that continued operation is safe when the control panel communication is lost.**				
3003	**EXTERNAL FAULT 1**	**-6…6**	**1**	**0**	
	Defines the External Fault 1 signal input and the drive response to an external fault. 0 = NOT SEL – External fault signal is not used. 1 = DI1 – Defines digital input DI1 as the external fault input. • Activating the digital input indicates a fault. The drive displays a fault (14, EXTERNAL FAULT 1) and the drive coasts to stop. 2…6 = DI2…DI6 – Defines digital input DI2…DI6 as the external fault input. • See DI1 above. -1 = DI1(INV) – Defines an inverted digital input DI1 as the external fault input. • De-activating the digital input indicates a fault. The drive displays a fault (14, EXTERNAL FAULT 1) and the drive coasts to stop. -2…-6 = DI2(INV)…DI6(INV) – Defines an inverted digital input DI2…DI6 as the external fault input. • See DI1(INV) above.				
3004	**EXTERNAL FAULT 2**	**-6…6**	**1**	**0**	
	Defines the External Fault 2 signal input and the drive response to an external fault. • See parameter 3003 above.				
3005	**MOT THERM PROT**	**0, 2**	**1**	**1**	
	Defines the drive response to motor overheating. 0 = NOT SEL – No response and/or motor thermal protection not set up. 1 = FAULT – When the calculated motor temperature exceeds 90 C, displays a warning (2010, MOT OVERTEMP). When the calculated motor temperature exceeds 110 C displays a fault (9, MOT OVERTEMP) and the drive coasts to stop. 2 = WARNING – When the calculated motor temperature exceeds 90 C, displays a warning (2010, MOT OVERTEMP).				

Group 30: Fault Functions					
Code	**Description**	**Range**	**Resolution**	**Default**	**S**
3006	**MOT THERM TIME**	**256…9999 s**	**1**	**1050 s**	
	Sets the motor thermal time constant for the motor temperature model. • This is the time required for the motor to reach 63% of the final temperature with steady load. • For thermal protection according to UL requirements for NEMA class motors, use the rule of thumb: MOTOR THERM TIME equals 35 times t6, where t6 (in seconds) is specified by the motor manufacturer as the time that the motor can safely operate at six times its rated current. • The thermal time for a Class 10 trip curve is 350 s, for a Class 20 trip curve 700 s, and for a Class 30 trip curve 1050 s.				
3007	**MOT LOAD CURVE**	**50…150%**	**1**	**100%**	
	Sets the maximum allowable operating load of the motor. • When set to 100%, the maximum allowable load is equal to the value of Start-up Data parameter 9906 MOTOR NOM CURRENT. • Adjust the load curve level if the ambient temperature differs from nominal.				
3008	**ZERO SPEED LOAD**	**25…150%**	**1**	**70%**	
	Sets the maximum allowable current at zero speed. • Value is relative to 9906 MOTOR NOM CURR.				
3009	**BREAK POINT FREQ**	**1…250 Hz**	**1**	**35 Hz**	
	Sets the break point frequency for the motor load curve. **Example:** Thermal protection trip times when parameters 3006 MOT THERM TIME, 3007 MOT LOAD CURVE and 3008 ZERO SPEED LOAD have default values.				

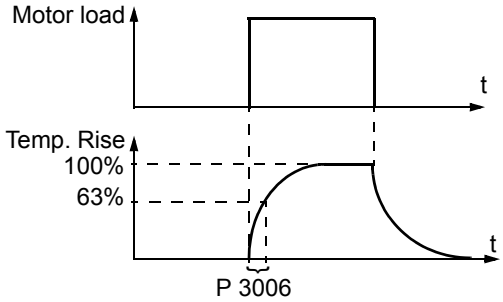

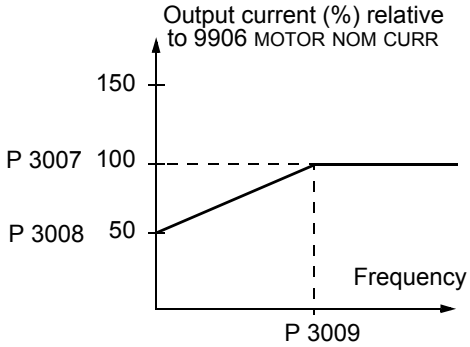

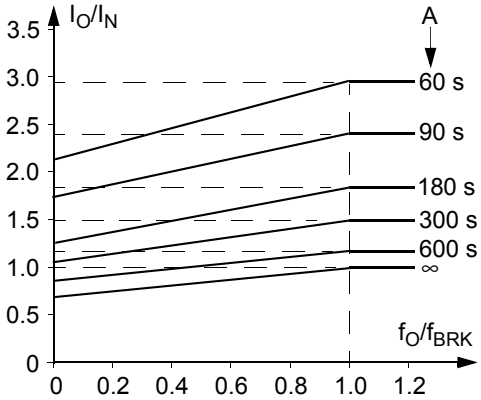

I_O = Output current
I_N = Nominal motor current
f_O = Output frequency
f_{BRK} = Break point frequency
A = Trip time

Group 30: Fault Functions					
Code	**Description**	**Range**	**Resolution**	**Default**	**S**
3010	**STALL FUNCTION**	**0…2**	**1**	**0**	
	This parameter defines the operation of the Stall function. This protection is active if the drive operates in the stall region (see figure) for the time defined by 3012 STALL TIME. The "User Limit" is defined in Group 20 by 2017 MAX TORQUE 1, 2018 MAX TORQUE 2, or the limit on the COMM input. 0 = NOT SEL – Stall protection is not used. 1 = FAULT – When the drive operates in the stall region for the time set by 3012 STALL TIME: • The drive coasts to stop. • A fault indication is displayed. 2 = WARNING – When the drive operates in the stall region for the time set by 3012 STALL TIME: • A warning indication is displayed. • The warning disappears when the drive is out of the stall region for half the time set by parameter 3012 STALL TIME. 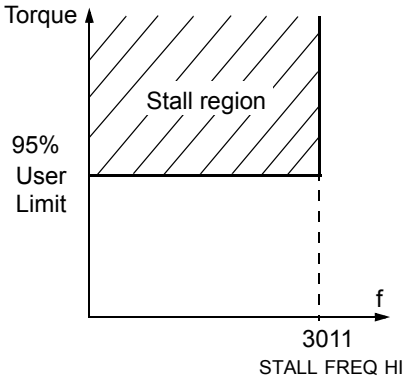				
3011	**STALL FREQUENCY**	**0.5…50.0 Hz**	**0.1 Hz**	**20.0 Hz**	
	This parameter sets the frequency value for the Stall function. Refer to Figure.				
3012	**STALL TIME**	**10…400 s**	**1 s**	**20 s**	
	This parameter sets the time value for the Stall function.				
3013	**UNDERLOAD FUNCTION**	**0…2**	**-**	**0**	
	Removal of motor load may indicate a process malfunction. The protection is activated if: • The motor torque drops below the load curve selected by parameter 3015 UNDERLOAD CURVE. • This condition has lasted longer than the time set by parameter 3014 UNDERLOAD TIME. • Output frequency is higher than 10% of the nominal frequency. 0 = NOT SEL – Underload protection is not used. 1 = FAULT – When the protection is activated the drive coasts to stop. A fault indication is displayed. 2 = WARNING – A warning indication is displayed.				
3014	**UNDERLOAD TIME**	**10…400 s**	**1 s**	**20 s**	
	Time limit for underload protection.				
3015	**UNDERLOAD CURVE**	**1…5**	**1**	**1**	
	This parameter provides five selectable curves shown in the figure. • If the load drops below the set curve for longer than the time set by parameter 3014, the underload protection is activated. • Curves 1…3 reach maximum at the motor rated frequency set by parameter 9907 MOTOR NOM FREQ. • T_M = nominal torque of the motor. • f_N = nominal frequency of the motor. 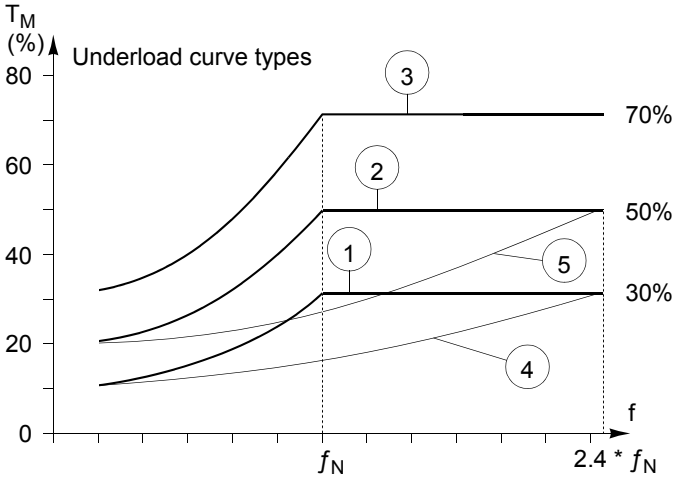				
3017	**EARTH FAULT**	**0…1**	**1**	**1**	
	Defines the drive response if the drive detects a ground fault in the motor or motor cables. The drive monitors for ground faults while the drive is running, and while the drive is not running. Also see parameter 3023 WIRING FAULT. 0 = DISABLE – No drive response to ground faults. 1 = ENABLE – Ground faults display fault 16 (EARTH FAULT), and (if running) the drive coasts to stop.				

Group 30: Fault Functions					
Code	**Description**	**Range**	**Resolution**	**Default**	**S**
3018	**COMM FAULT FUNC**	**0…3**	**1**	**0**	
	Defines the drive response if the fieldbus communication is lost. 0 = NOT SEL – No response. 1 = FAULT – Displays a fault (28, SERIAL 1 ERR) and the drive coasts to stop. 2 = CONST SP7 – Displays a warning (2005, IO COMM) and sets speed using 1208 CONST SPEED 7. This "alarm speed" remains active until the fieldbus writes a new reference value. 3 = LAST SPEED – Displays a warning (2005, IO COMM) and sets speed using the last operating level. This value is the average speed over the last 10 seconds. This "alarm speed" remains active until the fieldbus writes a new reference value. **Caution:** If you select CONST SP7, or LAST SPEED, make sure that continued operation is safe when fieldbus communication is lost.				
3019	**COMM FAULT TIME**	**0.0…60.0 s**	**0.1 s**	**10.0 s**	
	Sets the communication fault time used with 3018 COMM FAULT FUNC. • Brief interruptions in the fieldbus communication are not treated as faults if they are less than the COMM FAULT TIME value.				
3021	**AI1 FAULT LIMIT**	**0.0…100.0%**	**0.1%**	**0.0%**	
	Sets a fault level for analog input 1. See 3001 AI<MIN FUNCTION.				
3022	**AI2 FAULT LIMIT**	**0.0…100.0%**	**0.1%**	**0.0%**	
	Sets a fault level for analog input 2. See 3001 AI<MIN FUNCTION.				
3023	**WIRING FAULT**	**0, 1**	**1**	**1**	
	Defines the drive response to cross wiring faults and to ground faults detected when the drive is NOT running. When the drive is not running it monitors for: • Improper connections of input power to the drive output (the drive can display fault 35, OUTPUT WIRING if improper connections are detected). • Ground faults (the drive can display fault 16, EARTH FAULT if a ground fault is detected). Also, see parameter 3017 EARTH FAULT. 0 = DISABLE – No drive response to either of the above monitoring results. 1 = ENABLE – The drive displays faults when this monitoring detects problems.				

Group 31: Automatic Reset

This group defines conditions for automatic resets. An automatic reset occurs after a particular fault is detected. The drive holds for a set delay time, then automatically restarts. You can limit the number of resets in a specified time period, and you can set up automatic resets for a variety of faults.

Group 31: Automatic Reset					
Code	**Description**	**Range**	**Resolution**	**Default**	**S**
3101	**NR OF TRIALS**	**0…5**	**1**	**5**	
	Sets the number of allowed automatic resets within a trial period defined by 3102 TRIAL TIME. • If the number of automatic resets exceeds this limit (within the trial time), the drive prevents additional automatic resets and remains stopped. • Starting then requires a successful reset performed from the control panel or from a source selected by 1604 FAULT RESET SEL. **Example:** Three faults have occurred in the trial time. The last is reset only if the value for 3101 NR OF TRIALS is 3 or more.				
3102	**TRIAL TIME**	**1.0…600.0 s**	**0.1 s**	**30.0 s**	
	Sets the time period used for counting and limiting the number of resets. • See 3101 NR OF TRIALS.				
3103	**DELAY TIME**	**0.0…120.0 s**	**0.1 s**	**0.0 s**	
	Sets the delay time between a fault detection and attempted drive restart. • If DELAY TIME = zero, the drive resets immediately.				
3104	**AR OVERCURRENT**	**0, 1**	**1**	**0**	
	Sets the automatic reset for the overcurrent function on or off. 0 = DISABLE – Disables automatic reset. 1 = ENABLE – Enables automatic reset. • Automatically resets the fault (OVERCURRENT) after the delay set by 3103 DELAY TIME, and the drive resumes normal operation.				
3105	**AR OVERVOLTAGE**	**0, 1**	**1**	**0**	
	Sets the automatic reset for the overvoltage function on or off. 0 = DISABLE – Disables automatic reset. 1 = ENABLE – Enables automatic reset. • Automatically resets the fault (DC OVERVOLT) after the delay set by 3103 DELAY TIME, and the drive resumes normal operation.				
3106	**AR UNDERVOLTAGE**	**0, 1**	**1**	**0**	
	Sets the automatic reset for the undervoltage function on or off. 0 = DISABLE – Disables automatic reset. 1 = ENABLE – Enables automatic reset. • Automatically resets the fault (DC UNDERVOLTAGE) after the delay set by 3103 DELAY TIME, and the drive resumes normal operation.				
3107	**AR AI<MIN**	**0, 1**	**1**	**0**	
	Sets the automatic reset for the analog input less than minimum value function on or off. 0 = DISABLE – Disables automatic reset. 1 = ENABLE – Enables automatic reset. • Automatically resets the fault (AI<MIN) after the delay set by 3103 DELAY TIME, and the drive resumes normal operation. **Warning! When the analog input signal is restored, the drive may restart, even after a long stop. Make sure that automatic, long delayed starts will not cause physical injury and/or damage equipment.**				
3108	**AR EXTERNAL FLT**	**0, 1**	**1**	**0**	
	Sets the automatic reset for external faults function on or off. 0 = DISABLE – Disables automatic reset. 1 = ENABLE – Enables automatic reset. • Automatically resets the fault (EXTERNAL FAULT 1 or EXTERNAL FAULT 2) after the delay set by 3103 DELAY TIME, and the drive resumes normal operation.				

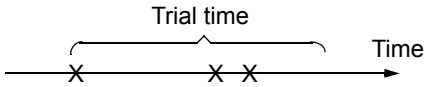

x = Automatic reset

Group 32: Supervision

This group defines supervision for up to three signals from Group 01, Operating Data. Supervision monitors a specified parameter and energizes a relay output if the parameter passes a defined limit. Use Group 14, Relay Outputs, to define the relay and whether the relay activates when the signal is too low or too high.

Group 32: Supervision					
Code	**Description**	**Range**	**Resolution**	**Default**	**S**
3201	**SUPERV 1 PARAM**	**101…199**	**1**	**103**	
	Selects the first supervised parameter. • Must be a parameter number from Group 01 Operating Data. • If the supervised parameter passes a limit, a relay output is energized. • The supervision limits are defined in this group. • The relay outputs are defined in Group 14 Relay Outputs (definition also specifies which supervision limit is monitored). **LO ≤ HI** Operating data supervision using relay outputs, when LO≤HI. • Case A = Parameter 1401 RELAY OUTPUT 1 (or 1402 RELAY OUTPUT 2, etc.) value is SUPRV1 OVER or SUPRV 2 OVER. Use for monitoring when/if the supervised signal exceeds a given limit. The relay remains active until the supervised value drops below the low limit. • Case B = Parameter 1401 RELAY OUTPUT 1 (or 1402 RELAY OUTPUT 2, etc.) value is SUPRV 1 UNDER or SUPRV 2 UNDER. Use for monitoring when/if the supervised signal falls below a given limit. The relay remains active until the supervised value rises above the high limit. **Note!** Case LO ≤ HI represents a normal hysteresis. 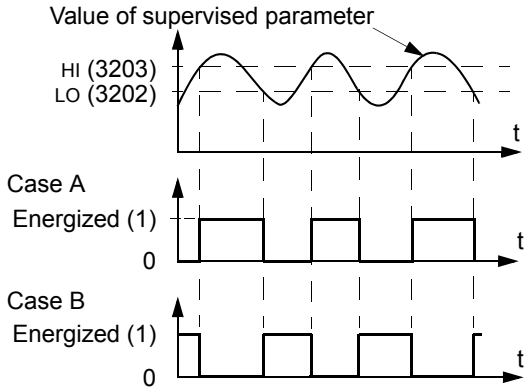 **LO > HI** Operating data supervision using relay outputs, when LO>HI. The lowest limit (HI 3203) is active initially, and remains active until the supervised parameter goes above the highest limit (LO 3202), making that limit the active limit. That limit remains active until the supervised parameter goes below the lowest limit (HI 3203), making that limit active. • Case A = Parameter 1401 RELAY OUTPUT 1 (or 1402 RELAY OUTPUT 2, etc.) value is SUPRV1 OVER or SUPRV2 OVER. Initially the relay is de-energized. It is energized whenever the supervised parameter goes above the active limit. • Case B = Parameter 1401 RELAY OUTPUT 1 (or 1402 RELAY OUTPUT 2, etc.) value is SUPRV1 UNDER or SUPRV2 UNDER. Initially the relay is energized. It is de-energized whenever the supervised parameter goes below the active limit. 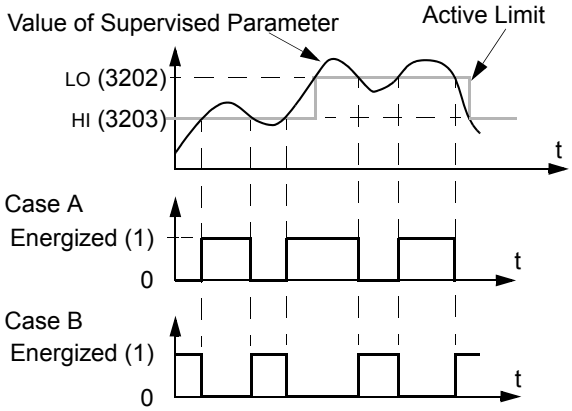 **Note!** Case LO>HI represents a special hysteresis with two separate supervision limits.				
3202	**SUPERV 1 LIM LO**	**Depends on selection**	-	60.0 Hz	
	Sets the low limit for the first supervised parameter. See 3201 SUPERV 1 PARAM above.				
3203	**SUPERV 1 LIM HI**	**Depends on selection**	-	60.0 Hz	
	Sets the high limit for the first supervised parameter. See 3201 SUPERV 1 PARAM above.				
3204	**SUPERV 2 PARAM**	**101…199**	**1**	**104**	
	Selects the second supervised parameter. See 3201 SUPERV 1 PARAM above.				

Group 32: Supervision					
Code	**Description**	**Range**	**Resolution**	**Default**	**S**
3205	**SUPERV 2 LIM LO**	**Depends on selection**		**4.6 A**	
	Sets the low limit for the second supervised parameter. See 3204 SUPERV 2 PARAM above.				
3206	**SUPERV 2 LIM HI**	**Depends on selection**		**4.6 A**	
	Sets the high limit for the second supervised parameter. See 3204 SUPERV 2 PARAM above.				
3207	**SUPERV 3 PARAM**	**101…199**	**1**	**105**	
	Selects the third supervised parameter. See 3201 SUPERV 1 PARAM above.				
3208	**SUPERV 3 LIM LO**	**Depends on selection**		**100.0%**	
	Sets the low limit for the third supervised parameter. See 3207 SUPERV 3 PARAM above.				
3209	**SUPERV 3 LIM HI**	**Depends on selection**		**100.0%**	
	Sets the high limit for the third supervised parameter. See 3207 SUPERV 3 PARAM above.				

Group 33: Information

This group provides access to information about the drive's current programs: versions and test date.

Group 33: Information					
Code	**Description**	**Range**	**Resolution**	**Default**	**S**
3301	**FW VERSION** Contains the version of the drive's firmware.	**0000…FFFF hex**	**1**	**Firmware ver.**	
3302	**LP VERSION** Contains the version of the loading package.	**0000…FFFF hex**	**1**	**0**	
3303	**TEST DATE** Contains the test date (yy.ww).	**yy.ww**	**1**	**0**	
3304	**DRIVE RATING** Indicates the drive's current and voltage rating. The format is XXXY, where: • XXX =The nominal current rating of the drive in amps. If present, an "A" indicates a decimal point in the rating for the current. For example XXX = 8A8 indicates a nominal current rating of 8.8 Amps. • Y = The voltage rating of the drive, where Y = : • 2 indicates a 208…240 Volt rating. • 4 indicates a 380…480 Volt rating. . • 6 indicates a 500…600 Volt rating.	**-**	**-**	**-**	

Group 34: Panel Display Process Variables

This group defines the content for control panel display (middle area), when the control panel is in the output mode.

Group 34: Panel Display Process Variables					
Code	**Description**	**Range**	**Resolution**	**Default**	**S**
3401	**SIGNAL1 PARAM**	**100…199**	**1**	**103**	
	Selects the first parameter (by number) displayed on the control panel. • Definitions in this group define display content when the control panel is in the control mode. • Any Group 01 parameter number can be selected. • Using the following parameters, the display value can be scaled, converted to convenient units, and/or displayed as a bar graph. • The figure identifies selections made by parameters in this group. 100 = not selected – First parameter not displayed. 101…199 = Displays parameter 0101…0199. If parameter does not exist, the display shows "n.a.".				
3402	**SIGNAL1 MIN**	**Depends on selection**	-	**0.0 Hz**	
	Defines the minimum expected value for the first display parameter. Use parameters 3402, 3403, 3406, and 3407, for example to convert a Group 01 parameter, such as 0102 SPEED (in rpm) to the speed of a conveyor driven by the motor (in ft/min). For such a conversion, the source values in the figure are the min. and max. motor speed, and the display values are the corresponding min. and max. conveyor speed. Use parameter 3405 to select the proper units for the display. Note! Selecting units does not convert values.				
3403	**SIGNAL1 MAX**	**Depends on selection**	-	**600.0 Hz**	
	Defines the maximum expected value for the first display parameter.				
3404	**OUTPUT1 DSP FORM**	**0…9**	**1**	**9**	
	Defines the decimal point location for the first display parameter. 1…7 – Defines the decimal point location. • Enter the number of digits desired to the right of the decimal point. • See table for example using pi (3.14159). 8 = BAR METER – Specifies a bar meter display. 9 = DIRECT – Decimal point location and units of measure are identical to the source signal. See Group 01 parameter listing in "Complete Parameter List" for resolution (which indicates the decimal point location) and the units of measure.				

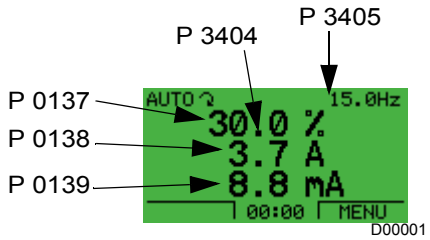

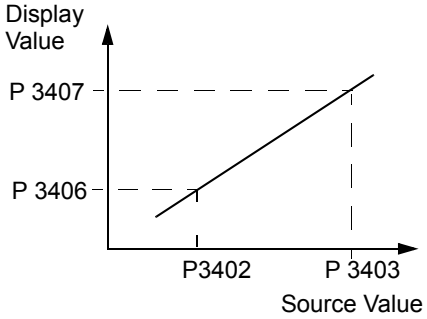

3404 Value	Display	Range
0	± 3	-32768…+32767 (Signed)
1	± 3.1	
2	± 3.14	
3	± 3.142	
4	3	0…65535 (Unsigned)
5	3.1	
6	3.14	
7	3.142	

Group 34: Panel Display Process Variables					
Code	**Description**	**Range**	**Resolution**	**Default**	**S**
3405	**OUTPUT1 DSP UNIT** Selects the units used with the first display parameter. 0 = NOT SEL, 9 = °C, 18 = MWh, 27 = ft, 36 = l/s, 45 = Pa, 54 = lb/m, 63 = Mrev 1 = A, 10 = lb ft, 19 = m/s, 28 = MGD, 37 = l/min, 46 = GPS, 55 = lb/h, 64 = d 2 = V, 11 = mA, 20 = m^3/h, 29 = inHg, 38 = l/h, 47 = gal/s, 56 = FPS, 65 = inWC 3 = Hz, 12 = mV, 21 = dm^3/s, 30 = FPM, 39 = m^3/s, 48 = gal/m, 57 = ft/s, 66 = m/min 4 = %, 13 = kW, 22 = bar, 31 = kb/s, 40 = m^3/m, 49 = gal/h, 58 = inH_2O 5 = s, 14 = W, 23 = kPa, 32 = kHz, 41 = kg/s, 50 = ft^3/s, 59 = in wg 6 = h, 15 = kWh, 24 = GPM, 33 = Ohm, 42 = kg/m, 51 = ft^3/m, 60 = ft wg 7 = rpm, 16 = °F, 25 = PSI, 34 = ppm, 43 = kg/h, 52 = ft^3/h, 61 = lbsi 8 = kh, 17 = hp, 26 = CFM, 35 = pps, 44 = mbar, 53 = lb/s, 62 = ms 117 = %ref, 119 = %dev, 121 = % SP, 123 = Iout, 125 = Fout, 127 = Vdc 118 = %act, 120 = % LD, 122 = %FBK, 124 = Vout, 126 = Tout	**0…127**	**1**	**-**	
3406	**OUTPUT1 MIN** Sets the minimum value displayed for the first display parameter.	**Depends on selection**	**1**	**-**	
3407	**OUTPUT1 MAX** Sets the maximum value displayed for the first display parameter.	**Depends on selection**	**1**	**-**	
3408	**SIGNAL 2 PARAM** Selects the second parameter (by number) displayed on the control panel. See parameter 3401.	**100…199**	**1**	**104**	
3409	**SIGNAL 2 MIN** Defines the minimum expected value for the second display parameter. See parameter 3402.	**Depends on selection**	**1**	**-**	
3410	**SIGNAL 2 MAX** Defines the maximum expected value for the second display parameter. See parameter 3403.	**Depends on selection**	**1**	**-**	
3411	**OUTPUT 2 DSP FORM** Defines the decimal point location for the second display parameter. See parameter 3404.	**0…8**	**1**	**-**	
3412	**OUTPUT 2 DSP UNIT** Selects the units used with the second display parameter. See parameter 3405.	**-128…127**	**1**	**-**	
3413	**OUTPUT 2 MIN** Sets the minimum value displayed for the second display parameter. See parameter 3406.	**Depends on selection**	**1**	**-**	
3414	**OUTPUT 2 MAX** Sets the maximum value displayed for the second display parameter. See parameter 3407.	**Depends on selection**	**1**	**-**	
3415	**SIGNAL 3 PARAM** Selects the third parameter (by number) displayed on the control panel. See parameter 3401.	**100…199**	**1**	**120**	
3416	**SIGNAL 3 MIN** Defines the minimum expected value for the third display parameter. See parameter 3402.	**Depends on selection**	**1**	**-**	
3417	**SIGNAL 3 MAX** Defines the maximum expected value for the third display parameter. See parameter 3403.	**Depends on selection**	**1**	**-**	
3418	**OUTPUT 3 DSP FORM** Defines the decimal point location for the third display parameter. See parameter 3404.	**0…8**	**1**	**-**	
3419	**OUTPUT 3 DSP UNIT** Selects the units used with the third display parameter. See parameter 3405.	**-128…127**	**1**	**-**	
3420	**OUTPUT 3 MIN** Sets the minimum value displayed for the third display parameter. See parameter 3406.	**Depends on selection**	**1**	**-**	

Group 34: Panel Display Process Variables					
Code	**Description**	**Range**	**Resolution**	**Default**	**S**
3421	**OUTPUT 3 MAX**	**Depends on selection**	**1**	**-**	
	Sets the maximum value displayed for the third display parameter. See parameter 3407.				

Group 35: Motor Temp Meas

This group defines the detection and reporting for a particular potential fault – motor overheating, as detected by a temperature sensor. Typical connections are defined below.

One Sensor

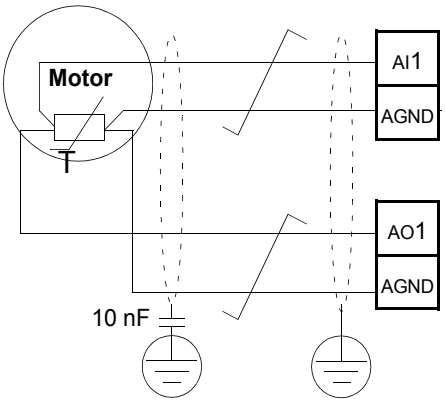

Three Sensors

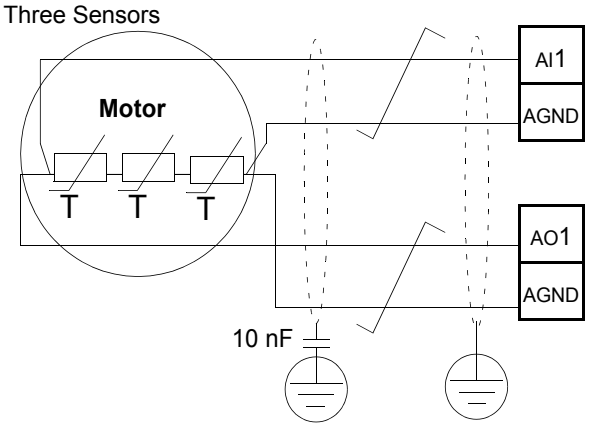

Warning! IEC 60664 requires double or reinforced insulation between live parts and the surface of accessible parts of electrical equipment which are either non-conductive or conductive but not connected to the protective earth.

To fulfil the insulation requirement, connect a thermistor (and other similar components) to the drive's control terminals using any of these alternatives:

- Separate the thermistor from live parts of the motor with double reinforced insulation.
- Protect all circuits connected to the drive's digital and analog inputs. Protect against contact, and insulate from other low voltage circuits with basic insulation (rated for the same voltage level as the drive's main circuit).
- Use an external thermistor relay. The relay insulation must be rated for the same voltage level as the drive's main circuit.

The figure below shows alternate thermistor connections. At the motor end the cable shield should be earthed through a 10 nF capacitor. If this is not possible, leave the shield unconnected.

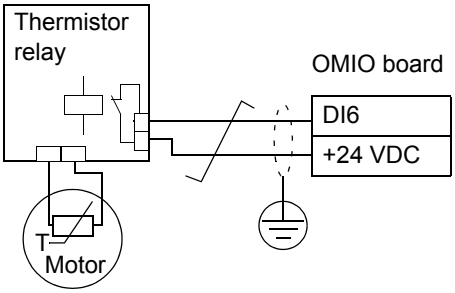

Thermistor (0)

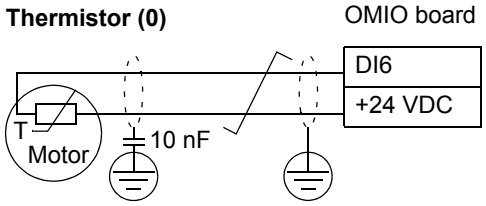

For other faults, or for anticipating motor overheating using a model, see Group 30: Fault Functions.

Group 35: Motor Temp Meas					
Code	**Description**	**Range**	**Resolution**	**Default**	**S**
3501	**SENSOR TYPE**	**0…6**	**1**	**0**	

Identifies the type of motor temperature sensor used, PT100 (°C) or PTC (ohms).

See parameters 1501 and 1507.

0 = NONE

1 = 1 x PT100 – Sensor configuration uses one PT 100 sensor.
- Analog output AO1 or AO2 feeds constant current through the sensor.
- The sensor resistance increases as the motor temperature rises, as does the voltage over the sensor.
- The temperature measurement function reads the voltage through analog input AI1 or AI2 and converts it to degrees centigrade.

2 = 2 x PT100 – Sensor configuration uses two PT 100 sensors.
- Operation is the same as for above 1 x PT100.

3 = 3 x PT100 – Sensor configuration uses three PT 100 sensors.
- Operation is the same as for above 1 x PT100.

4 = PTC – Sensor configuration uses one PTC.
- The analog output feeds a constant current through the sensor.
- The resistance of the sensor increases sharply as the motor temperature rises over the PTC reference temperature (T_{ref}), as does the voltage over the resistor. The temperature measurement function reads the voltage through analog input AI1 and converts it into ohms.
- The figure shows typical PTC sensor resistance values as a function of the motor operating temperature.

Temperature	Resistance
Normal	0 … 1.5 kohm
Excessive	≥ 4 kohm

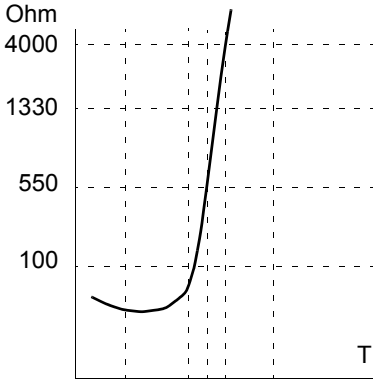

Group 35: Motor Temp Meas					
Code	**Description**	**Range**	**Resolution**	**Default**	**S**
	5 = THERMISTOR (0) – Sensor configuration uses a thermistor. • Motor thermal protection is activated through a digital input. Connect either a PTC sensor or a normally closed thermistor relay to a digital input. The drive reads the digital input states as shown in the above table. • When the digital input is '0' the motor is overheated. • See the figures in the introduction to this Group. 6 = THERMISTOR (1) – Sensor configuration uses a thermistor. • Motor thermal protection is activated through a digital input. Connect a normally open thermistor relay to a digital input. The drive reads the digital input states as shown in the above table. • When the digital input is '1' the motor is overheated. See the figures in the introduction to this Group.				
3502	**INPUT SELECTION**	**1…8**	**1**	**1**	
	Defines the input used for the temperature sensor. 1 = AI1 – PT100 and PTC. 2 = AI2 – PT100 and PTC. 3…8 = DI1…DI6 – Thermistor				
3503	**ALARM LIMIT**	**-10...200 °C / 0...5000 Ohm / 0…1**	**1**	**110 °C / 1500 Ohm / 0**	
	Defines the alarm limit for motor temperature measurement. • At motor temperatures above this limit, the drive displays an alarm (2010, MOTOR OVERTEMP) For thermistors: 0 = de-activated 1 = activated				
3504	**FAULT LIMIT**	**-10...200 °C / 0...5000 Ohm / 0…1**	**1**	**130 °C / 4000 Ohm / 0**	
	Defines the fault limit for motor temperature measurement. • At motor temperatures above this limit, the drive displays a fault (9, MOTOR OVERTEMP) and stops the drive. For thermistors: 0 = de-activated 1 = activated				

Group 36: Timer Functions

This group defines the timer functions. The timer functions include:

- Four daily start and stop times.
- Four weekly start, stop and boost times.
- Four timers for collecting selected periods together.

A timer can be connected to multiple time periods and a time period can be in multiple timers.

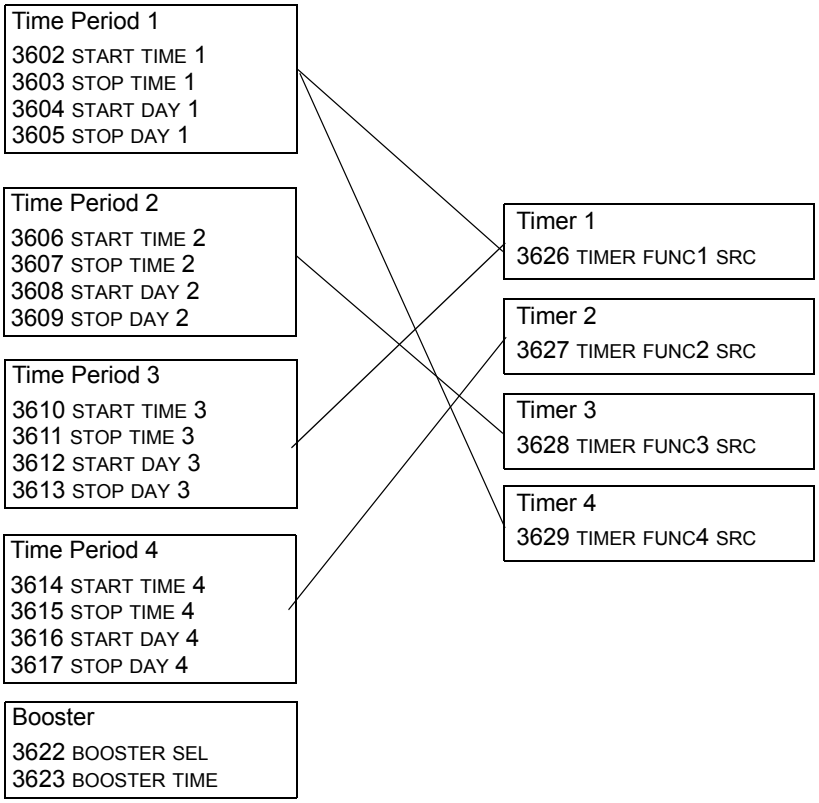

A parameter can be connected to only one time.

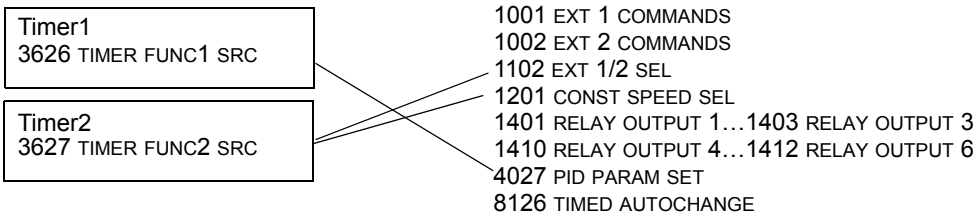

Group 36: Timer Functions					
Code	**Description**	**Range**	**Resolution**	**Default**	**S**
3601	**TIMERS ENABLE**	**-6…7**	**1**	**0**	
	Selects the source for the timer enable signal. 0 = NOT SEL – Timed functions are disabled. 1 = DI1- Defines digital input DI1 as the timed function enable signal. • The digital input must be activated for timed functions enable. 2…6 = DI2…DI6 – Defines digital input DI2…DI6 as the timed function enable signal. 7 = ENABLED – Timed functions are enabled. -1 = DI1(INV) – Defines an inverted digital input DI1 as the timed function enable signal. • This digital input must be de-activated for timed function enable. -2…-6 = DI2(INV)…DI6(INV) – Defines an inverted digital input DI2…DI6 as the timed function enable signal.				
3602	**START TIME 1**	**00:00:00…23:59:58**	**2 s**	**12:00:00**	
	Defines the daily start time. • The time can be changed in steps of 2 seconds. • If parameter value is 07:00:00, then the period will be activated at 7 a.m. • The figure shows multiple periods on different weekdays. When editing parameters to set times: • Use arrow keys to select desired hour setting. • Press NEXT to advance to minutes. • Use arrow keys to select desired minutes setting. • Press NEXT to advance to minutes. • Use arrow keys to select desired seconds setting. • Press SAVE. 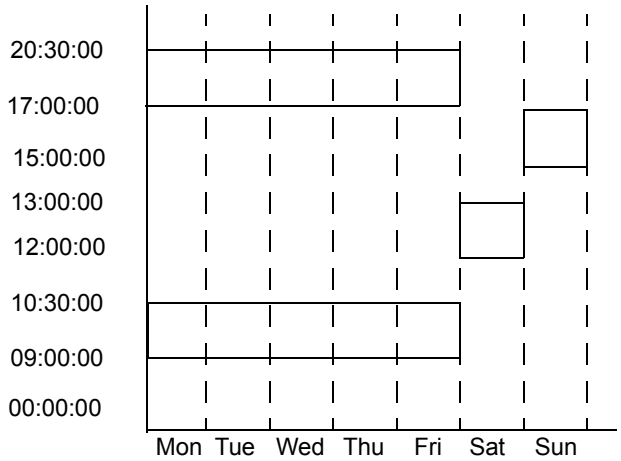 				
3603	**STOP TIME 1**	**00:00:00…23:59:58**	**2 s**	**12:00:00**	
	Defines the daily stop time. • The time can be changed in steps of 2 seconds. • If the parameter value is 09:00:00, then the period will be deactivated at 9 a.m.				
3604	**START DAY 1**	**1…7**	**1**	**1**	
	Defines the weekly start day. 1 = Monday…7 = Sunday. • If parameter value is 1, then period 1 weekly is active from Monday midnight (00:00:00).				
3605	**STOP DAY 1**	**1…7**	**1**	**1**	
	Defines weekly stop day. 1 = Monday…7 = Sunday. • If parameter value is 5, then timer 1 weekly will be deactivated on Friday midnight (23:59:58).				
3606	**START TIME 2**	**00:00:00…23:59:58**	**2 s**	**12:00:00**	
	Defines timer2 daily start time. • See parameter 3602				
3607	**STOP TIME 2**	**00:00:00…23:59:58**	**2 s**	**12:00:00**	
	Defines timer2 daily stop time. • See parameter 3603				
3608	**START DAY 2**	**1…7**	**1**	**1**	
	Defines timer 2 weekly start day. • See parameter 3604				

Group 36: Timer Functions					
Code	**Description**	**Range**	**Resolution**	**Default**	**S**
3609	**STOP DAY 2** Defines timer 2 weekly stop day. • See parameter 3605	**1…7**	**1**	**1**	
3610	**START TIME 3** Defines timer 3 daily start time. • See parameter 3602	**00:00:00…23:59:58**	**2 s**	**12:00:00**	
3611	**STOP TIME 3** Defines timer 3 daily stop time. • See parameter 3603	**00:00:00…23:59:58**	**2 s**	**12:00:00**	
3612	**START DAY 3** Defines timer 3 weekly start day. • See parameter 3604	**1…7**	**1**	**1**	
3613	**STOP DAY 3** Defines timer 3 weekly stop day. • See parameter 3605	**1…7**	**1**	**1**	
3614	**START TIME 4** Defines timer 4 daily start time. • See parameter 3602	**00:00:00…23:59:58**	**2 s**	**12:00:00**	
3615	**STOP TIME 4** Defines timer 4 daily stop time. • See parameter 3603	**00:00:00…23:59:58**	**2 s**	**12:00:00**	
3616	**START DAY 4** Defines timer 4 weekly start day. • See parameter 3604	**1…7**	**1**	**1**	
3617	**STOP DAY 4** Defines timer 4 weekly stop day. • See parameter 3605	**1…7**	**1**	**1**	
3622	**BOOSTER SEL** Selects the source for the booster signal. 0 = NOT SEL – Booster signal is disabled. 1 = DI1 – Defines DI1 as the booster signal. 2…6 = DI2…DI6 – Defines DI2…DI6 as the booster signal. -1 = DI1(INV) – Defines an inverted digital input DI1 as the booster signal. -2…-6 = DI2(INV)…DI6(INV) – Defines an inverted digital input DI2…DI6 as the booster signal.	**-6…6**	**1**	**0**	
3623	**BOOSTER TIME** Defines the booster ON time. Time is started when booster sel signal is released. If parameter range is 01:30:00, then booster is active for 1 hour and 30 minutes after activation DI is released. 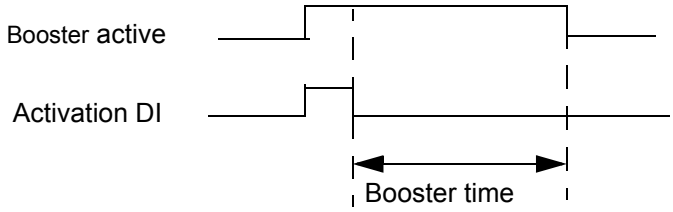 	**00:00:00-23:59:58**	**2 s**	**00:00:00**	

Group 36: Timer Functions					
Code	**Description**	**Range**	**Resolution**	**Default**	**S**
3626	**TIMER 1 SRC** Defines the time periods used by the timer. 0 = NOT SEL- No timers have been selected. 1 = P1 – Time Period 1 selected in the timer. 2 = P2 – Time Period 2 selected in the timer. 3 = P2 + P1 – Time Periods 1 and 2 selected in the timer. 4 = P3 – Time Period 3 selected in the timer. 5 = P3 + P1 – Time Periods 1 and 3 selected in the timer. 6 = P3 + P2 – Time Periods 2 and 3 selected in the timer. 7 = P3 + P2 + P1 – Time Periods 1, 2 and 3 selected in the timer. 8 = P4 – Time Period 4 selected in the timer. 9 = P4 + P1 – Time Periods 4 and 1 selected in the timer. 10 = P4 + P2 – Time Periods 4 and 2 selected in the timer. 11 = P4 + P2 + P1 – Time Periods 4, 2 and 1 selected in the timer. 12 = P4 + P3 – Time Periods 4 and 3 selected in the timer. 13 = P4 + P3 + P1 – Time Periods 4, 3 and 1 selected in the timer. 14 = P4 + P3 + P2 – Time Periods 4, 3 and 2 selected in the timer. 15 = P4 + P3 + P2 + P1 – Time Periods 4, 3, 2 and 1 selected in the timer. 16 = BOOSTER (B) – Booster selected in the timer. 17 = B + P1 – Booster and Time Period 1 selected in the timer. 18 = B + P2 – Booster and Time Period 2 selected in the timer. 19 = B + P2 + P1 – Booster and Time Periods 1 and 2 selected in the timer. 20 = B + P3 – Booster and Time Period 3 selected in the timer function. 21 = B + P3 + P1 – Booster and Time Period 3 and 1 selected in the timer. 22 = B + P3 + P2 – Booster and Time Periods 3 and 2 selected in the timer. 23 = B + P3 + P2 + P1 – Booster and Time Periods 3, 2 and 1 selected in the timer. 24 = B + P4 – Booster and Time Periods 4 selected in the timer. 25 = B + P4 + P1 – Booster and Time Period 4 and Timer 1 selected in the timer. 26 = B + P4 + P2 – Booster and Time Period 4 and 2 selected in the timer. 27 = B + P4 + P2 + P1 – Booster and Time Periods 4, 2 and 1 selected in the timer. 28 = B + P4 + P3 – Booster and Time Periods 4 and 3. 29 = B + P4 + P3 + P1 – Booster and Time Periods 4, 3 and 1 selected in the timer. 30 = B + P4 + P3 + P2 – Booster and Time Periods 4, 3 and 2 selected. 31 = B + P4 + P3 + P2 + P1 – Booster and Time Periods 4, 3, 2 and 1 selected.	**0…31**	**1**	**0**	
3627	**TIMER 2 SRC** • See parameter 3626.	**0…31**	**1**	**0**	
3628	**TIMER 3 SRC** • See parameter 3626.	**0…31**	**1**	**0**	
3629	**TIMER 4 SRC** • See parameter 3626.	**0…31**	**1**	**0**	

Group 40: Process PID Set 1

This group defines a set of parameters used with the Process PID (PID1) controller.

Typically only parameters in this group are needed.

PID Controller – Basic Set-up

In PID control mode, the drive compares a reference signal (setpoint) to an actual signal (feedback), and automatically adjusts the speed of the drive to match the two signals. The difference between the two signals is the error value.

Typically PID control mode is used, when the speed of a fan or pump needs to be controlled based on pressure, flow or temperature. In most cases – when there is only 1 transducer signal wired to the ACH550 – only parameter group 40 is needed.

A Schematic of setpoint/feedback signal flow using parameter group 40 is presented.

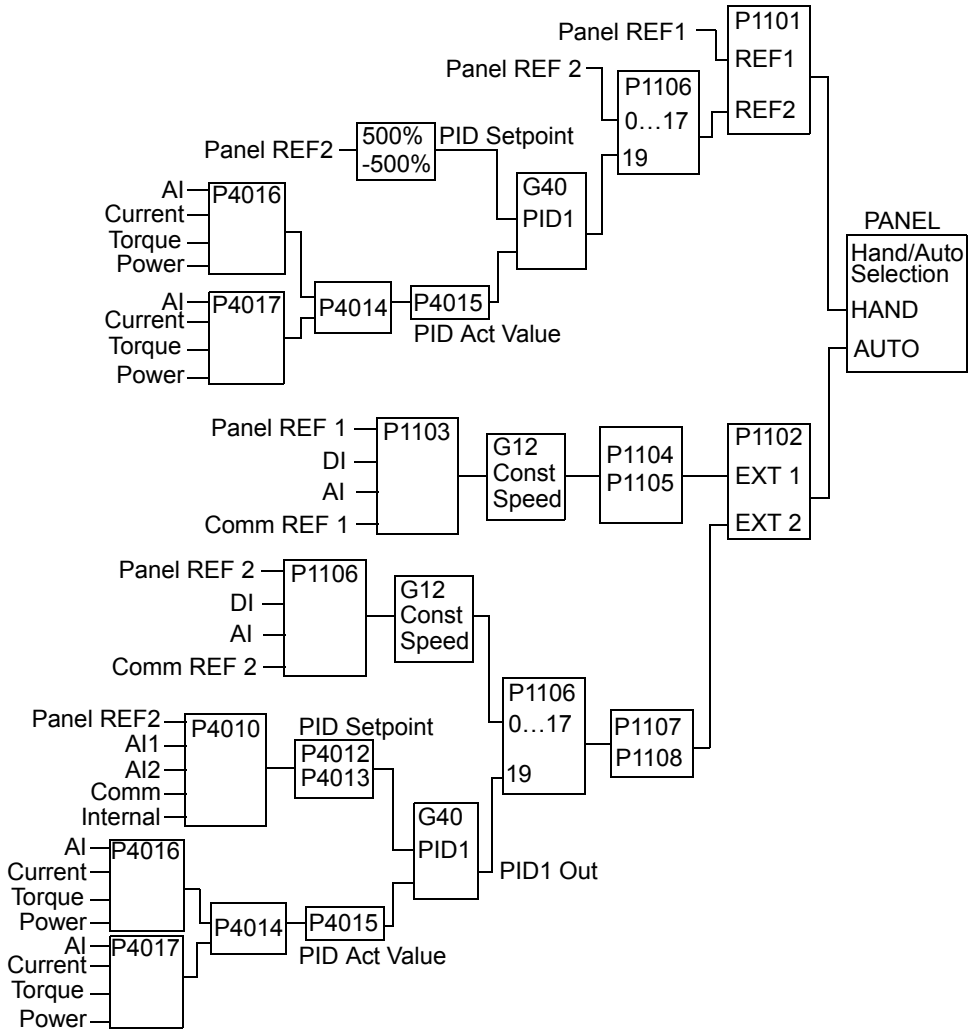

Note! In order to activate and use the PID controller Parameter 1106 must be set to value 19.

PID Controller – Advanced

ACH550 has 2 separate PID Controllers:

- Process PID (PID1) and
- External PID (PID2)

Process PID (PID1) has 2 separate sets of parameters:

- Process PID (PID1) SET1, defined in Group 40 and
- Process PID (PID1) SET2, defined in Group 41

You can select between the 2 different sets by using parameter 4027.

Typically two different PID-Controller sets are used when the load of the motor changes considerably from one situation to another.

You can use External PID (PID2), defined in Group 42, in 2 different ways:

- Instead of using additional PID-controller hardware, you can set outputs of the ACH550 to control a field instrument like a damper or a valve. In this case, set Parameter 4230 to value 0. (0 is the default value.)
- You can use External PID (PID2) as an additional PID-controller to Process PID (PID1) to trim or fine-tune the speed of the ACH550.

An example of the trimming is a return fan that follows the speed of the supply fan. As the return fan needs to run faster or slower then the supply fan in order to create under- or overpressure, correction factors to the supply fan speed are needed. Use External PID (PID2) in the return fan drive to provide these corrections.

Group 40: Process PID Set 1					
Code	**Description**	**Range**	**Resolution**	**Default**	**S**
4001	**GAIN**	**0.1…100.0**	**0.1**	**2.5**	
	Defines the PID Controller's gain. • The setting range is 0.1… 100. • At 0.1, the PID Controller output changes one-tenth as much as the error value. • At 100, the PID Controller output changes one hundred times as much as the error value. Use the proportional gain and integration time values to adjust the responsiveness of the system. • A low value for proportional gain and a high value for integral time ensures stable operation, but provides sluggish response. If the proportional gain value is too large or the integral time too short, the system can become unstable. **Procedure:** • Initially, set: • 4001 GAIN = 0.1. • 4002 INTEGRATION TIME = 20 seconds. • Start the system and see if it reaches the set point quickly while maintaining stable operation. If not, increase GAIN (4001) until the actual signal (or drive speed) oscillates constantly. It may be necessary to start and stop the drive to induce this oscillation. • Reduce GAIN (4001) until the oscillation stops. • Set GAIN (4001) to 0.4 to 0.6 times the above value. • Decrease the INTEGRATION TIME (4002) until the feedback signal (or drive speed) oscillates constantly. It may be necessary to start and stop the drive to induce this oscillation. • Increase INTEGRATION TIME (4002) until the oscillation stops. • Set INTEGRATION TIME (4002) to 1.15 to 1.5 times the above value. • If the feedback signal contains high frequency noise, increase the value of Parameter 1303 FILTER AI1 or 1306 FILTER AI2 until the noise is filtered from the signal.				

Group 40: Process PID Set 1					
Code	**Description**	**Range**	**Resolution**	**Default**	**S**
4002	**INTEGRATION TIME**	**0.0…3600.0 s**	**0.1 s**	**60.0 s**	
	Defines the PID Controller's integration time. Integration time is, by definition, is the time required to increase the output by the error value: • Error value is constant and 100%. • Gain = 1. • Integration time of 1 second denotes that a 100% change is achieved in 1 second. 0.0 = NOT SEL – Disables integration (I-part of controller). 0.1…3600.0 = Integration time (seconds). See 4001 for adjustment procedure. 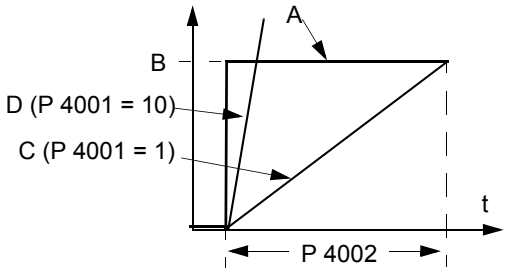 A = Error B = Error value step C = Controller output with Gain = 1 D = Controller output with Gain = 10				
4003	**DERIVATION TIME**	**0.0…10.0 s**	**0.1 s**	**0.0 s**	
	Defines the PID Controller's derivation time. • You can add the derivative of the error to the PID controller output. The derivative is the error value's rate of change. For example, if the process error value changes linearly, the derivative is a constant added to the PID controller output. • The error-derivative is filtered with a 1-pole filter. The time constant of the filter is defined by parameter 4004 PID DERIV FILTER. 0.0 = NOT SEL – Disables the error-derivative part of the PID controller output 0.1…10.0 = Derivation time (seconds) 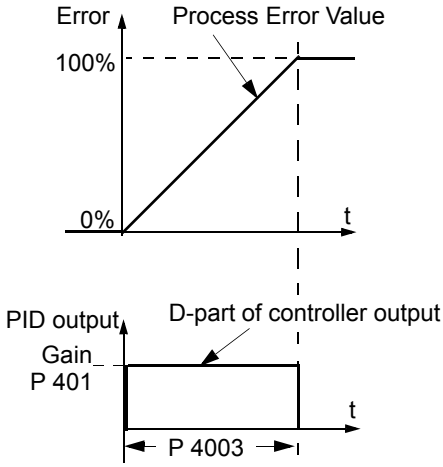 				
4004	**PID DERIV FILTER**	**0.0…10.0 s**	**0.1 s**	**1.0 s**	
	Defines the filter time constant for the error-derivative part of the PID controller output. • Before being added to the PID controller output, the error-derivative is filtered with a 1-pole filter. • Increasing the filter time smooths the error-derivative, reducing noise. 0.0 = NOT SEL – Disables the error-derivative filter. 0.1…10.0 = Filter time constant (seconds).				
4005	**ERROR VALUE INV**	**0, 1**	**-**	**0**	
	Selects either a normal or inverted relationship between the feedback signal and the drive speed. 0 = NO – Normal, a decrease in feedback signal increases drive speed. Error = Ref - Fbk 1 = YES – Inverted, a decrease in feedback signal decreases drive speed. Error = Fbk - Ref				
4006	**UNITS**	**0…31**	**-**	**4**	
	Selects the unit for the PID controller actual values. (PID1 parameters 0128, 0130, and 0132). • See parameter 3405 for list of available units.				
4007	**UNIT SCALE**	**0…4**	**1**	**1**	
	Defines the decimal point location in PID controller actual values. • Enter the decimal point location counting in from the right of the entry. • See table for example using pi (3.14159).				

4007 Value	Entry	Display
0	0003	3
1	0031	3.1
2	0314	3.14
3	3142	3.142

Group 40: Process PID Set 1					
Code	**Description**	**Range**	**Resolution**	**Default**	**S**
4008	**0 % VALUE**	**-1000.0…1000.0%**	**0.1%**	**0.0%**	
	Defines (together with the next parameter) the scaling applied to the PID controller's actual values (PID1 parameters 0128, 0130, and 0132). • Units and scale are defined by parameters 4006 and 4007.				
4009	**100 % VALUE**	**-1000.0…1000.0%**	**0.1%**	**100.0%**	
	Defines (together with the previous parameter) the scaling applied to the PID controller's actual values. • Units and scale are defined by parameters 4006 and 4007.				
4010	**SET POINT SEL**	**0…19**	**1**	**1**	✓
	Defines the reference signal source for the PID controller. • Parameter has no significance when the PID regulator is by-passed (see 8121 REG BYPASS CTRL). 0 = KEYPAD – Control panel provides reference. 1 = AI1 – Analog input 1 provides reference. 2 = AI2 – Analog input 2 provides reference. 8 = COMM – Fieldbus provides reference. 9 = COMM + AI1 – Defines a fieldbus and analog input 1 (AI1) combination as the reference source. See Analog Input Reference Correction below. 10 = COMM * AI1 – Defines a fieldbus and analog input 1 (AI1) combination as the reference source. See Analog Input Reference Correction below. 11 = DI3U, 4D(RNC) – Digital inputs, acting as a motor potentiometer control, provide reference. • DI3 increases the speed (the U stands for "up") • DI4 decreases the reference (the D stands for "down"). • Parameter 2205 ACCELER TIME 2 controls the reference signal's rate of change. • R = Stop command resets the reference to zero. • NC = Reference value is not copied. 12 = DI3U, 4D(NC) – Same as DI3U, 4D(RNC) above, except: • Stop command does not reset reference to zero. At restart the motor ramps up, at the selected acceleration rate, to the stored reference. 13 = DI5U, 6D(NC) – Same as DI3U, 4D(NC) above, except: • Uses digital inputs DI5 and DI6. 14 = AI1 + AI2 – Defines an analog input 1 (AI1) and analog input 2 (AI2) combination as the reference source. See Analog Input Reference Correction below. 15 = AI1 * AI2 – Defines an analog input 1 (AI1) and analog input 2 (AI2) combination as the reference source. See Analog Input Reference Correction below. 16 = AI1 - AI2 – Defines an analog input 1 (AI1) and analog input 2 (AI2) combination as the reference source. See Analog Input Reference Correction below. 17 = AI1/AI2 – Defines an analog input 1 (AI1) and analog input 2 (AI2) combination as the reference source. See Analog Input Reference Correction below. 19 = INTERNAL – A constant value set using parameter 4011 provides reference.				

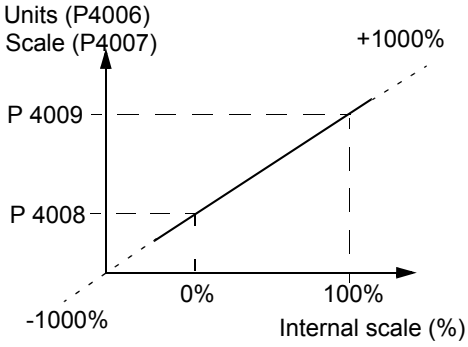

Group 40: Process PID Set 1

Code	Description	Range	Resolution	Default	S

Analog Input Reference Correction

Parameter values 9, 10, and 14…17 use the formula in the following table.

Value Setting	AI reference is calculated as following:
C + B	C value + (B value - 50% of reference value)
C * B	C value * (B value / 50% of reference value)
C - B	(C value + 50% of reference value) - B value
C / B	(C value * 50% of reference value) / B value

Where:
- C = Main Reference value (= COMM for values 9, 10 and = AI1 for values 14…17).
- B = Correcting reference (= AI1 for values 9, 10 and = AI2 for values 14…17).

Example:
The figure shows the reference source curves for value settings 9, 10, and 14…17, where:
- C = 25%.
- P 4012 SETPOINT MIN = 0.
- P 4013 SETPOINT MAX = 0.
- B varies along the horizontal axis.

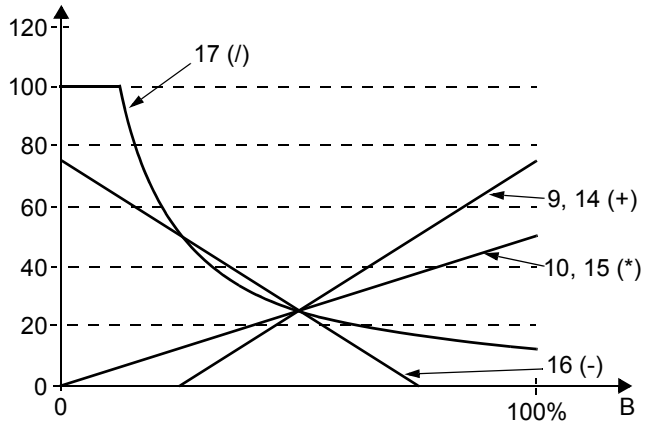

Code	Description	Range	Resolution	Default	S
4011	**INTERNAL SETPNT**	**-1000.0…1000.0%**	**0.1%**	**40.0%**	

Sets a constant value used for the process reference.
- Units and scale are defined by parameters 4006 and 4007.

Code	Description	Range	Resolution	Default	S
4012	**SETPOINT MIN**	**-500.0%…500.0%**	**0.1%**	**0.0%**	

Sets the minimum value for the reference signal source. See parameter 4010.

Code	Description	Range	Resolution	Default	S
4013	**SETPOINT MAX**	**-500.0%…500.0%**	**0.1%**	**100.0%**	

Sets the maximum value for the reference signal source. See parameter 4010.

Code	Description	Range	Resolution	Default	S
4014	**FBK SEL**	**1…10**	**1**	**1**	

Defines the PID controller feedback (actual signal).
- You can define a combination of two actual values (ACT1 and ACT2) as the feedback signal.
- Use parameter 4016 to define the source for actual value 1 (ACT1).
- Use parameter 4017 to define the source for actual value 2 (ACT2).

1 = ACT1 – Actual value 1 (ACT1) provides the feedback signal.
2 = ACT1-ACT2 – ACT1 minus ACT2 provides the feedback signal.
3 = ACT1+ACT2 – ACT1 plus ACT2 provides the feedback signal.
4 = ACT1*ACT2 – ACT1 times ACT2 provides the feedback signal.
5 = ACT1/ACT2 – ACT1 divided by ACT2 provides the feedback signal.
6 = MIN (A1, A2) – The smaller of ACT1 or ACT2 provides the feedback signal.
7 = MAX (A1, A2) – The greater of ACT1 or ACT2 provides the feedback signal.
8 = SQRT (A1-A2) – Square root of the value for ACT1 minus ACT2 provides the feedback signal.
9 = SQA1 + SQA2 – Square root of ACT1 plus the square root of ACT2 provides the feedback signal.
10 = SQRT (ACT1) – Square root of ACT1 provides the feedback signal.

Group 40: Process PID Set 1					
Code	**Description**	**Range**	**Resolution**	**Default**	**S**
4015	**FBK MULTIPLIER**	**-32.768…32.767**	**0.001**	**0.000**	
	Defines an extra multiplier for the PID FBK value defined by parameter 4014. • Used mainly in applications where the flow is calculated from the pressure difference. 0 = NOT USED. -32.768…32.767 = Multiplier applied to the signal defined by parameter 4014 FBK SEL. **Example:** $FBK = Multiplier \times \sqrt{A1 \angle A2}$				
4016	**ACT1 INPUT**	**1…5**	**1**	**2**	✓
	Defines the source for actual value 1 (ACT1). 1 = AI 1 – Uses analog input 1 for ACT1. 2 = AI 2 – Uses analog input 2 for ACT1. 3 = Current – Uses current for ACT1, scaled so: • Min ACT1 = 0 current • Max ACT1 = 2 x nominal current 4 = Torque – Uses torque for ACT1, scaled so: • Min ACT1 = -2 x nominal torque • Max ACT1 = 2 x nominal torque 5 = Power – Uses power for ACT1, scaled so: • Min ACT1 = -2 x nominal power • Max ACT1 = 2 x nominal power				
4017	**ACT2 INPUT**	**1…5**	**1**	**2**	✓
	Defines the source for actual value 2 (ACT2). 1 = AI 1 – Uses analog input 1 for ACT2. 2 = AI 2 – Uses analog input 2 for ACT2. 3 = Current – Uses current for ACT2, scaled so: • Min ACT2 = 0 current • Max ACT2 = 2 x nominal current 4 = Torque – Uses torque for ACT2, scaled so: • Min ACT2 = -2 x nominal torque • Max ACT2 = 2 x nominal torque 5 = Power – Uses power for ACT2, scaled so: • Min ACT2 = -2 x nominal power • Max ACT2 = 2 x nominal power				
4018	**ACT1 MINIMUM**	**-1000…1000%**	**1%**	**0%**	
	Sets the minimum value for ACT1. • Used with analog input min/max settings (e.g. 1301 MINIMUM AI1, 1302 MAXIMUM AI1). • Scales analog inputs used as actual values. • See figure: A= Normal; B = Inversion (ACT1 MINIMUM > ACT1 MAXIMUM) 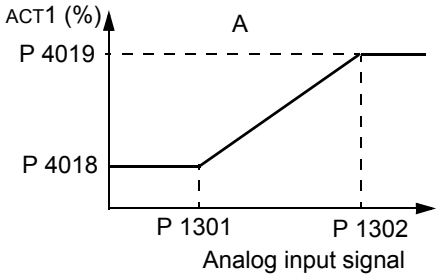 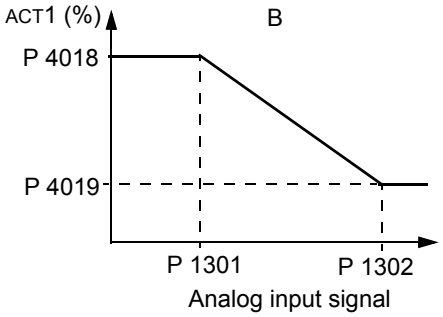				
4019	**ACT1 MAXIMUM**	**-1000…1000%**	**1%**	**100%**	
	Sets the maximum value for ACT1. • See 4018 ACT1 MINIMUM.				
4020	**ACT2 MINIMUM**	**-1000…1000%**	**1%**	**0%**	
	Sets the minimum value for ACT2. • See 4018 ACT1 MINIMUM.				

Group 40: Process PID Set 1					
Code	**Description**	**Range**	**Resolution**	**Default**	**S**
4021	**ACT2 MAXIMUM** Sets the maximum value for ACT2. • See 4018 ACT1 MINIMUM.	**-1000…1000%**	**1%**	**100%**	
4022	**SLEEP SELECTION** Defines the control for the PID sleep function. 0 = NOT SEL– Disables the PID sleep control function. 1 = DI1 – Defines digital input DI1 as the control for the PID sleep function. • Activating the digital input activates the sleep function. • De-activating the digital input restores PID control. 2…6 = DI2…DI6 – Defines digital input DI2…DI6 as the control for the PID sleep function. • See DI1 above. 7 = INTERNAL – Defines the output rpm/frequency, process reference, and process actual value as the control for the PID sleep function. Refer to parameters 4025 WAKE-UP DEV and 4023 PID SLEEP LEVEL. -1 = DI1(INV) – Defines an inverted digital input DI1 as the control for the PID sleep function. • De-activating the digital input activates the sleep function. • Activating the digital input restores PID control. -2…-6 = DI2(INV)…DI6(INV) – Defines an inverted digital input DI2…DI6 as the control for the PID sleep function. • See DI1(INV) above.	**-6…7**	**-**	**0**	
4023	**PID SLEEP LEVEL** Sets the motor speed / frequency that enables the PID sleep function – a motor speed / frequency below this level, for at least the time period 4024 PID SLEEP DELAY enables the PID sleep function (stopping the drive). • Requires 4022 = 7 INTERNAL. • See figure: A = PID output level; B = PID process feedback. 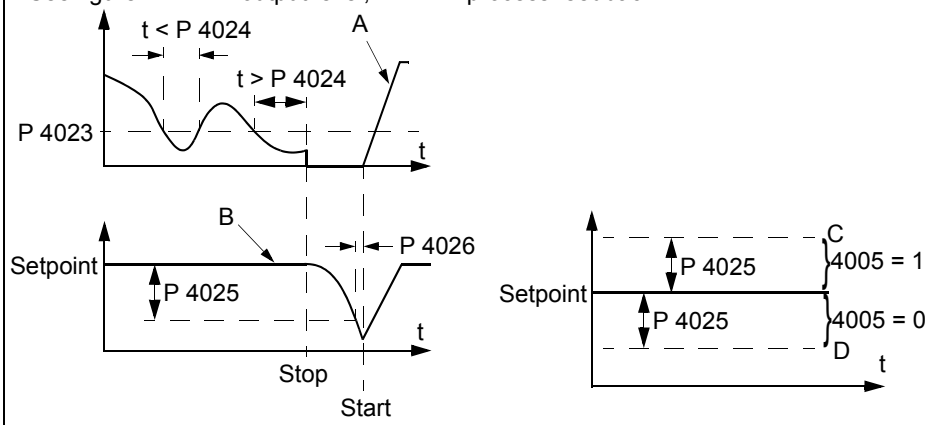 	**0.0…120.0 Hz / 0…7200 rpm**	**0.1 Hz / 1 rpm**	**0.0 Hz**	
4024	**PID SLEEP DELAY** Sets the time delay for the PID sleep function – a motor speed / frequency below 4023 PID SLEEP LEVEL for at least this time period enables the PID sleep function (stopping the drive). • See 4023 PID SLEEP LEVEL above.	**0.0…3600.0 s**	**0.1 s**	**60.0 s**	

Group 40: Process PID Set 1					
Code	**Description**	**Range**	**Resolution**	**Default**	**S**
4025	**WAKE-UP DEVIATION**	**0.0…1000%**	**0.1**	**0.0**	
	Defines the wake-up deviation – a deviation from the setpoint greater than this value, for at least the time period 4026 WAKE-UP DELAY, re-starts the PID controller. • Parameters 4006 and 4007 define the units and scale. • Parameter 4005 = 0, Wake-up level = Setpoint – Wake-up deviation. • Parameter 4005 = 1, Wake-up level = Setpoint + Wake-up deviation. • Wake-up level can be above or below setpoint. See figures: • C = Wake-up level when parameter 4005 = 1 • D = Wake-up level when parameter 4005 = 0 • E = Feedback is above wake-up level and lasts longer than 4026 WAKE-UP DELAY – PID function wakes up. • F = Feedback is below wake-up level and lasts longer than 4026 WAKE-UP DELAY – PID function wakes up. 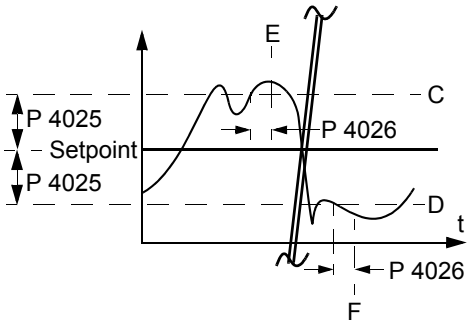				
4026	**WAKE-UP DELAY**	**0.00…60.00 s**	**0.01 s**	**0.50 s**	
	Defines the wake-up delay – a deviation from the setpoint greater than 4025 WAKE-UP DEVIATION, for at least this time period, re-starts the PID controller. • See 4023 PID SLEEP LEVEL above.				
4027	**PID 1 PARAM SET**	**-6…11**	**1**	**0**	
	Defines how selections are made between PID Set 1 and PID Set 2. PID parameter set selection. When set 1 is selected, parameters 4001…4026 are used. When set 2 is selected, parameters 4101…4126 are used. 0 = SET 1 – PID Set 1 (parameters 4001…4026) is active. 1 = DI1 – Defines digital input DI1 as the control for PID Set selection. • Activating the digital input selects PID Set 2. • De-activating the digital input selects PID Set 1. 2…6 = DI2…DI6 – Defines digital input DI2…DI6 as the control for PID Set selection. • See DI1 above. 7 = SET 2 – PID Set 2 (parameters 4101…4126) is active. 8…11 = TIMER 1…4 – Defines the Timer as the control for the PID Set selection (Timer de-activated = PID Set 1; Timer activated = PID Set 2) See parameter Group 36: Timer Functions. -1 = DI1(INV) – Defines an inverted digital input DI1 as the control for PID Set selection. • Activating the digital input selects PID Set 1. • De-activating the digital input selects PID Set 2. -2…-6 = DI2(INV)…DI6(INV) – Defines an inverted digital input DI2…DI6 as the control for PID Set selection. • See DI1(INV) above.				

Group 41: Process PID Set 2

This group defines second set of parameters used with the Process PID (PID1) controller.

The operation of parameters 4101…4126 is analogous with Process PID set 1 (PID1) parameters 4001…4026.

PID parameter set 2 can be selected by parameter 4027 PID 1 PARAM SET.

Group 41: Process PID Set 2					
Code	**Description**	**Range**	**Resolution**	**Default**	**S**
4101 … 4126	See 4001 …4026				

Group 42: External PID

This group defines the parameters used for the second PID controller (PID2) of ACH550

The operation of parameters 4201…4221 is analogous with Process PID set 1 (PID1) parameters 4001…4021.

Group 42: External PID					
Code	**Description**	**Range**	**Resolution**	**Default**	**S**
4201 … 4221	See 4001 …4021				
4228	**ACTIVATE** Defines the source for enabling the external PID function. • Requires 4230 TRIM MODE = 0 NOT SEL. 0 = NOT SEL – Disables external PID control. 1 = DI1 – Defines digital input DI1 as the control for enabling external PID control. • Activating the digital input enables external PID control. • De-activating the digital input disables external PID control. 2…6 = DI2…DI6 – Defines digital input DI2…DI6 as the control for enabling external PID control. • See DI1 above. 7 = DRIVE RUN – Defines the start command as the control for enabling external PID control. • Activating the start command (drive is running) enables external PID control. 8 = ON – Defines the power-on as the control for enabling external PID control. • Activating power to the drive enables external PID control. 9…12 = TIMER 1…4 – Defines the Timer as the control for enabling external PID control (Timer active enables external PID control). • See parameter Group 36: Timer Functions. -1 = DI1(INV) – Defines an inverted digital input DI1 as the control for enabling external PID control. • Activating the digital input disables external PID control. • De-activating the digital input enables external PID control. -2…-6 = DI2(INV)…DI6(INV) – Defines an inverted digital input DI2…DI6 as the control for enabling external PID control. • See DI1(INV) above.	**-6…12**	**-**	**0**	
4229	**OFFSET** Defines the offset for the PID output. • When PID is activated, output starts from this value. • When PID is deactivated, output resets to this value. • Parameter is not active when 4230 TRIM MODE not = 0 (trim mode is not active).	**0.0…100.0%**	**0.1%**	**0.0%**	
4230	**TRIM MODE** Selects the type of trim, if any. Using the trim it is possible to combine a corrective factor to the drive reference. 0 = NOT SEL – Disables the trim function. 1 = PROPORTIONAL – Adds a trim factor that is proportional to the rpm/Hz reference. 2 = DIRECT – Adds a trim factor based on the control loop's maximum limit.	**0…2**	**1**	**0**	
4231	**TRIM SCALE** Defines the multiplier (as a percent, plus or minus) used in the trim mode.	**-100.0%…100.0%**	**0.1%**	**0.0%**	

Group 42: External PID					
Code	**Description**	**Range**	**Resolution**	**Default**	**S**
4232	**CORRECTION SRC**	**1…2**	**1**	**1**	
	Defines the trimming reference for the correction source. 1 = PID2 REF – Uses appropriate REF MAX (SWITCH A OR B): • 1105 REF 1 MAX when REF1 is active (A). • 1108 REF 2 MAX when REF2 is active (B). 2 = PID2 OUTPUT – Uses the absolute maximum speed or frequency (Switch C): • 2002 MAXIMUM SPEED if 9904 MOTOR CONTROL MODE = 1 SPEED or 2 TORQUE. • 2008 MAXIMUM FREQUENCY IF 9904 MOTOR CONTROL MODE = 3 SCALAR.	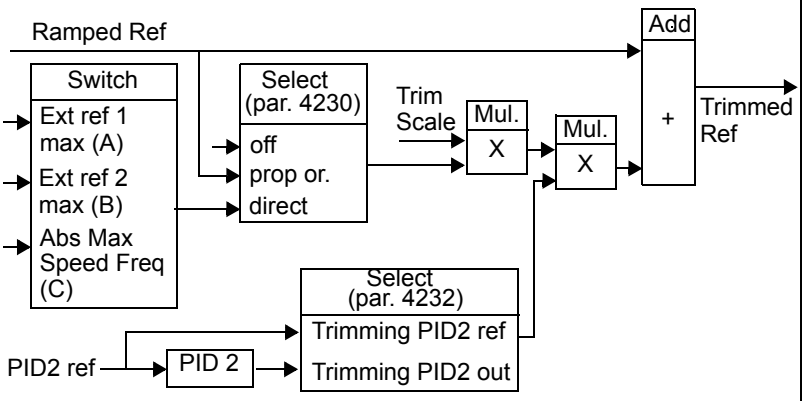			

Group 51: Ext Comm Module

This group defines set-up variables for a fieldbus adapter (FBA) communication module. For more information on these parameters, refer to the user's manual supplied with the FBA module.

Group 51: Ext Comm Module					
Code	**Description**	**Range**	**Resolution**	**Default**	**S**
5101	**FBA TYPE** Displays the type of the connected fieldbus adapter module. 0 = NOT DEFINED – Module not found, or not properly connected, or parameter 9802 is not set to 4 (EXT FBA). 1 = PROFIBUS-DP – 16 = INTERBUS – 21 = LONWORKS – 32 = CANOPEN – 37 = DEVICENET – 64 = MODBUS PLUS – 101 = CONTROLNET –	**-**	**1**	**0**	
5102 … 5126	**FB PAR 2…FB PAR 26** For more information on these parameters, refer to the user's manual supplied with the FBA module.	**0...65535**	**1**	**0**	
5127	**FBA PAR REFRESH** Validates any changed fieldbus parameter settings. • After refreshing, the value reverts automatically to DONE.	**0, 1**	**1**	**0**	
5128	**FILE CPI FW REV** Displays the CPI firmware revision of the drive's fieldbus adapter configuration file. Format is xyz where: • x = major revision number • y = minor revision number • z = correction number **Example:** 107 = revision 1.07	**0000…FFFF hex**	**1**	**0000 hex**	
5129	**FILE CONFIG ID** Displays the revision of the drive's fieldbus adapter module's configuration file identification. • File configuration information is drive application program-dependent.	**0000…FFFF hex**	**1**	**0000 hex**	
5130	**FILE CONFIG REV** Contains the revision of the drive's fieldbus adapter module configuration file. **Example:** 1 = revision 1	**0000…FFFF hex**	**1**	**0000 hex**	
5131	**FBA STATUS** Contains the status of the adapter module. 0 = IDLE – Adapter not configured. 1 = EXEC. INIT – Adapter is initializing. 2 = TIME OUT – A timeout has occurred in the communication between the adapter and the drive. 3 = CONFIG ERROR – Adapter configuration error. • The revision code of the adapter's CPI firmware revision is older than required CPI firmware version defined in the drive's configuration file (parameter 5132 < 5128). 4 = OFF-LINE – Adapter is off-line. 5 = ON-LINE – Adapter is on-line. 6 = RESET – Adapter is performing a hardware reset.	**0…6**	**1**	**0**	
5132	**FBA CPI FW REV** Contains the revision of the module's CPI program. Format is xyz where: • x = major revision number • y = minor revision number • z = correction number **Example:** 107 = revision 1.07	**0000…FFFF hex**	**1**	**0000 hex**	
5133	**FBA APPL FW REV** Contains the revision of the module's application program Format is xyz (see parameter 5132).	**0000…FFFF hex**	**1**	**0000 hex**	

Group 52: Panel Communication

This group defines the communication settings for the control panel port on the drive. Normally, when using the supplied control panel, there is no need to change settings in this group.

In this group, parameter modifications take effect on the next power-up.

Group 52: Panel Communication					
Code	**Description**	**Range**	**Resolution**	**Default**	**S**
5201	**STATION ID** Defines the address of the drive. • Two units with the same address are not allowed on-line. • Range: 1…247	**1…247**	**1**	**1**	
5202	**BAUDRATE** Defines the communication speed of the drive in kbits per second (kbits/s). 9.6 19.2 38.4 57.6 115.2	**9.6…115.2 kbits/s**	**-**	**9.6 kbits/s**	
5203	**PARITY** Sets the character format to be used with the panel communication. 0 = 8N1 – No parity, one stop bit. 1 = 8N2 – No parity, two stop bits. 2 = 8E1 – Even parity, one stop bit. 3 = 8O1 – Odd parity, one stop bit.	**0…3**	**1**	**0**	
5204	**OK MESSAGES** Contains a count of valid Modbus messages received by the drive. • During normal operation, this counter is increasing constantly.	**0…65535**	**1**	**-**	
5205	**PARITY ERRORS** Contains a count of the characters with a parity error that is received from the fieldbus. For high counts, check: • Parity settings of devices connected on the fieldbus – they must not differ. • Ambient electro-magnetic noise levels – high noise levels generate errors.	**0…65535**	**1**	**-**	
5206	**FRAME ERRORS** Contains a count of the characters with a framing error that the fieldbus receives. For high counts, check: • Communication speed settings of devices connected on the fieldbus – they must not differ. • Ambient electro-magnetic noise levels – high noise levels generate errors.	**0…65535**	**1**	**-**	
5207	**BUFFER OVERRUNS** Contains a count of the characters received that cannot be placed in the buffer. • Longest possible message length for the drive is 128 bytes. • Received messages exceeding 128 bytes overflow the buffer. The excess characters are counted.	**0…65535**	**1**	**-**	
5208	**CRC ERRORS** Contains a count of the messages with a CRC error that the drive receives. For high counts, check: • Ambient electro-magnetic noise levels – high noise levels generate errors. • CRC calculations for possible errors.	**0…65535**	**1**	**-**	

Group 53: EFB Protocol

This group defines set-up variables used for an embedded fieldbus (EFB) communication protocol. Refer to communication protocol documentation for more information on these parameters.

Group 53: EFB Control					
Code	**Description**	**Range**	**Resolution**	**Default**	**S**
5301	**EFB PROTOCOL ID**	**0000…FFFF hex**	**1**	**0000 hex**	
	Contains the identification and program revision of the protocol. • Format: XXYY, where xx = protocol ID, and YY = program revision.				
5302	**EFB STATION ID**	**0…65535**	**1**	**1**	✓
	Defines the node address of the RS485 link. • The node address on each unit must be unique.				
5303	**EFB BAUD RATE**	**1.2…76.8 kbits/s**	**-**	**9.6 kbits/s**	
	Defines the communication speed of the RS485 link in kbits per second (kbits/s). 1.2 kbits/s 2.4 kbits/s 4.8 kbits/s 9.6 kbits/s 19.2 kbits/s 38.4 kbits/s 57.6 kbits/s 76.8 kbits/s				
5304	**EFB PARITY**	**0…3**		**0**	
	Defines the data length, parity and stop bits to be used with the RS485 link communication. • The same settings must be used in all on-line stations. 0 = 8N1 – 8 data bits, No parity, one stop bit. 1 = 8N2 – 8 data bits, No parity, two stop bits. 2 = 8E1 – 8 data bits, Even parity, one stop bit. 3 = 8O1 – 8 data bits, Odd parity, one stop bit.				
5305	**EFB CTRL PROFILE**	**0…2**	**1**	**0**	
	Selects the communication 1=ACH550 profile used by the EFB protocol. 0 = ABB DRV LIM – Operation of Control/Status Words conforms to ABB Drives Profile, as used in ACH400. 1 = DCU PROFILE – Operation of Control/Status Words conforms to 32-bit DCU Profile. 2 = ABB DRV FULL – Operation of Control/Status Words conforms to ABB Drives Profile, as used in ACH600/800.				
5306	**EFB OK MESSAGES**	**0…65535**	**1**	**0**	
	Contains a count of valid messages received by the drive. • During normal operation, this counter is increasing constantly.				
5307	**EFB CRC ERRORS**	**0…65535**	**1**	**0**	
	Contains a count of the messages with a CRC error received by the drive. For high counts, check: • Ambient electro-magnetic noise levels – high noise levels generate errors. • CRC calculations for possible errors.				
5308	**EFB UART ERRORS**	**0…65535**	**1**	**0**	
	Contains a count of the messages with a character error received by the drive.				
5309	**EFB STATUS**	**0…7**	**1**	**0**	
	Contains the status of the EFB protocol. 0 = IDLE – EFB protocol is configured, but not receiving any messages. 1 = EXEC. INIT – EFB protocol is initializing. 2 = TIME OUT – A timeout has occurred in the communication between the network master and the EFB protocol. 3 = CONFIG ERROR – EFB protocol has a configuration error. 4 = OFF-LINE – EFB protocol is receiving messages that are NOT addressed to this drive. 5 = ON-LINE – EFB protocol is receiving messages that are addressed to this drive. 6 = RESET – EFB protocol is performing a hardware reset. 7 = LISTEN ONLY – EFB protocol is in listen-only mode.				

Group 53: EFB Control					
Code	**Description**	**Range**	**Resolution**	**Default**	**S**
5310	**EFB PAR 10**	**0…65535**	**1**	**0**	
	Specifies the parameter mapped to Modbus Register 40005.				
5311	**EFB PAR 11**	**0…65535**	**1**	**0**	
	Specifies the parameter mapped to Modbus Register 40006.				
5312	**EFB PAR 12**	**0…65535**	**1**	**0**	
	Specifies the parameter mapped to Modbus Register 40007.				
5313	**EFB PAR 13**	**0…65535**	**1**	**0**	
	Specifies the parameter mapped to Modbus Register 40008.				
5314	**EFB PAR 14**	**0…65535**	**1**	**0**	
	Specifies the parameter mapped to Modbus Register 40009.				
5315	**EFB PAR 15**	**0…65535**	**1**	**0**	
	Specifies the parameter mapped to Modbus Register 40010.				
5316	**EFB PAR 16**	**0…65535**	**1**	**0**	
	Specifies the parameter mapped to Modbus Register 40011.				
5317	**EFB PAR 17**	**0…65535**	**1**	**0**	
	Specifies the parameter mapped to Modbus Register 40012.				
5318	**EFB PAR 18**	**0…65535**	**1**	**0**	
	Reserved				
5319	**EFB PAR 19**	**0…0xFFFF (hex)**	**1**	**0**	
	ABB Drives profile (ABB DRV LIM or ABB DRV FULL) Control Word. Read only copy of the Fieldbus Control Word.				
5320	**EFB PAR 20**	**0…0xFFFF (hex)**	**1**	**0**	
	ABB Drives profile (ABB DRV LIM or ABB DRV FULL) Status Word. Read only copy of the Fieldbus Status Word.				

Group 81: PFA

This group defines a Pump and Fan Alternation (PFA) mode of operation. The major features of PFA are:

- The ACH550 controls the motor of pump no. 1, varying the motor speed to control the pump capacity. This motor is the speed regulated motor.
- Direct line connections power the motor of pump no. 2 and pump no.3, etc. The ACH550 switches pump no. 2 (and then pump no. 3, etc.) on and off as needed. These motors are auxiliary motors.
- The ACH550 PID control uses two signals: a process reference and an actual value feedback. The PID controller adjusts the speed (frequency) of the first pump such that the actual value follows the process reference.
- When demand (defined by the process reference) exceeds the first motor's capacity (user defined as a frequency limit), the PFA automatically starts an auxiliary pump. The PFA also reduces the speed of the first pump to account for the auxiliary pump's addition to total output. Then, as before, the PID controller adjusts the speed (frequency) of the first pump such that the actual value follows the process reference. If demand continues to increase, PFA adds additional auxiliary pumps, using the same process.
- When demand drops, such that the first pump speed falls below a minimum limit (user defined by a frequency limit), the PFA automatically stops an auxiliary pump. The PFA also increases the speed of the first pump to account for the auxiliary pump's missing output.
- An Interlock function (when enabled) identifies off-line (out of service) motors, and the PFA skips to the next available motor in the sequence.

An Autochange function (when enabled and with the appropriate switchgear) equalizes duty time between the pump motors. Autochange periodically increments the position of each motor in the rotation – the speed regulated motor becomes the last auxiliary motor, the first auxiliary motor becomes the speed regulated motor, etc.

Group 81: PFA					
Code	**Description**	**Range**	**Resolution**	**Default**	**S**
8103	**REFERENCE STEP 1**	**0.0…100.0%**	**0.1%**	**0.0%**	
	Sets a percentage value that is added to the process reference. • Applies only when at least one auxiliary (constant speed) motor is running. • Default value is 0%. Example: An ACH550 operates three parallel pumps that maintain water pressure in a pipe. • 4011 INTERNAL SETPNT sets a constant pressure reference that controls the pressure in the pipe. • The speed regulated pump operates alone at low water consumption levels. • As water consumption increases, first one constant speed pump operates, then, the second. • As flow increases, the pressure at the output end of the pipe drops relative to the pressure measured at the input end. As auxiliary motors step in to increase the flow, the adjustments below correct the reference to more closely match the output pressure. • When the first auxiliary pump operates, increase the reference with parameter 8103 REFERENCE STEP 1. • When both auxiliary pumps operate, increase the reference with parameter 8103 reference step 1 + parameter 8104 reference step 2. • When three auxiliary pumps operate, increase the reference with parameter 8103 REFERENCE STEP 1 + parameter 8104 REFERENCE STEP 2 + parameter 8105 REFERENCE STEP 3.				

Group 81: PFA					
Code	**Description**	**Range**	**Resolution**	**Default**	**S**
8104	**REFERENCE STEP 2**	**0.0…100.0%**	**0.1%**	**0.0%**	
	Sets a percentage value that is added to the process reference. • Applies only when at least two auxiliary (constant speed) motors are running. • See parameter 8103 REFERENCE STEP1.				
8105	**REFERENCE STEP 3**	**0.0…100.0%**	**0.1%**	**0.0%**	
	Sets a percentage value that is added to the process reference. • Applies only when at least three auxiliary (constant speed) motors are running. • See parameter 8103 REFERENCE STEP1.				
8109	**START FREQ 1**	**0.0…500.0 Hz**	**0.1 Hz**	**60.0 (US)**	
	Sets the frequency limit used to start the first auxiliary motor. The first auxiliary motor starts if: • No auxiliary motors are running. • ACH550 output frequency exceeds the limit: 8109 + 1 Hz. • Output frequency stays above a relaxed limit (8109 - 1 Hz) for at least the time: 8115 AUX MOT START D. After the first auxiliary motor starts: • Output frequency decreases by the value = (8109 START FREQ 1) - (8112 LOW FREQ 1). • In effect, the output of the speed regulated motor drops to compensate for the input from the auxiliary motor. See figure, where: • A = (8109 START FREQ 1) - (8112 LOW FREQ 1) • B = Output frequency increase during the start delay. • C = Diagram showing auxiliary motor's run status as frequency increases (1 = On). Note! 8109 START FREQ 1 value must be between: • 8112 LOW FREQ 1 • (2008 MAXIMUM FREQ) -1.				
8110	**START FREQ 2**	**0.0…500.0 Hz**	**0.1 Hz**	**60.0 (US)**	
	Sets the frequency limit used to start the second auxiliary motor. • See 8109 START FREQ 1 for a complete description of the operation. The second auxiliary motor starts if: • One auxiliary motor is running. • ACH550 output frequency exceeds the limit: 8110 + 1. • Output frequency stays above the relaxed limit (8110 - 1 Hz) for at least the time: 8115 AUX MOT START D.				
8111	**START FREQ 3**	**0.0…500.0 Hz**	**0.1 Hz**	**60.0 (US)**	
	Sets the frequency limit used to start the third auxiliary motor. • See 8109 START FREQ 1 for a complete description of the operation. The third auxiliary motor starts if: • Two auxiliary motors are running. • ACH550 output frequency exceeds the limit: 8111 + 1 Hz. • Output frequency stays above the relaxed limit (8111 - 1 Hz) for at least the time: 8115 AUX MOT START D.				

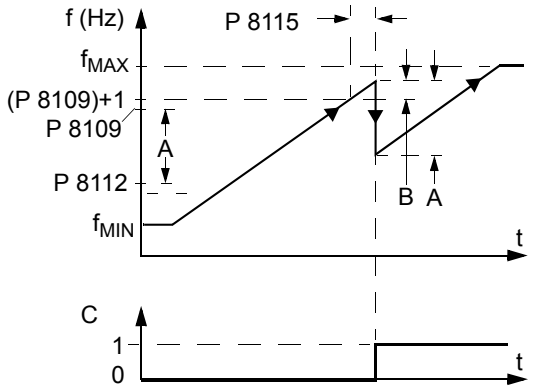

Group 81: PFA					
Code	**Description**	**Range**	**Resolution**	**Default**	**S**
8112	**LOW FREQ 1**	**0.0…500.0 Hz**	**0.1 Hz**	**30.0 (US)**	
	Sets the frequency limit used to stop the first auxiliary motor. The first auxiliary motor stops if: • The first auxiliary motor is running alone. • ACH550 output frequency drops below the limit: 8112 - 1. • Output frequency stays below the relaxed limit (8112 + 1 Hz) for at least the time: 8116 AUX MOT STOP D. After the first auxiliary motor stops: • Output frequency increases by the value = (8109 START FREQ 1) - (8112 LOW FREQ 1). • In effect, the output of the speed regulated motor increases to compensate for the loss of the auxiliary motor. See figure, where: • A = (8109 START FREQ 1) - (8112 LOW FREQ 1) • B = Output frequency decrease during the stop delay. • C = Diagram showing auxiliary motor's run status as frequency decreases (1 = On). • Grey path = Shows hysteresis – if time is reversed, the path backwards is not the same. For details on the path for starting, see the diagram at 8109 START FREQ 1. Note! Low Frequency 1 value must be between: • (2007 MINIMUM FREQ) +1. • 8109 START FREQ 1				
8113	**LOW FREQ 2**	**0.0…500.0 Hz**	**0.1 Hz**	**30.0 Hz (US)**	
	Sets the frequency limit used to stop the second auxiliary motor. • See 8112 LOW FREQ 1 for a complete description of the operation. The second auxiliary motor stops if: • Two auxiliary motors are running. • ACH550 output frequency drops below the limit: 8113 - 1. • Output frequency stays below the relaxed limit (8113 + 1 Hz) for at least the time: 8116 AUX MOT STOP D.				
8114	**LOW FREQ 3**	**0.0…500.0 Hz**	**0.1 Hz**	**30.0 Hz (US)**	
	Sets the frequency limit used to stop the third auxiliary motor. • See 8112 LOW FREQ 1 for a complete description of the operation. The third auxiliary motor stops if: • Three auxiliary motors are running. • ACH550 output frequency drops below the limit: 8114 - 1. • Output frequency stays below the relaxed limit (8114 + 1 Hz) for at least the time: 8116 AUX MOT STOP D.				
8115	**AUX MOT START D**	**0.0…3600.0 s**	**0.1 s; 1 s**	**5.0 s**	
	Sets the Start Delay for the auxiliary motors. • The output frequency must remain above the start frequency limit (parameter 8109, 8110, or 8111) for this time period before the auxiliary motor starts. • See 8109 START FREQ 1 for a complete description of the operation.				
8116	**AUX MOT STOP D.**	**0.0…3600.0 s**	**0.1 s; 1 s**	**3.0 s**	
	Sets the Stop Delay for the auxiliary motors. • The output frequency must remain below the low frequency limit (parameter 8112, 8113, or 8114) for this time period before the auxiliary motor stops. • See 8112 LOW FREQ 1 for a complete description of the operation.				

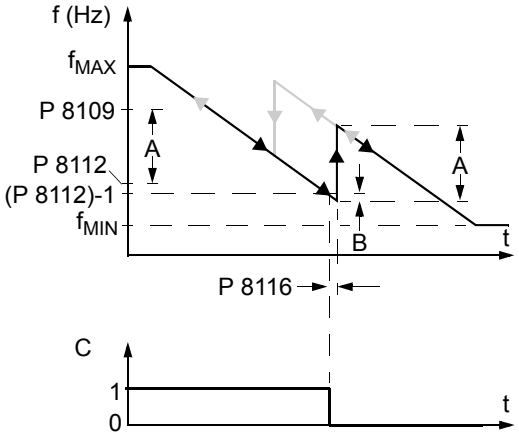

Group 81: PFA					
Code	**Description**	**Range**	**Resolution**	**Default**	**S**
8117	**NR OF AUX MOT**	**0…3**	**1**	**1**	✓

Sets the number of auxiliary motors.
- Each auxiliary motor requires a relay output, which the drive uses to send start/stop signals.
- The Autochange function, if used, requires an additional relay output for the speed regulated motor.

The following describes the set-up of the required relay outputs.

Relay Outputs

As noted above, each auxiliary motor requires a relay output, which the drive uses to send start/stop signals. The following describes how the drive keeps track of motors and relays.
- The ACH550 provides relay outputs RO1…RO3.
- An external digital output module can be added to provide relay outputs RO4…RO6.
- Parameters 1401…1403 and 1410…1412 define, respectively, how relays RO1…RO6 are used – the parameter value 31 PFA defines the relay as used for PFA.
- The ACH550 assigns auxiliary motors to relays in ascending order. If the Autochange function is disabled, the first auxiliary motor is the one connected to the first relay with a parameter setting = 31 PFA, and so on. If the Autochange function is used, the assignments rotate. Initially, the speed regulated motor is the one connected to the first relay with a parameter setting = 31 PFA, the first auxiliary motor is the one connected to the second relay with a parameter setting = 31 PFA, and so on.

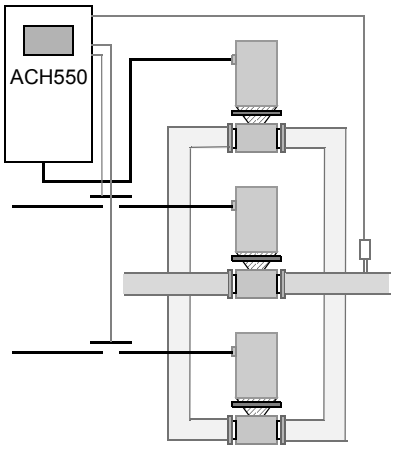

Standard PFA mode

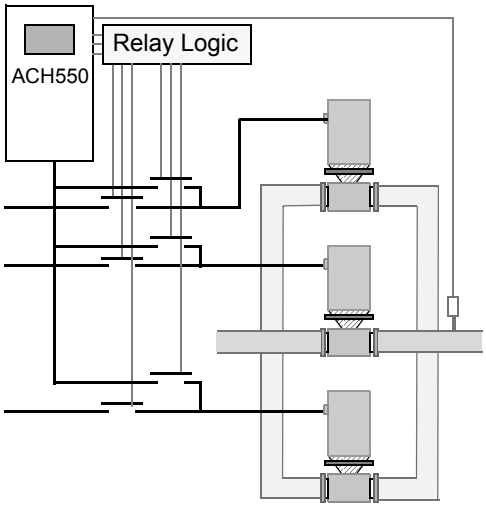

PFA with Autochange mode

- The fourth auxiliary motor uses the same reference step, low frequency and start frequency values as the third auxiliary motor.
- The table below shows the ACH550 PFA motor assignments for some typical settings in the Relay Output parameters (1401…1403 and 1410…1412), where the settings are either =31 (PFA), or =X (anything but 31), and where the Autochange function is disabled (8118 AUTOCHNG INTERV = 0).

Parameter Setting							ACH550 Relay Assignment					
							Autochange Disabled					
1401	1402	1403	1410	1411	1412	8117	RO1	RO2	RO3	RO4	RO5	RO6
31	X	X	X	X	X	1	Aux.	X	X	X	X	X
31	31	X	X	X	X	2	Aux.	Aux.	X	X	X	X
31	31	31	X	X	X	3	Aux.	Aux.	Aux.	X	X	X
X	31	31	X	X	X	2	X	Aux.	Aux.	X	X	X
X	X	X	31	X	31	2	X	X	X	Aux.	X	Aux.
31	31	X	X	X	X	1*	Aux.	Aux.	X	X	X	X

* =One additional relay output for the PFA that is in use.
One motor is in "sleep" when the other is rotating.

Group 81: PFA					
Code	**Description**	**Range**	**Resolution**	**Default**	**S**

The table below shows the ACH550 PFA motor assignments for some typical settings in the Relay Output parameters (1401…1403 and 1410…1412), where the settings are either =31 (PFA), or =X (anything but 31), and where the Autochange function is enabled (8118 AUTOCHNG INTERV = value > 0).v

Parameter Setting							ACH550 Relay Assignment					
							Autochange Enabled					
1401	1402	1403	1410	1411	1412	8117	RO1	RO2	RO3	RO4	RO5	RO6
31	31	X	X	X	X	1	PFA	PFA	X	X	X	X
31	31	31	X	X	X	2	PFA	PFA	PFA	X	X	X
x	31	31	X	X	X	1	X	PFA	PFA	X	X	X
X	X	X	31	X	31	1	X	X	X	PFA	X	PFA
31	31	X	X	X	X	0**	PFA	PFA	X	X	X	X

** = No auxiliary motors, but the autochange function is in use.
Working as standard PID-control.

8118 **AUTOCHNG INTERV** **0.0…336.0 h** **0.1 h** **0.0** ✓

Controls operation of the Autochange function and sets the interval between changes.
- The Autochange time interval only applies to the time when the speed regulated motor is running.
- See parameter 8119 AUTOCHNG LEVEL for an overview of the Autochange function.
- The drive always coasts to a stop when autochange is performed.
- Autochange enabled requires parameter 8120 INTERLOCKS = value > 0.

0.0 = NOT SEL – Disables the Autochange function.
0.1…336 = The operating time interval (the time when the start signal is on) between automatic motor changes.

Warning! When enabled, the Autochange function requires the interlocks (8120 interlocks = value > 0) enabled. During autochange the drive's power output is interrupted and the drive coasts to stop, preventing damage to the contacts.

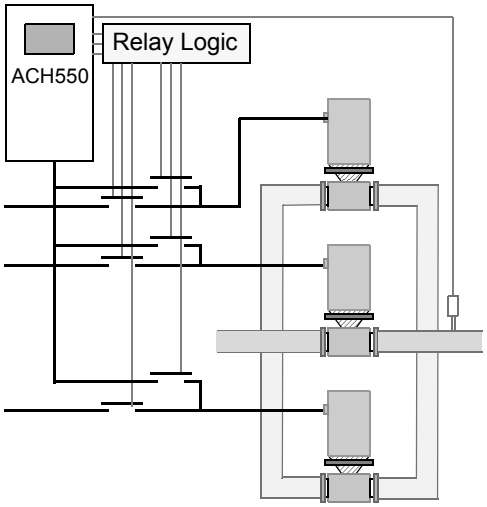

PFA with Autochange mode

8119 **AUTOCHNG LEVEL** **0.0…100.0%** **0.1%** **50.0%**

Sets an upper limit, as a percent of output capacity, for the autochange logic. When the output from the PID/PFA control block exceeds this limit, autochange is prevented. For example, use this parameter to deny autochange when the Pump-Fan system is operating near maximum capacity.

Autochange Overview

The purpose of the autochange operation is to equalize duty time between multiple motors used in a system. At each autochange operation:
- A different motor takes a turn connected to the ACH550 output – the speed regulated motor.
- The starting order of the other motors rotates.

The Autochange function requires:
- External switchgear for changing the dive's output power connections.
- Parameter 8120 INTERLOCKS = value > 0.

Autochange is performed when:
- The running time since the previous autochange reaches the time set by 8118 AUTOCHNG INTERV
- The PFA input is below the level set by this parameter, 8119 AUTOCHNG LEVEL.

Note! The ACH550 always coasts to stop when autochange is performed.

Group 81: PFA					
Code	**Description**	**Range**	**Resolution**	**Default**	**S**

In an autochange, the Autochange function does all of the following (see figure):
- Initiates a change when the running time, since the last autochange, reaches 8118 AUTOCHNG INTERV, and PFA input is below limit 8119 AUTOCHNG LEVEL.
- Stops the speed regulated motor.
- Switches off the contactor of the speed regulated motor.
- Increments the starting order counter, to change the starting order for the motors.
- Identifies the next motor in line to be the speed regulated motor.
- Switches off the above motor's contactor, if the motor was running. Any other running motors are not interrupted.
- Switches on the contactor of the new speed regulated motor. The autochange switchgear connects this motor to the ACH550 power output.
- Delays motor start for the time 8122 PFA START DELAY.
- Starts the speed regulated motor.
- Identifies the next constant speed motor in the rotation.
- Switches the above motor on, but only if the new speed regulated motor had been running (as a constant speed motor) – This step keeps an equal number of motors running before and after autochange.
- Continues with normal PFA operation.

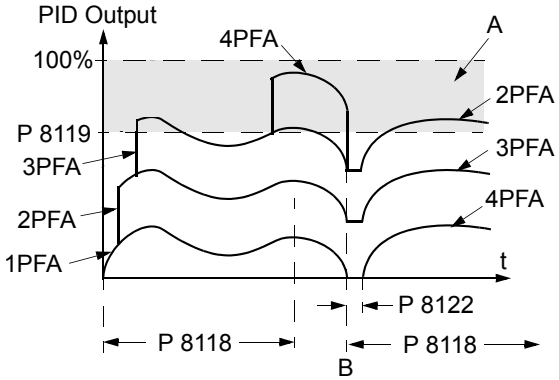

A = Area above 8119 AUTOCHNG LEVEL – autochange not allowed.
B = Autochange occurs.
1PFA, etc. = PID output associated with each motor.

Starting Order Counter

The operation of the starting-order counter:
- The relay output parameter definitions (1401…1403 and 1410…1412)) establish the initial motor sequence. (The lowest parameter number with a value 31 (PFA) identifies the relay connected to 1PFA, the first motor, and so on.)
- Initially, 1PFA = speed regulated motor, 2PFA = 1st auxiliary motor, etc.
- The first autochange shifts the sequence to: 2PFA = speed regulated motor, 3PFA = 1st auxiliary motor, …, 1PFA = last auxiliary motor.
- The next autochange shifts the sequence again, and so on.
- If the autochange cannot start a needed motor because all inactive motors are interlocked, the drive displays an alarm (2051, PFA INTERLOCK).
- When ACH550 power supply is switched off, the counter preserves the current Autochange rotation positions in permanent memory. When power is restored, the Autochange rotation starts at the position stored in memory.
- If the PFA relay configuration is changed (or if the PFA enable value is changed), the rotation is reset. (See the first bullet above.)

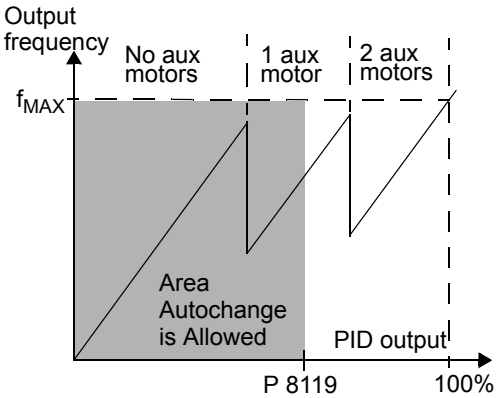

8120	**INTERLOCKS**	**0…6**	**1**	**4**	✓

Defines operation of the Interlock function. When the Interlock function is enabled:
- An interlock is active when its command signal is absent.
- An interlock is inactive when its command signal is present.
- The ACH550 will not start if a start command occurs when the speed regulated motor's interlock is active – the control panel displays an alarm (2015, PFA INTERLOCK).

Group 81: PFA					
Code	**Description**	**Range**	**Resolution**	**Default**	**S**

Wire each Interlock circuit as follows:

- Wire a contact of the motor's On/Off switch to the Interlock circuit – the drive's PFA logic can then recognize that the motor is switched off, and start the next available motor.
- Wire a contact of the motor thermal relay (or other protective device in the motor circuit) to the Interlock input – the drive's PFA logic can then recognize that a motor fault is activated and stop the motor.

0 = NOT SEL – Disables the Interlock function. All digital inputs are available for other purposes.

- Requires 8118 AUTOCHNG INTERV = 0 (The Autochange function must be disabled if Interlock function is disabled.)

1 = DI1 – Enables the Interlock function, and assigns a digital input (starting with DI1) to the interlock signal for each PFA relay. These assignments are defined in the following table and depend on:

The number of PFA relays (number of parameters 1401…1403 and 1410…1412) with value = 31 (PFA).

The Autochange function status (disabled if 8118 AUTOCHNG INTERV = 0, and otherwise enabled).

No. PFA Relays	Autochange Disabled (P 8118)	Autochange Enabled (P 8118)
0	DI1: Speed Reg Motor DI2…DI6: Free	Not allowed
1	DI1: Speed Reg Motor DI2: First PFA Relay DI3…DI6: Free	DI1: First PFA Relay DI2…DI6: Free
2	DI1: Speed Reg Motor DI2: First PFA Relay DI3: Second PFA Relay DI4…DI6: Free	DI1: First PFA Relay DI2: Second PFA Relay DI3…DI6: Free
3	DI1: Speed Reg Motor DI2: First PFA Relay DI3: Second PFA Relay DI4: Third PFA Relay DI5…DI6: Free	DI1: First PFA Relay DI2: Second PFA Relay DI3: Third PFA Relay DI4…DI6: Free
4	DI1: Speed Reg Motor DI2: First PFA Relay DI3: Second PFA Relay DI4: Third PFA Relay DI5: Fourth PFA Relay DI6: Free	DI1: First PFA Relay DI2: Second PFA Relay DI3: Third PFA Relay DI4: Fourth PFA Relay DI5…DI6: Free
5	DI1: Speed Reg Motor DI2: First PFA Relay DI3: Second PFA Relay DI4: Third PFA Relay DI5: Fourth PFA Relay DI6: Fifth PFA Relay	DI1: First PFA Relay DI2: Second PFA Relay DI3: Third PFA Relay DI4: Fourth PFA Relay DI5: Fifth PFA Relay DI6: Free
6	Not allowed	DI1: First PFA Relay DI2: Second PFA Relay DI3: Third PFA Relay DI4: Fourth PFA Relay DI5: Fifth PFA Relay DI6: Sixth PFA Relay

Group 81: PFA					
Code	**Description**	**Range**	**Resolution**	**Default**	**S**

2 = DI2 – Enables the Interlock function, and assigns a digital input (starting with DI2) to the interlock signal for each PFA relay. These assignments are defined in the following table and depend on:
- The number of PFA relays (number of parameters 1401…1403 and 1410…1412) with value = 31 (PFA).
- The Autochange function status (disabled if 8118 AUTOCHNG INTERV = 0, and otherwise enabled).

No. PFA Relays	Autochange Disabled (P 8118)	Autochange Enabled (P 8118)
0	DI1: Free DI2: Speed Reg Motor DI3…DI6: Free	Not allowed
1	DI1: Free DI2: Speed Reg Motor DI3: First PFA Relay DI4…DI6: Free	DI1: Free DI2: First PFA Relay DI3…DI6: Free
2	DI1: Free DI2: Speed Reg Motor DI3: First PFA Relay DI4: Second PFA Relay DI5…DI6: Free	DI1: Free DI2: First PFA Relay DI3: Second PFA Relay DI4…DI6: Free
3	DI1: Free DI2: Speed Reg Motor DI3: First PFA Relay DI4: Second PFA Relay DI5: Third PFA Relay DI6: Free	DI1: Free DI2: First PFA Relay DI3: Second PFA Relay DI4: Third PFA Relay DI5…DI6: Free
4	DI1: Free DI2: Speed Reg Motor DI3: First PFA Relay DI4: Second PFA Relay DI5: Third PFA Relay DI6: Fourth PFA Relay	DI1: Free DI2: First PFA Relay DI3: Second PFA Relay DI4: Third PFA Relay DI5: Fourth PFA Relay DI6: Free
5	Not allowed	DI1: Free DI2: First PFA Relay DI3: Second PFA Relay DI4: Third PFA Relay DI5: Fourth PFA Relay DI6: Fifth PFA Relay
6	Not allowed	Not allowed

Group 81: PFA					
Code	**Description**	**Range**	**Resolution**	**Default**	**S**

3 = DI3 – Enables the Interlocks function, and assigns a digital input (starting with DI3) to the interlock signal for each PFA relay. These assignments are defined in the following table and depend on:
- The number of PFA relays (number of parameters 1401…1403 and 1410…1412) with value = 31 (PFA).
- The Autochange function status (disabled if 8118 AUTOCHNG INTERV = 0, and otherwise enabled).

No. PFA Relays	Autochange Disabled (P 8118)	Autochange Enabled (P 8118)
0	DI1…DI2: Free DI3: Speed Reg Motor DI4…DI6: Free	Not allowed
1	DI1…DI2: Free DI3: Speed Reg Motor DI4: First PFA Relay DI5…DI6: Free	DI1…DI2: Free DI3: First PFA Relay DI4…DI6: Free
2	DI1…DI2: Free DI3: Speed Reg Motor DI4: First PFA Relay DI5: Second PFA Relay DI6: Free	DI1…DI2: Free DI3: First PFA Relay DI4: Second PFA Relay DI5…DI6: Free
3	DI1…DI2: Free DI3: Speed Reg Motor DI4: First PFA Relay DI5: Second PFA Relay DI6: Third PFA Relay	DI1…DI2: Free DI3: First PFA Relay DI4: Second PFA Relay DI5: Third PFA Relay DI6: Free
4	Not allowed	DI1…DI2: Free DI3: First PFA Relay DI4: Second PFA Relay DI5: Third PFA Relay DI6: Fourth PFA Relay
5…6	Not allowed	Not allowed

- INTERV = 0, and otherwise enabled).

4 = DI4 – Enables the Interlock function, and assigns a digital input (starting with DI4) to the interlock signal for each PFA relay. These assignments are defined in the following table and depend on:
- The number of PFA relays (number of parameters 1401…1403 and 1410…1412) with value = 31 (PFA).

The Autochange function status (disabled if 8118 AUTOCHNG

No. PFA Relays	Autochange Disabled (P 8118)	Autochange Enabled (P 8118)
0	DI1…DI3: Free DI4: Speed Reg Motor DI5…DI6: Free	Not allowed
1	DI1…DI3: Free DI4: Speed Reg Motor DI5: First PFA Relay DI6: Free	DI1…DI3: Free DI4: First PFA Relay DI5…DI6: Free
2	DI1…DI3: Free DI4: Speed Reg Motor DI5: First PFA Relay DI6: Second PFA Relay	DI1…DI3: Free DI4: First PFA Relay DI5: Second PFA Relay DI6: Free
3	Not allowed	DI1…DI3: Free DI4: First PFA Relay DI5: Second PFA Relay DI6: Third PFA Relay
4…6	Not allowed	Not allowed

Group 81: PFA

Code	Description	Range	Resolution	Default	S

5 = DI5 – Enables the Interlock function, and assigns a digital input (starting with DI5) to the interlock signal for each PFA relay. These assignments are defined in the following table and depend on:
- The number of PFA relays (number of parameters 1401…1403 and 1410…1412) with value = 31 (PFA).
- The Autochange function status (disabled if 8118 AUTOCHNG INTERV = 0, and otherwise enabled).

No. PFA Relays	Autochange Disabled (P 8118)	Autochange Enabled (P 8118)
0	DI1…DI4: Free DI5: Speed Reg Motor DI6: Free	Not allowed
1	DI1…DI4: Free DI5: Speed Reg Motor DI6: First PFA Relay	DI1…DI4: Free DI5: First PFA Relay DI6: Free
2	Not allowed	DI1…DI4: Free DI5: First PFA Relay DI6: Second PFA Relay
3…6	Not allowed	Not allowed

6 = DI6 – Enables the Interlock function, and assigns digital input DI6 to the interlock signal for the speed regulated motor.
- Requires 8118 AUTOCHNG INTERV = 0.

No. PFA Relays	Autochange Disabled	Autochange Enabled
0	DI1…DI5: Free DI6: Speed Reg Motor	Not allowed
1	Not allowed	DI1…DI5: Free DI6: First PFA Relay
2…6	Not allowed	Not allowed

Code	Description	Range	Resolution	Default	S
8121	**REG BYPASS CTRL**	**0…1**	**1**	**0**	

Selects Regulator by-pass control. When enabled, Regulator by-pass control provides a simple control mechanism without a PID regulator.
- Use Regulator by-pass control only in special applications.

0 = NO – Disables Regulator by-pass control. The drive uses the normal PFA reference: 1106 REF2 SELECT.

1 = YES – Enables Regulator by-pass control.
- The process PID regulator is bypassed. Actual value of PID is used as the PFA reference (input). Normally EXT REF2 is used as the PFA reference.
- The drive uses the feedback signal defined by 4014 FBK SEL (or 4114) for the PFA frequency reference.
- The figure shows the relation between the control signal 4014 FBK SEL (OR 4114) and the speed regulated motor's frequency in a three-motor system.

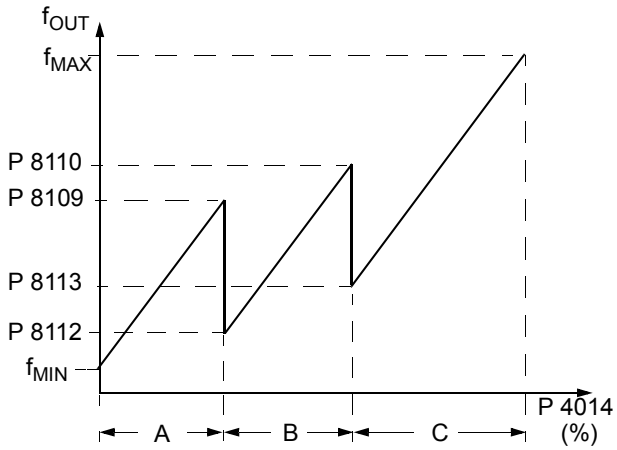

A = No auxiliary motors running
B = One auxiliary motor running
C = Two auxiliary motors running

Group 81: PFA					
Code	**Description**	**Range**	**Resolution**	**Default**	**S**
	Example: In the diagram below, the pumping station's outlet flow is controlled by the measured inlet flow (A). 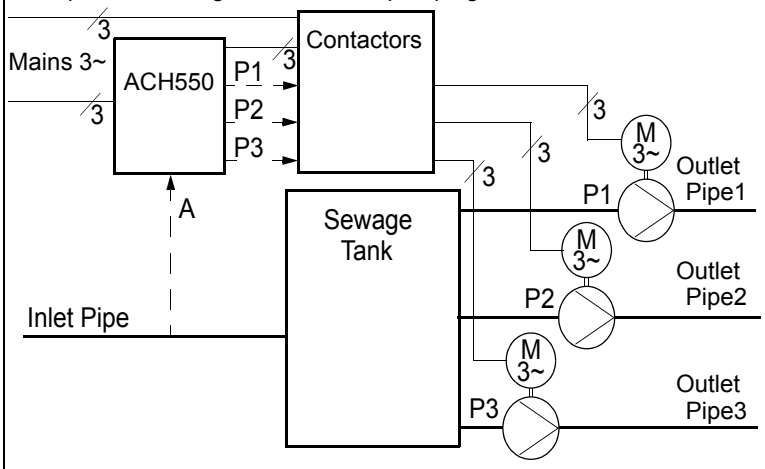				
8122	**PFA START DELAY**	**0.00…10.00 s**	**0.01 s**	**0.50 s**	
	Sets the start delay for speed regulated motors in the system. Using the delay, the drive works as follows: • Switches on the contactor of the speed regulated motor – connecting the motor to the ACH550 power output. • Delays motor start for the time 8122 PFA START DELAY. • Starts the speed regulated motor. • Starts auxiliary motors. See parameter 8115 for delay. **Warning! Motors equipped with star-delta starters require a PFA Start Delay.** • After the ACH550 relay output switches a motor On, the star-delta starter must switch to the star-connection and then back to the delta-connection before the drive applies power. • So, the PFA Start Delay must be longer than the time setting of the star-delta starter.				
8123	**PFA ENABLE**	**0…1**	**-**	**0**	✓
	Selects PFA control. When enabled, PFA control: • Switches in, or out, auxiliary constant speed motors as output demand increases or decreases. Parameters 8109 START FREQ 1 to 8114 LOW FREQ 3 define the switch points in terms of the drive output frequency. • Adjusts the speed regulated motor output down, as auxiliary motors are added, and adjusts the speed regulated motor output up, as auxiliary motors are taken off line. • Provides Interlock functions, if enabled. • Requires 9904 MOTOR CTRL MODE = 3 SCALAR. 0 = NOT SEL – Disables PFA control. 1 = ACTIVE – Enables PFA control.				
8124	**ACC IN AUX STOP**	**0.0…1800.0 s**	**0.1 s**	**0.0**	
	Sets the PFA acceleration time for a zero-to-maximum frequency ramp. This PFA acceleration ramp: • Applies to the speed regulated motor, when an auxiliary motor is switched off. • Replaces the acceleration ramp defined in Group 22: Accel / Decel. • Applies only until the output of the regulated motor increases by an amount equal to the output of the switched off auxiliary motor. Then the acceleration ramp defined in Group 22: Accel / Decel applies.				

Group 81: PFA					
Code	**Description**	**Range**	**Resolution**	**Default**	**S**
	0 = NOT SEL. 0.1…1800 = Activates this function using the value entered as the acceleration time. 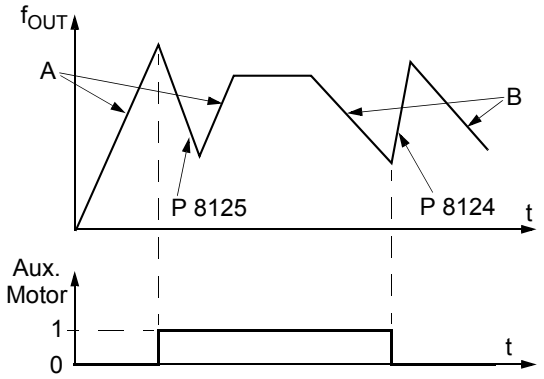 • A = speed regulated motor accelerating using Group 22 parameters (2202 or 2205). • B = speed regulated motor decelerating using Group 22 parameters (2203 or 2206). • At aux. motor start, speed regulated motor decelerates using 8125 DEC IN AUX START. • At aux. motor stop, speed regulated motor accelerates using 8124 ACC IN AUX STOP.				
8125	**DEC IN AUX START**	**0.0…1800.0 s**	**0.1 s**	**0.0 s**	
	Sets the PFA deceleration time for a maximum-to-zero frequency ramp. This PFA deceleration ramp: • Applies to the speed regulated motor, when an auxiliary motor is switched on. • Replaces the deceleration ramp defined in Group 22 ACCEL / DECEL. • Applies only until the output of the regulated motor decreases by an amount equal to the output of the auxiliary motor. Then the deceleration ramp defined in Group 22 ACCEL / DECEL applies. 0 = NOT SEL. 0.1…1800 = Activates this function using the value entered as the acceleration time.				
8126	**TIMED AUTOCHANGE**	**0…4**	**1**	**0**	
	Sets the autochange with timer. When enables, autochange is controlled with the timer functions. 0 = NOT SEL. 1 = Timer 1 – Enables autochange when Timer 1 is active. 2…4 Timer 2…4 – Enables autochange when Timer 2…4 is active.				
8127	**MOTORS**	**0…7**	**1**	**0**	✓
	Sets the actual number of PFA controlled motors (maximum 6 motors, 1 speed regulated, 3 connected direct-on-line and 3 spare motors). • This value includes also the speed regulated motor. • This value must be compatible with number of relays allocated to PFA if the autochange function is used. • If Autochange function is not used, the speed regulated motor does not need to have a relay output allocated to PFA but it needs to be included in this value.				

Group 98: Options

This group configures for options, in particular, enabling serial communication with the drive.

Group 98: Options					
Code	**Description**	**Range**	**Resolution**	**Default**	**S**
9802	**COMM PROT SEL**	**0…5**	**1**	**0**	
	Selects the communication protocol. 0 = NOT SEL – No communication protocol selected. 1 = STD MODBUS – The drive communicates with Modbus via the RS485 channel (X1-communications, terminal). • See also parameter Group 53 EFB PROTOCOL. 2 = N2 – Enables fieldbus communication with the drive using Metasys N2 protocol via the RS485 serial link (X1-communications terminal). 3 = FLN – Enables fieldbus communication with the drive using FLN protocol via the RS485 serial link (X1-communications terminal). 4 = EXT FBA – The drive communicates via a fieldbus adapter module in option slot 2 of the drive. • See also parameter Group 51 EXT COMM MODULE. 5 = BACNET – Enables fieldbus communication with the drive using BACnet protocol via the RS485 serial link (X1-communications terminal).				

Embedded Fieldbus

Overview

The ACH550 can be set up to accept control from an external system using standard serial communication protocols. When using serial communication, the ACH550 can either:

- Receive all of its control information from the fieldbus, or
- Be controlled from some combination of fieldbus control and other available control locations, such as digital or analog inputs, and the control panel.

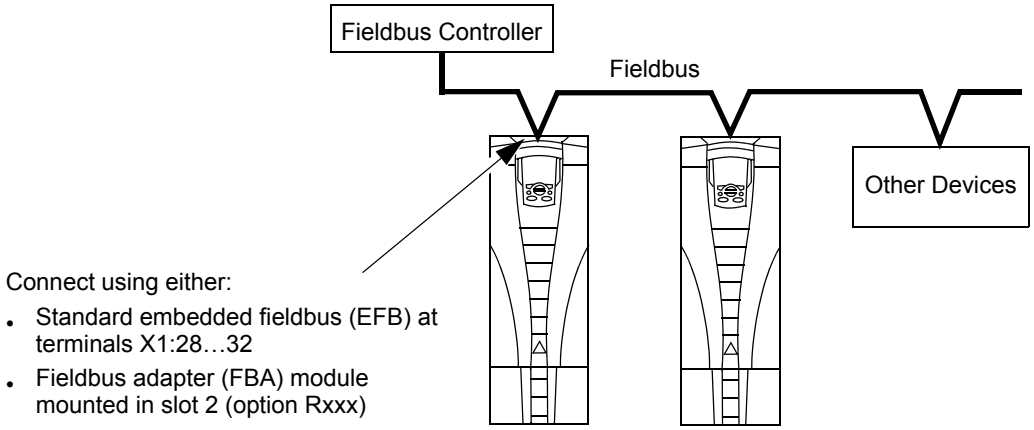

Two basic serial communications configurations are available:

- Embedded fieldbus (EFB) – Using the RS485 interface at terminals X1:28…32 on the control board, a control system can communicate with the drive using the Modbus® protocol. (For protocol and profile descriptions, see "Modbus Protocol Technical Data", "ABB Control Profiles Technical Data", etc. starting on page 166.):
  - Modbus®
  - Metasys® N2
  - APOGEE® FLN
  - BACnet®
- Fieldbus adapter (FBA) – See "Fieldbus Adapter" on page 219.

Control Interface

In general, the basic control interface between the fieldbus system and the drive consists of:

Protocol	Control Interface	Reference for more information
Modbus	• Output Words – Control word – Reference1 – Reference2 • Input Words – Status word – Actual value 1 – Actual value 2 – Actual value 3 – Actual value 4 – Actual value 5 – Actual value 6 – Actual value 7 – Actual value 8	The content of these words is defined by profiles. For details on the profiles used, see "ABB Control Profiles Technical Data"
N2	• Binary output objects • Analog output objects • Binary input objects • Analog input objects	"N2 Protocol Technical Data"
FLN	• Binary output points • Analog output points • Binary input points • Analog input points	"FLN Protocol Technical Data"
BACnet	• Device management • Binary output objects • Analog output objects • Binary input objects • Analog input objects	"BACnet Technical Data"

Note! The words "output" and "input" are used as seen from the fieldbus controller point of view. For example an output describes data flow from the fieldbus controller to the drive and appears as an input from the drive point of view.

Planning

Network planning should address the following questions:

- What types and quantities of devices must be connected to the network?
- What control information must be sent down to the drives?
- What feedback information must be sent from the drives to the controlling system?

Mechanical and Electrical Installation – EFB

Warning! Connections should be made only while the drive is disconnected from the power source.

Drive terminals 28...32 are for RS485 communications.

- Use Belden 9842 or equivalent. Belden 9842 is a dual twisted, shielded pair cable with a wave impedance of 120 Ω.
- Use one of these twisted shielded pairs for the RS485 link. Use this pair to connect all A (-) terminals together and all B (+) terminals together.
- Use one of the wires in the other pair for the logical ground (terminal 31), leaving one wire unused.
- Do not directly ground the RS485 network at any point. Ground all devices on the network using their corresponding earthing terminals.
- As always, the grounding wires should not form any closed loops, and all the devices should be earthed to a common ground.
- Connect the RS485 link in a daisy-chained bus, without dropout lines.
- To reduce noise on the network, terminate the RS485 network using 120 Ω resistors at both ends of the network. Use the DIP switch to connect or disconnect the termination resistors. See following diagram and table.

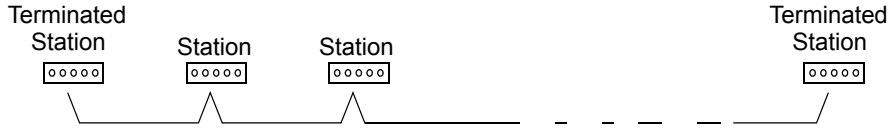

X1	Identification	Hardware Description
28	Screen	RS485 Multidrop application / RS485 interface
29	B (Positive +)	
30	A (Negative -)	
31	AGND	
32	Screen	

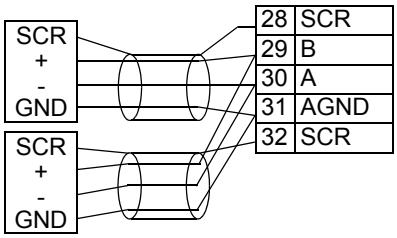

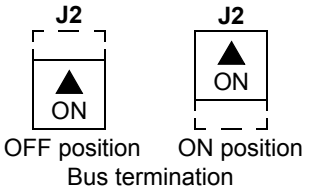

- Connect the shield at each end of the cable to a drive. On one end, connect the shield to terminal 28, and on the other end connect to terminal 32. Do not connect the incoming and outgoing cable shields to the same terminals, as that would make the shielding continuous.
- For configuration information see the following:
  - "Communication Set-up – EFB" below.
  - "Activate Drive Control Functions – EFB" on page 157.
  - The appropriate EFB protocol specific technical data. For example, "Modbus Protocol Technical Data" on page 166.

Communication Set-up – EFB

Serial Communication Selection

To activate the serial communication, set parameter 9802 COMM PROTOCOL SEL =

- 1 (STD MODBUS).
- 2 (N2)
- 3 (FLN)
- 5 (BACNET)

Note! If you cannot see the desired selection on the panel, your drive does not have that protocol software in the application memory.

Serial Communication Configuration

Setting 9802 automatically sets the appropriate default values in parameters that define the communication process. These parameters and descriptions are defined below. In particular, note that the station Id may require adjustment.

Code	Description	EFB Protocol Reference			
		Modbus	N2	FLN	BACnet
5301	EFB PROTOCOL ID Contains the identification and program revision of the protocol.	Do not edit. Any non-zero value entered for parameter 9802 COMM PROT SEL, sets this parameter automatically. The format is: XXYY, where xx = protocol ID, and YY = program revision.			
5302	EFB STATION ID Defines the node address of the RS485 link.	Set each drive on the network with a unique value for this parameter. When this protocol is selected, the default value for this parameter is: 1 **Note:** For a new address to take affect, the drive power must be cycled **OR** 5302 must first be set to 0 before selecting a new address. Leaving 5302 = 0 places the RS485 channel in reset, disabling communication.			
					Sets MS/TP MAC ID
5303	EFB BAUD RATE Defines the communication speed of the RS485 link in kbits per second (kbits/s). 1.2 kbits/s 2.4 kbits/s 4.8 kbits/s 9.6 kbits/s 19.2 kbits/s 38.4 kbits/s 57.6 kbits/s 76.8 kbits/s	When this protocol is selected, the default value for this parameter is: 9.6			When this protocol is selected, the default value for this parameter is: 9600. Do not edit.

Code	Description	EFB Protocol Reference			
		Modbus	N2	FLN	BACnet
5304	EFB PARITY Defines the data length, parity and stop bits to be used with the RS485 link communication. • The same settings must be used in all on-line stations. 0 = 8N1 – 8 data bits, No parity, one stop bit. 1 = 8N2 – 8 data bits, No parity, two stop bits. 2 = 8E1 – 8 data bits, Even parity, one stop bit. 3 = 8O1 – 8 data bits, Odd parity, one stop bit.	When this protocol is selected, the default value for this parameter is: 1	When this protocol is selected, the default value for this parameter is: 0		Sets MS/TP character format.
5305	EFB CTRL PROFILE Selects the communication profile used by the EFB protocol. 0 = ABB DRV LIM – Operation of Control/Status Words conform to ABB Drives Profile, as used in ACH400. 1 = DCU PROFILE – Operation of Control/Status Words conform to 32-bit DCU Profile. 2 = ABB DRV FULL – Operation of Control/Status Words conform to ABB Drives Profile, as used in ACH600/800.	When this protocol is selected, the default value for this parameter is: 0	N/A. When this protocol is selected, the default value for this parameter is: 0. Changing the value for this parameter has no affect on this protocol's behavior.		
5310	EFB PAR10	Not used for Comm setup.	Sets them response turnaround time in milliseconds. When this protocol is selected, the default value is:		
			3 msec.	0 msec.	5 msec.
5314	EFB PAR14		Not used.		Enables autobaud detection. 0 = DISABLE 1 = ENABLE
5315	EFB PAR15				Displays the detected baud rate when autobaud detection is used.

Note! After any changes to the communication settings, protocol must be reactivated by either cycling the drive power, or by clearing and then restoring the station Id (5302).

Activate Drive Control Functions – EFB

Controlling the Drive

Fieldbus control of various drive functions requires configuration to:

- Tell the drive to accept fieldbus control of the function.
- Define as a fieldbus input, any drive data required for control.
- Define as a fieldbus output, any control data required by the drive.

The following sections describe, at a general level, the configuration required for each control function. For the protocol-specific details, see the document supplied with the FBA module.

Start/Stop Direction Control

Using the fieldbus for start/stop/direction control of the drive requires:

- Drive parameter values set as defined below.
- Fieldbus controller supplied command(s) in the appropriate location. (The location is defined by the Protocol Reference, which is protocol dependent.)

Drive Parameter		Value	Description	Protocol Reference				
				Modbus[1]		N2	FLN	BACnet
				ABB DRV	DCU PROFILE			
1001	EXT1 COMMANDS	10 (COMM)	Start/Stop by fieldbus with Ext1 selected.	40001 bits 0…3	40031 bits 0, 1	BO1	24	BV10
1002	EXT2 COMMANDS	10 (COMM)	Start/Stop by fieldbus with Ext2 selected.	40001 bits 0…3	40031 bits 0, 1	BO1	24	BV10
1003	DIRECTION	3 (REQUEST)	Direction by fieldbus.	4002/ 4003[2]	40031 bit 3	BO2	22	BV11

1. For Modbus, the protocol reference can depend on the profile used, hence two columns in these tables. One column refers to the ABB Drives profile, selected when parameter 5305 = 0 (ABB DRV LIM) or 5305 = 2 (ABB DRV FULL). The other column refers to the DCU profile selected when parameter 5305 = 1 (DCU PROFILE). See "ABB Control Profiles Technical Data" on page 174.
2. The reference provides direction control – a negative reference provides reverse rotation.

Input Reference Select

Using the fieldbus to provide input references to the drive requires:

- Drive parameter values set as defined below.
- Fieldbus controller supplied reference word(s) in the appropriate location. (The location is defined by the Protocol Reference, which is protocol dependent.)

Drive Parameter		Value	Setting	Protocol Reference				
				Modbus		N2	FLN	BACnet
				ABB DRV	DCU PROFILE			
1102	EXT1/EXT2 SEL	8 (COMM)	Reference set selection by fieldbus.	40001 bit 11	40031 bit 5	BO5	26	BV13
1103	REF1 SEL	8 (COMM)	Input reference 1 by fieldbus.	40002		AO1	60	AV16
1106	REF2 SEL	8 (COMM)	Input reference 2 by fieldbus.	40003		AO2	61	AV17

Reference Scaling

Where required, REFERENCES can be scaled. See the following, as appropriate:

- Modbus Register "40002" in the "Modbus Protocol Technical Data" section.
- "Reference Scaling" in the "ABB Control Profiles Technical Data" section.
- "N2 Analog Output Objects" in the "N2 Protocol Technical Data" section.
- The slope of points 60 and 61 in the "FLN Protocol Technical Data" section.

Miscellaneous Drive Control

Using the fieldbus for miscellaneous drive control requires:

- Drive parameter values set as defined below.
- Fieldbus controller supplied reference word(s) in the appropriate location. (The location is defined by the Protocol Reference, which is protocol dependent.)

Drive Parameter		Value	Setting	Protocol Reference				
				Modbus		N2	FLN	BACnet
				ABB DRV	DCU PROFILE			
1601	RUN ENABLE	7 (COMM)	Run enable by fieldbus.	40001 bit 3	40031 bit 6 (inverted)	BO4	35	BV12
1604	FAULT RESET SEL	8 (COMM)	Fault reset by fieldbus.	40001 bit 7	40031 bit 4	BO6	94	BV14
1606	LOCAL LOCK	8 (COMM)	Source for local lock selection is the fieldbus.	Does not apply	40031 bit 14			
1607	PARAM SAVE	1 (SAVE)	Saves altered parameters to memory (then value returns to 0).	41607	40032 bit 2	BO18	N/A[1]	
1608	START ENABLE 1	7 (COMM)	Source for start enable 1 is the fieldbus Command word.	Does not apply.	40032 bit 2			BV20
1609	START ENABLE 2	7 (COMM)	Source for start enable 2 is the fieldbus Command word.		40032 bit 3			BV21
2013	MIN TORQUE SEL	7 (COMM)	Source for minimum torque selection is the fieldbus.		40031 bit 15			
2014	MAX TORQUE SEL	7 (COMM)	Source for maximum torque selection is the fieldbus.					
2201	ACC/DEC 1/2 SEL	7 (COMM)	Source for ramp pair selection is the fieldbus.		40031 bit 10			

1. Use Memorize Point command.

Relay Output Control

Using the fieldbus for relay output control requires:

- Drive parameter values set as defined below.
- Fieldbus controller supplied reference word(s) in the appropriate location. (The location is defined by the Protocol Reference, which is protocol dependent.)

Drive Parameter		Value	Setting	Protocol Reference				
				Modbus		N2	FLN	BACnet
				ABB DRV	DCU PROFILE			
1401	RELAY OUTPUT 1	35 (COMM)	Relay Output 1 controlled by fieldbus.	40134 bit 0 or 00033		BO7	40	BO0
1402	RELAY OUTPUT 2	35 (COMM)	Relay Output 2 controlled by fieldbus.	40134 bit 1 or 00034		BO8	41	BO1
1403	RELAY OUTPUT 3	35 (COMM)	Relay Output 3 controlled by fieldbus.	40134 bit 2 or 00035		BO9	42	BO2
1410[1]	RELAY OUTPUT 4	35 (COMM)	Relay Output 4 controlled by fieldbus.	40134 bit 3 or 00036		BO10	43	BO3
1411[1]	RELAY OUTPUT 5	35 (COMM)	Relay Output 5 controlled by fieldbus.	40134 bit 4 or 00037		BO11	44	BO4
1412[1]	RELAY OUTPUT 6	35 (COMM)	Relay Output 6 controlled by fieldbus.	40134 bit 5 or 00038		BO12	45	BO5

1. More than 3 relays requires the addition of a relay extension module.

For example: To control relays 1 and 2 using serial communication:
Set parameters 1401 RELAY OUTPUT 1 and 1402 RELAY OUTPUT 1 = 35 (COMM).

Then, for example using N2:

- To turn Relay 1 On: Force object B07 to On.
- To turn Relay 2 On: Force object B08 to On.
- To turn both Relay 1 and 2 On: Force objects B07 and B08 On.

Note! Relay status feedback occurs without configuration as defined below.

Drive Parameter		Value	Setting	Protocol Reference				
				Modbus		N2	FLN	BACnet
				ABB DRV	DCU PROFILE			
0122	RO 1-3 STATUS	Relay 1…3 status.	40122	0122		BI4…BI6	76…78	BI0…BI2
0123	RO 4-6 STATUS	Relay 4…6 status.	40123	0123		BI7…BI9	79…81	BI3…BI5

Analog Output Control

Using the fieldbus for analog output control requires:

- Drive parameter values set as defined below.
- Fieldbus controller supplied reference word(s) in the appropriate location. (The location is defined by the Protocol Reference, which is protocol dependent.)

Drive Parameter		Value	Setting	Protocol Reference				
				Modbus		N2	FLN	BACnet
				ABB DRV	DCU PROFILE			
1501	AO1 CONTENT SEL	135 (COMM VALUE 1)	Analog Output 1 controlled by writing to parameter 0135.	–		–	–	–
0135	COMM VALUE 1	–		40135		AO14	46	AO0
1507	AO2 CONTENT SEL	136 (COMM VALUE 2)	Analog Output 2 controlled by writing to parameter 0136.	–		–	–	–
0136	COMM VALUE 2	–		40136		AO15	47	AO1

PID Control Setpoint Source

Use the following settings to select the fieldbus as the setpoint source for PID loops:

Drive Parameter		Value	Setting	Protocol Reference				
				Modbus		N2	FLN	BACnet
				ABB DRV	DCU PROFILE			
4010	SET POINT SEL (Set 1)	8 (COMM VALUE 1) 9 (COMM + AI1) 10 (COMM*AI1)	Setpoint is either: • Input Reference 2 (+/-/* AI1). Control requires parameter 1106 value = comm. • Process PID setpoint. Control requires parameter 1106 value = pid1 out and parameter 4010 value = comm.	40003		AO2	61	AV17
4110	SET POINT SEL (Set 2)							
4210	SET POINT SEL (Ext/ Trim)							

Communication Fault

When using fieldbus control, specify the drive's action if serial communication is lost.

Drive Parameter		Value	Description
3018	COMM FAULT FUNC	0 (NOT SEL) 1 (FAULT) 2 (CONST SP7) 3 (LAST SPEED)	Set for appropriate drive response.
3019	COMM FAULT TIME	Set time delay before acting on a communication loss.	

Feedback from the Drive – EFB

Pre-defined Feedback

Inputs to the controller (drive outputs) have pre-defined meanings established by the protocol. This feedback does not require drive configuration. The following table lists a sample of feedback data. For a complete listing, see input word/point/object listings in the technical data for the appropriate protocol starting on page 166.

Drive Parameter		Protocol Reference			
		Modbus	N2	FLN	BACnet
0102	SPEED	40102	AI3	5	AV0
0103	FREQ OUTPUT	40103	AI1	2	AV1
0104	CURRENT	40104	AI4	6	AV4
0105	TORQUE	40105	AI5	7	AV5
0106	POWER	40106	AI6	8	AV6
0107	DC BUS VOLT	40107	AI11	13	AV2
0109	OUTPUT VOLTAGE	40109	AI12	14	AV3
0115	KWH COUNTER	40115	AI8	10	AV8
0118	DI1-3 STATUS – bit 1 (DI3)	40118	BI12	72	BI6, BI7, BI8
0122	RO1-3 STATUS	40122	BI4, BI5, BI6	76, 77, 78	BI0, BI1, BI2
0301	FB STATUS WORD – bit 0 (STOP)	40301 bit 0	BI1	23	BV0
0301	FB STATUS WORD – bit 2 (REV)	40301 bit 2	BI2	21	BV1

Note! With Modbus, any parameter can be accessed using the format: 4 followed by the parameter number.

Mailbox Read/Write

The ACH550 provides a "Mailbox" function to access parameters that have not been pre-defined by the protocol. Using mailbox, any drive parameter can be identified and read. Mailbox can also be used to adjust parameter settings by writing a value to any parameter identified. The following table describes the use of this function.

Name	Description	Protocol Reference			
		Modbus[1]	N2	FLN	BACnet
Mailbox Parameter	Enter the number of the drive parameter to access.	Does not apply.	AO19	95	AV25
Mailbox Data	Contains the parameter value after a read, or enter the desired parameter value for a write.		AO20	96	AV26
Mailbox Read	A binary value triggers a read – the value of the "Mailbox Parameter" appears in "Mailbox data".		BO19	97	BV15
Mailbox Write	A binary value triggers a write – the drive value for the "Mailbox Parameter" changes to the value in "Mailbox data".		BO20	98	BV16

1. As noted above, Modbus provides direct access to all parameters using the format: 4 followed by the parameter number.

Actual Value Scaling

The scaling of actual values can be protocol dependent. In general, for Actual Values, scale the feedback integer using the parameter's resolution. (See "Parameter Descriptions" section for parameter resolutions.) For example:

Feedback Integer	Parameter Resolution	(Feedback Integer) * (Parameter Resolution) = Scaled Value
1	0.1 mA	1 * 0.1 mA = 0.1 mA
10	0.1%	10 * 0.1% = 1%

Where parameters are in percent, the "Parameter Descriptions" section specifies what parameter corresponds to 100%. In such cases, to convert from percent to engineering units, multiply by the value of the parameter that defines 100% and divide by 100%. For example:

Feedback Integer	Parameter Resolution	Value of the Parameter that defines 100%	(Feedback Integer) * (Parameter Resolution) * (Value of 100% Ref.) / 100% = Scaled Value
10	0.1%	1500 rpm[1]	10 * 0.1% * 1500 RPM / 100% = 15 rpm
100	0.1%	500 Hz[2]	100 * 0.1% * 500 Hz / 100% = 50 Hz

1. Assuming, for the sake of this example, that the Actual Value uses parameter 9908 MOT NOM SPEED as the 100% reference, and that 9908 = 1500 rpm.
2. Assuming, for the sake of this example, that the Actual Value uses parameter 9907 MOT NOM FREQ as the 100% reference, and that 9907 = 500 Hz.

Although Actual Value scaling could differ from the above for the N2 and FLN protocols, it currently does not. To confirm, see the following sections, as appropriate:

- "N2 Analog Input Objects" in the "N2 Protocol Technical Data" section.
- "Scaling Drive Feedback Values" in the "FLN Protocol Technical Data" section.

Scaling does not apply for the BACnet protocol.

Diagnostics – EFB

Fault Queue for Drive Diagnostics

For general ACH550 diagnostics information, see "Diagnostics" starting on page 239. The three most recent ACH550 faults are reported to the fieldbus as defined below.

Drive Parameter		Protocol Reference			
		Modbus	N2	FLN	BACnet[1]
0401	Last Fault	40401	17	90	AV18
0412	Previous Fault 1	40402	18	91	AV19
0413	Previous Fault 2	40403	19	92	AV20

Serial Communication Diagnostics

Network problems can be caused by multiple sources. Some of these sources are:

- Loose connections
- Incorrect wiring (including swapped wires)
- Bad grounding
- Duplicate station numbers
- Incorrect setup of drives or other devices on the network

The major diagnostic features for fault tracing on an EFB network include Group 53 EFB Protocol parameters 5306…5309. The "Parameter Descriptions" section describes these parameters in detail.

Diagnostic Situations

The sub-sections below describe various diagnostic situations – the problem symptoms and corrective actions.

Normal Operation

During normal network operation, 5306…5309 parameter values act as follows at each drive:

- 5306 EFB OK MESSAGES advances (advances for each message properly received and addressed to this drive).
- 5307 EFB CRC ERRORS does not advance at all (advances when an invalid message CRC is received).
- 5308 EFB UART ERRORS does not advance at all (advances when character format errors are detected, such as parity or framing errors).
- 5309 EFB status value varies depending on network traffic.

Loss of Communication

The ACH550 behavior, if communication is lost, was configured in "Communication Fault". The parameters are 3018 COMM FAULT FUNC and 3019 COMM FAULT TIME. The "Parameter Descriptions" section describes these parameters in detail.

No Master Station on Line

If no master station is on line: Neither the EFB OK MESSAGES nor the errors (5307 EFB CRC ERRORS and 5308 EFB UART ERRORS) increase on any of the stations.

To correct:

- Check that a network master is connected and properly programmed on the network.
- Verify that the cable is connected, and is not cut or short circuited.

Duplicate Stations

If two or more stations have duplicate numbers:

- Two or more drives cannot be addressed.
- Every time there is a read or write to one particular station, the value for 5307 EFB CRC ERRORS or 5308 EFB UART ERRORS advances.

To correct: Check all station numbers and edit conflicting values.

Swapped Wires

If the communication wires are swapped (terminal A on one drive is connected to terminal B on another):

- The value of 5306 EFB OK MESSAGES does not advance.
- The values of 5307 EFB CRC ERRORS and 5308 EFB UART ERRORS are advancing.

To correct: Check that the RS-485 lines are not swapped.

Fault 28 – Serial 1 Err

If the drive's control panel shows fault code 28 "SERIAL 1 ERR", check for either of the following:

- The master system is down. To correct, resolve problem with master system.
- The communication connection is bad. To correct, check communication connection at the drive.
- The time-out selection for the drive is too short for the given installation. The master is not polling the drive within the specified time-out delay. To correct, increase the time set by parameter 3019 COMM FAULT TIME.

Faults 31…33 – EFB1…EFB3

The three EFB fault codes listed for the drive in "Diagnostics" starting on page 239 (fault codes 31…33) are not used.

Intermittent Off-line Occurrences

The problems described above are the most common problems encountered with ACH550 serial communication. Intermittent problems might also be caused by:

- Marginally loose connections,
- Wear on wires caused by equipment vibrations,
- Insufficient grounding and shielding on both the devices and on the communication cables.

Modbus Protocol Technical Data

Overview

The Modbus® protocol was introduced by Modicon, Inc. for use in control environments featuring Modicon programmable controllers. Due to its ease of use and implementation, this common PLC language was quickly adopted as a de-facto standard for integration of a wide variety of master controllers and slave devices.

Modbus is a serial, asynchronous protocol. Transactions are half-duplex, featuring a single Master controlling one or more Slaves. While RS232 can be used for point-to-point communication between a single Master and a single Slave, a more common implementation features a multi-drop RS485 network with a single Master controlling multiple Slaves. The ACH550 features RS485 for its Modbus physical interface.

RTU

The Modbus specification defines two distinct transmission modes: ASCII and RTU. The ACH550 supports RTU only.

Feature Summary

The following Modbus function codes are supported by the ACH550.

Function	Code (Hex)	Description
Read Coil Status	0x01	Read discrete output status. For the ACH550, the individual bits of the control word are mapped to Coils 1…16. Relay outputs are mapped sequentially beginning with Coil 33 (e.g. RO1=Coil 33).
Read Discrete Input Status	0x02	Read discrete inputs status. For the ACH550, the individual bits of the status word are mapped to Inputs 1…16 or 1…32, depending on the active profile. Terminal inputs are mapped sequentially beginning with Input 33 (e.g. DI1=Input 33).
Read Multiple Holding Registers	0x03	Read multiple holding registers. For the ACH550, the entire parameter set is mapped as holding registers, as well as command, status and reference values.
Read Multiple Input Registers	0x04	Read multiple input registers. For the ACH550, the 2 analog input channels are mapped as input registers 1 & 2.
Force Single Coil	0x05	Write a single discrete output. For the ACH550, the individual bits of the control word are mapped to Coils 1…16. Relay outputs are mapped sequentially beginning with Coil 33 (e.g. RO1=Coil 33).
Write Single Holding Register	0x06	Write single holding register. For the ACH550, the entire parameter set is mapped as holding registers, as well as command, status and reference values.
Diagnostics	0x08	Perform Modbus diagnostics. Subcodes for Query (0x00), Restart (0x01) & Listen Only (0x04) are supported.
Force Multiple Coils	0x0F	Write multiple discrete outputs. For the ACH550, the individual bits of the control word are mapped to Coils 1…16. Relay outputs are mapped sequentially beginning with Coil 33 (e.g. RO1=Coil 33).
Write Multiple Holding Registers	0x10	Write multiple holding registers. For the ACH550, the entire parameter set is mapped as holding registers, as well as command, status and reference values.
Read/Write Multiple Holding Registers	0x17	This function combines functions 0x03 and 0x10 into a single command.

Mapping Summary

The following table summarizes the mapping between the ACH550 (parameters and I/0) and Modbus reference space. For details, see "Modbus Addressing" below.

ACH550	Modbus Reference	Supported Function Codes
• Control Bits • Relay Outputs	Coils(0xxxx)	• 01 – Read Coil Status • 05 – Force Single Coil • 15 – Force Multiple Coils
• Status Bits • Discrete Inputs	Discrete Inputs(1xxxx)	• 02 – Read Input Status
• Analog Inputs	Input Registers(3xxxxx)	• 04 – Read Input Registers
• Parameters • Control/Status Words • References	Holding Registers(4xxxx)	• 03 – Read 4X Registers • 06 – Preset Single 4X Register • 16 – Preset Multiple 4X Registers • 23 – Read/Write 4X Registers

Communication Profiles

When communicating by Modbus, the ACH550 supports multiple profiles for control and status information. Parameter 5305 (EFB CTRL PROFILE) selects the profile used.

- ABB DRV LIM – The primary (and default) profile is the ABB DRV LIM profile, which standardizes the control interface with ACH400 drives. This profile is based on the PROFIBUS interface, and is discussed in detail in the following sections.
- DCU PROFILE – Another profile is called the DCU PROFILE profile. It extends the control and status interface to 32 bits, and is the internal interface between the main drive application and the embedded fieldbus environment.
- ABB DRV FULL – This profile standardizes the control interface with ACH600 and ACS800 drives. This profile is also based on the PROFIBUS interface, and supports two control word bits not supported by the ABB DRV LIM profile.

Modbus Addressing

With Modbus, each function code implies access to a specific Modbus reference set. Thus, the leading digit is not included in the address field of a Modbus message.

Note: The ACH550 supports the zero-based addressing of the Modbus specification. Holding register 40002 is addressed as 0001 in a Modbus message. Similarly, coil 33 is addressed as 0032 in a Modbus message.

Refer again to the "Mapping Summary" above. The following sections describe, in detail, the mapping to each Modbus reference set.

0xxxx Mapping – Modbus Coils. The drive maps the following information to the 0xxxx Modbus set called Modbus Coils:

- Bit-wise map of the CONTROL WORD (selected using parameter 5305 EFB CTRL PROFILE). The first 32 coils are reserved for this purpose.
- Relay output states, numbered sequentially beginning with coil 00033.

The following table summarizes the 0xxxx reference set:

Modbus Ref.	Internal Location (All Profiles)	ABB DRV LIM (5305 = 0)	DCU PROFILE (5305 = 1)	ABB DRV FULL (5305 = 2)
00001	CONTROL WORD – Bit 0	OFF1*	STOP	OFF1*
00002	CONTROL WORD – Bit 1	OFF2*	START	OFF2*
00003	CONTROL WORD – Bit 2	OFF3*	REVERSE	OFF3*
00004	CONTROL WORD – Bit 3	START	LOCAL	START
00005	CONTROL WORD – Bit 4	N/A	RESET	RAMP_OUT_ZERO*
00006	CONTROL WORD – Bit 5	RAMP_HOLD*	EXT2	RAMP_HOLD*
00007	CONTROL WORD – Bit 6	RAMP_IN_ZERO*	RUN_DISABLE	RAMP_IN_ZERO*
00008	CONTROL WORD – Bit 7	RESET	STPMODE_R	RESET
00009	CONTROL WORD – Bit 8	N/A	STPMODE_EM	N/A
00010	CONTROL WORD – Bit 9	N/A	STPMODE_C	N/A
00011	CONTROL WORD – Bit 10	N/A	RAMP_2	REMOTE_CMD*
00012	CONTROL WORD – Bit 11	EXT2	RAMP_OUT_0	EXT2
00013	CONTROL WORD – Bit 12	N/A	RAMP_HOLD	N/A
00014	CONTROL WORD – Bit 13	N/A	RAMP_IN_0	N/A
00015	CONTROL WORD – Bit 14	N/A	REQ_LOCALLOCK	N/A
00016	CONTROL WORD – Bit 15	N/A	TORQLIM2	N/A
00017	CONTROL WORD – Bit 16	Does not apply	FBLOCAL_CTL	Does not apply
00018	CONTROL WORD – Bit 17		FBLOCAL_REF	
00019	CONTROL WORD – Bit 18		START_DISABLE1	
00020	CONTROL WORD – Bit 19		START_DISABLE2	
00021… 00032	Reserved	Reserved	Reserved	Reserved
00033	RELAY OUTPUT 1	Relay Output 1	Relay Output 1	Relay Output 1
00034	RELAY OUTPUT 2	Relay Output 2	Relay Output 2	Relay Output 2
00035	RELAY OUTPUT 3	Relay Output 3	Relay Output 3	Relay Output 3
00036	RELAY OUTPUT 4	Relay Output 4	Relay Output 4	Relay Output 4
00037	RELAY OUTPUT 5	Relay Output 5	Relay Output 5	Relay Output 5
00038	RELAY OUTPUT 6	Relay Output 6	Relay Output 6	Relay Output 6

* = Active low

For the 0xxxx registers:

- Status is always readable.
- Forcing is allowed by user configuration of the drive for fieldbus control.
- Additional relay outputs are added sequentially.

The ACH550 supports the following Modbus function codes for coils:

Function Code	Description
01	Read coil status
05	Force single coil
15 (0x0F Hex)	Force multiple coils

1xxxx Mapping – Modbus Discrete Inputs. The drive maps the following information to the 1xxxx Modbus set called Modbus Discrete Inputs:

- Bit-wise map of the STATUS WORD (selected using parameter 5305 EFB CTRL PROFILE). The first 32 inputs are reserved for this purpose.
- Discrete hardware inputs, numbered sequentially beginning with input 33.

The following table summarizes the 1xxxx reference set:

Modbus Ref.	Internal Location (All Profiles)	ABB DRV (5305 = 0 or 2)	DCU PROFILE (5305 = 1)
10001	STATUS WORD – Bit 0	RDY_ON	READY
10002	STATUS WORD – Bit 1	RDY_RUN	ENABLED
10003	STATUS WORD – Bit 2	RDY_REF	STARTED
10004	STATUS WORD – Bit 3	TRIPPED	RUNNING
10005	STATUS WORD – Bit 4	OFF_2_STA*	ZERO_SPEED
10006	STATUS WORD – Bit 5	OFF_3_STA*	ACCELERATE
10007	STATUS WORD – Bit 6	SWC_ON_INHIB	DECELERATE
10008	STATUS WORD – Bit 7	ALARM	AT_SETPOINT
10009	STATUS WORD – Bit 8	AT_SETPOINT	LIMIT
10010	STATUS WORD – Bit 9	REMOTE	SUPERVISION
10011	STATUS WORD – Bit 10	ABOVE_LIMIT	REV_REF
10012	STATUS WORD – Bit 11	EXT2	REV_ACT
10013	STATUS WORD – Bit 12	RUN_ENABLE	PANEL_LOCAL
10014	STATUS WORD – Bit 13	N/A	FIELDBUS_LOCAL
10015	STATUS WORD – Bit 14	N/A	EXT2_ACT
10016	STATUS WORD – Bit 15	N/A	FAULT
10017	STATUS WORD – Bit 16	Reserved	ALARM
10018	STATUS WORD – Bit 17	Reserved	REQ_MAINT
10019	STATUS WORD – Bit 18	Reserved	DIRLOCK
10020	STATUS WORD – Bit 19	Reserved	LOCALLOCK
10021	STATUS WORD – Bit 20	Reserved	CTL_MODE
10022	STATUS WORD – Bit 21	Reserved	Reserved
10023	STATUS WORD – Bit 22	Reserved	Reserved
10024	STATUS WORD – Bit 23	Reserved	Reserved
10025	STATUS WORD – Bit 24	Reserved	Reserved
10026	STATUS WORD – Bit 25	Reserved	Reserved
10027	STATUS WORD – Bit 26	Reserved	REQ_CTL

Modbus Ref.	Internal Location (All Profiles)	ABB DRV (5305 = 0 or 2)	DCU PROFILE (5305 = 1)
10028	STATUS WORD – Bit 27	Reserved	REQ_REF1
10029	STATUS WORD – Bit 28	Reserved	REQ_REF2
10030	STATUS WORD – Bit 29	Reserved	REQ_REF2EXT
10031	STATUS WORD – Bit 30	Reserved	ACK_STARTINH
10032	STATUS WORD – Bit 31	Reserved	ACK_OFF_ILCK
10033	DI1	DI1	DI1
10034	DI2	DI2	DI2
10035	DI3	DI3	DI3
10036	DI4	DI4	DI4
10037	DI5	DI5	DI5
10038	DI6	DI6	DI6

* = Active low

For the 1xxxx registers:

- Additional discrete inputs are added sequentially.

The ACH550 supports the following Modbus function codes for discrete inputs:

Function Code	Description
02	Read input status

3xxxx Mapping – Modbus Inputs. The drive maps the following information to the 3xxxx Modbus addresses called Modbus input registers:

- Any user defined analog inputs.

The following table summarizes the input registers:

Modbus Reference	Internal Location (All Profiles)	Remarks
30001	AI1	This register shall report the level of Analog Input 1 (0…100%).
30002	AI2	This register shall report the level of Analog Input 2 (0…100%).

The ACH550 supports the following Modbus function codes for 3xxxx registers:

Function Code	Description
04	Read 3xxxx input status

4xxxx Register Mapping. The drive maps its parameters and other data to the 4xxxx holding registers as follows:

- 40001…40099 map to drive control and actual values. These registers are described in the table below.
- 40101…49999 map to drive parameters 0101…9999. Register addresses that do not correspond to drive parameters are invalid. If there is an attempt to read or write outside the parameter addresses, the Modbus interface returns an exception code to the controller.

The following table summarizes the 4xxxx drive control registers 40001…40099 (for 4xxxx registers above 40099, see the drive parameter list, e.g. 40102 is parameter 0102):

Modbus Register		Access	Remarks
40001	CONTROL WORD	R/W	Maps directly to the profile'S CONTROL WORD. Supported only if 5305 = 0 or 2 (ABB Drives profile). Parameter 5319 holds a copy in hex format.
40002	Reference 1	R/W	Range = 0…+20000 (scaled to 0…1105 REF1 MAX), or -20000…0 (scaled to 1105 REF1 MAX…0).
40003	Reference 2	R/W	Range = 0…+10000 (scaled to 0…1108 REF2 MAX), or -10000…0 (scaled to 1108 REF2 MAX…0).
40004	STATUS WORD	R	Maps directly to the profile'S STATUS WORD. Supported only if 5305 = 0 or 2 (ABB Drives profile). Parameter 5320 holds a copy in hex format.
40005	Actual 1 (select using 5310)	R	By default, stores a copy of 0103 OUTPUT FREQ. Use parameter 5310 to select a different actual value for this register.
40006	Actual 2 (select using 5311)	R	By default, stores a copy of 0104 CURRENT. Use parameter 5311 to select a different actual value for this register.
40007	Actual 3 (select using 5312)	R	By default, stores nothing. Use parameter 5312 to select an actual value for this register.
40008	Actual 4 (select by 5313)	R	By default, stores nothing. Use parameter 5313 to select an actual value for this register.
40009	Actual 5 (select using 5314)	R	By default, stores nothing. Use parameter 5314 to select an actual value for this register.
40010	Actual 6 (select using 5315)	R	By default, stores nothing. Use parameter 5315 to select an actual value for this register.
40011	Actual 7 (select using 5316)	R	By default, stores nothing. Use parameter 5316 to select an actual value for this register.
40012	Actual 8 (select using 5317)	R	By default, stores nothing. Use parameter 5317 to select an actual value for this register.
40031	ACH550 CONTROL WORD LSW	R/W	Maps directly to the Least Significant Word of the DCU profile's CONTROL WORD. Supported only if 5305 = 1. See parameter 0301.
40032	ACH550 CONTROL WORD MSW	R	Maps directly to the Most Significant Word of the DCU profile's CONTROL WORD. Supported only if 5305 = 1. See parameter 0302.
40033	ACH550 STATUS WORD LSW	R	Maps directly to the Least Significant Word of the DCU profile's CONTROL WORD. Supported only if 5305 = 1. See parameter 0303.
40034	ACH550 STATUS WORD MSW	R	Maps directly to the Most Significant Word of the DCU profile's CONTROL WORD. Supported only if 5305 = 1. See parameter 0304.

For the Modbus protocol, drive parameters in group 53 report the parameter mapping to 4xxxx Registers.

Code	Description
5310	EFB PAR 10 Specifies the parameter mapped to Modbus register 40005.
5311	EFB PAR 11 Specifies the parameter mapped to Modbus register 40006.
5312	EFB PAR 12 Specifies the parameter mapped to Modbus register 40007.
5313	EFB PAR 13 Specifies the parameter mapped to Modbus register 40008.
5314	EFB PAR 14 Specifies the parameter mapped to Modbus register 40009.
5315	EFB PAR 15 Specifies the parameter mapped to Modbus register 40010.
5316	EFB PAR 16 Specifies the parameter mapped to Modbus register 40011.
5317	EFB PAR 17 Specifies the parameter mapped to Modbus register 40012.
5318	Reserved.
5319	EFB PAR 19 Holds a copy (in hex) of the CONTROL WORD, Modbus register 40001.
5320	EFB PAR 20 Holds a copy (in hex) of the STATUS WORD, Modbus register 40004.

Except where restricted by the drive, all parameters are available for both reading and writing. The parameter writes are verified for the correct value, and for a valid register addresses.

Note! Parameter writes through standard Modbus are always volatile i.e. modified values are not automatically stored to permanent memory. Use parameter 1607 PARAM. SAVE to save all altered values.

The ACH550 supports the following Modbus function codes for 4xxxx registers:

Function Code	Description
03	Read holding 4xxxx registers
06	Preset single 4xxxx register
16 (0x10 Hex)	Preset multiple 4xxxx registers
23 (0x17 Hex)	Read/write 4xxxx registers

Actual Values

The contents of the register addresses 40005…40012 are ACTUAL VALUES and are:

- Specified using parameters 5310…5317.
- Read-only values containing information on the operation of the drive.
- 16-bit words containing a sign bit and a 15-bit integer.
- When negative values, written as the two's complement of the corresponding positive value.
- Scaled as described earlier in "Actual Value Scaling".

Exception Codes

Exception codes are serial communication responses from the drive. The ACH550 supports the standard Modbus exception codes defined below.

Exception Code	Name	Meaning
01	ILLEGAL FUNCTION	Unsupported Command
02	ILLEGAL DATA ADDRESS	The data address received in the query is not allowable. It is not a defined parameter/group.
03	ILLEGAL DATA VALUE	A value contained in the query data field is not an allowable value for the ACH550, because it is one of the following: • Outside min. or max. limits. • Parameter is read-only. • Message is too long. • Parameter write not allowed when start is active. • Parameter write not allowed when factory macro is selected.

ABB Control Profiles Technical Data

Overview

ABB Drives Profile

The ABB Drives profile provides a standard profile that can be used on multiple protocols, including Modbus and the protocols available on the FBA module. Two implementations of the ABB Drives profile are available:

- ABB DRV FULL – This implementation standardizes the control interface with ACS600 and ACS800 drives.
- ABB DRV LIM – This implementation standardizes the control interface with ACS400 drives. This implementation does not support two control word bits supported by ABB DRV FULL.

Except as noted, the following "ABB Drives Profile" descriptions apply to both implementations.

DCU Profile

The DCU profile extends the control and status interface to 32 bits, and is the internal interface between the main drive application and the embedded fieldbus environment.

Control Word

The CONTROL WORD is the principal means for controlling the drive from a fieldbus system. The fieldbus master station sends the CONTROL WORD to the drive. The drive switches between states according to the bit-coded instructions in the CONTROL WORD. Using the CONTROL WORD (ABB Drives profile version) requires that:

- The drive is in remote (REM) control.
- The serial communication channel is defined as the source for controlling commands (set using parameters 1001 EXT1 COMMANDS, 1002 EXT2 COMMANDS and 1102 EXT1/EXT2 SEL).
- The serial communication channel used is configured to use an ABB control profile. For example, to use the control profile ABB DRV FULL, requires both parameter 9802 COMM PROT SEL = 1 (STD MODBUS), and parameter 5305 EFB CTRL PROFILE = 2 (ABB DRV FULL).

ABB Drives Profile

The following table and the state diagram later in this sub-section describe the CONTROL WORD content for the ABB Drives Profile.

ABB Drives Profile (EFB) CONTROL WORD				
Bit	**Name**	**Value**	**Commanded State**	**Comments**
0	OFF1 CONTROL	1	READY TO OPERATE	Enter READY TO OPERATE
		0	EMERGENCY OFF	Drive ramps to stop according to currently active deceleration ramp (2203 or 2205) Normal command sequence: • Enter OFF1 ACTIVE • Proceed to READY TO SWITCH ON, unless other interlocks (OFF2, OFF3) are active.
1	OFF2 CONTROL	1	OPERATING	Continue operation (OFF2 inactive)
		0	EMERGENCY OFF	Drive coasts to stop. Normal command sequence: • Enter OFF2 ACTIVE • Proceed to SWITCHON INHIBITED
2	OFF3 CONTROL	1	OPERATING	Continue operation (OFF3 inactive)
		0	EMERGENCY STOP	Drive stops within in time specified by parameter 2208. Normal command sequence: • Enter OFF3 ACTIVE • Proceed to SWITCH ON INHIBITED **WARNING! Be sure motor and driven equipment can be stopped using this mode.**
3	INHIBIT OPERATION	1	OPERATION ENABLED	Enter OPERATION ENABLED (Note the Run enable signal must be active. See 1601. If 1601 is set to COMM, this bit also actives the Run Enable signal.)
		0	OPERATION INHIBITED	Inhibit operation. Enter OPERATION INHIBITED
4	Unused (**ABB DRV LIM**)			
	RAMP_OUT_ ZERO (**ABB DRV FULL**)	1	NORMAL OPERATION	Enter RAMP FUNCTION GENERATOR: ACCELERATION ENABLED
		0	RFG OUT ZERO	Force ramp function generator output to Zero. Drive ramps to stop (current and DC voltage limits in force).
5	RAMP_HOLD	1	RFG OUT ENABLED	Enable ramp function. Enter RAMP FUNCTION GENERATOR: ACCELERATOR ENABLED
		0	RFG OUT HOLD	Halt ramping (Ramp Function Generator output held)
6	RAMP_IN_ ZERO	1	RFG INPUT ENABLED	Normal operation. Enter OPERATING
		0	RFG INPUT ZERO	Force Ramp Function Generator input to zero.

ABB Drives Profile (EFB) CONTROL WORD				
Bit	**Name**	**Value**	**Commanded State**	**Comments**
7	RESET	0=>1	RESET	Fault reset if an active fault exists (Enter SWITCH-ON INHIBITED). Effective if 1604 = COMM.
		0	OPERATING	Continue normal operation
8…9	Unused			
10	Unused (**ABB DRV LIM**)			
	REMOTE_CMD (**ABB DRV FULL**)	1		Fieldbus control enabled.
		0		• CW ≠ 0 or Ref ≠ 0: Retain last CW and Ref. • CW = 0 and Ref = 0: Fieldbus control enabled. • Ref and deceleration/acceleration ramp are locked.
11	EXT CTRL LOC	1	EXT2 SELECT	Select external control location 2 (EXT2). Effective if 1102 = COMM.
		0	EXT1 SELECT	Select external control location 1 (EXT1). Effective if 1102 = COMM.
12…15	Unused			

DCU Profile

The following tables describe the CONTROL WORD content for the DCU profile.

DCU Profile CONTROL WORD (See Parameter 0301)				
Bit	**Name**	**Value**	**Command/Req.**	**Comments**
0	STOP	1	Stop	Stops according to either the stop mode parameter or the stop mode requests (bits 7 and 8). Simultaneous STOP and START commands result in a stop command.
		0	(no op)	
1	START	1	Start	
		0	(no op)	
2	REVERSE	1	Reverse direction	This bit XOR'd with the sign of the reference defines direction.
		0	Forward direction	
3	LOCAL	1	Local mode	When the fieldbus sets this bit, it steals control and the drive moves to fieldbus local control mode.
		0	External mode	
4	RESET	-> 1	Reset	Edge sensitive.
		other	(no op)	
5	EXT2	1	Switch to EXT2	
		0	Switch to EXT1	
6	RUN_DISABLE	1	Run disable	Inverted run enable.
		0	Run enable on	
7	STPMODE_R	1	Normal ramp stop mode	
		0	(no op)	

DCU Profile CONTROL WORD (See Parameter 0301)				
Bit	**Name**	**Value**	**Command/Req.**	**Comments**
8	STPMODE_EM	1	Emergency ramp stop mode	
		0	(no op)	
9	STPMODE_C	1	Coast stop mode	
		0	(no op)	
10	RAMP_2	1	Ramp pair 2	
		0	Ramp pair 1	
11	RAMP_OUT_0	1	Ramp output to 0	
		0	(no op)	
12	RAMP_HOLD	1	Ramp freeze	
		0	(no op)	
13	RAMP_IN_0	1	Ramp input to 0	
		0	(no op)	
14	RREQ_LOCALLOC	1	Local mode lock	In lock, drive will not switch to local mode.
		0	(no op)	
15	TORQLIM2	1	Torque limit pair 2	
		0	Torque limit pair 1	

DCU Profile CONTROL WORD (See Parameter 0302)				
Bit	**Name**	**Value**	**Function**	**Comments**
16…26	Reserved			
27	REF_CONST	1	Constant speed ref.	These bits are only for supervision purposes.
		0	(no op)	
28	REF_AVE	1	Average speed ref.	
		0	(no op)	
29	LINK_ON	1	Master is detected in link	
		0	Link is down	
30	REQ_STARTINH	1	Start inhibit request is pending	
		0	Start inhibit request is OFF	
31	OFF_INTERLOCK	1	Panel OFF button pressed	For the control panel (or PC tool) this is the OFF button interlock.
		0	(no op)	

Status Word

The contents of the STATUS WORD is status information, sent by the drive to the master station.

ABB Drives Profile

The following table and the state diagram later in this sub-section describe the status word content for the ABB Drives Profile.

ABB Drives Profile (EFB) STATUS WORD			
Bit	**Name**	**Value**	**Description (Correspond to states/boxes in the state diagram)**
0	RDY_ON	1	READY TO SWITCH ON
		0	NOT READY TO SWITCH ON
1	RDY_RUN	1	READY TO OPERATE
		0	OFF1 ACTIVE
2	RDY_REF	1	OPERATION ENABLED
		0	OPERATION INHIBITED
3	TRIPPED	0…1	FAULT
		0	No fault
4	OFF_2_STA	1	OFF2 INACTIVE
		0	**OFF2 ACTIVE**
5	OFF_3_STA	1	OFF3 INACTIVE
		0	**OFF3 ACTIVE**
6	SWC_ON_INHIB	1	SWITCH-ON INHIBIT ACTIVE
		0	SWITCH-ON INHIBIT NOT ACTIVE
7	ALARM	1	Warning/alarm (See "Alarm Listing" in the "Diagnostics" section for details on alarms.)
		0	No warning/alarm
8	AT_SETPOINT	1	OPERATING**.** Actual value equals (within tolerance limits) the reference value.
		0	Actual value is outside tolerance limits (not equal to reference value).
9	REMOTE	1	Drive control location: REMOTE (EXT1 or EXT2)
		0	Drive control location: LOCAL
10	ABOVE_LIMIT	1	Supervised parameter's value ≥ supervision high limit. Bit remains "1" until supervised parameter's value < supervision low limit. See group 32, Supervision
		0	Supervised parameter's value < supervision low limit. Bit remains "0" until supervised parameter's value > supervision high limit. See group 32, Supervision
11	EXT CTRL LOC	1	External control location 2 (EXT2) selected
		0	External control location 1 (EXT1) selected
12	EXT RUN ENABLE	1	External Run Enable signal received
		0	No External Run Enable signal received
13… 15	Unused		

DCU Profile

The following tables describe the STATUS WORD content for the DCU profile.

DCU Profile STATUS WORD (See Parameter 0303)			
Bit	**Name**	**Value**	**Status**
0	READY	1	Drive is ready to receive start command.
		0	Drive is not ready.
1	ENABLED	1	External run enable signal received.
		0	No external run enable signal received.
2	STARTED	1	Drive has received start command.
		0	Drive has not received start command.
3	RUNNING	1	Drive is modulating.
		0	Drive is not modulating.
4	ZERO_SPEED	1	Drive is at zero speed.
		0	Drive has not reached zero speed.
5	ACCELERATE	1	Drive is accelerating.
		0	Drive is not accelerating.
6	DECELERATE	1	Drive is decelerating.
		0	Drive is not decelerating.
7	AT_SETPOINT	1	Drive is at setpoint.
		0	Drive has not reached setpoint.
8	LIMIT	1	Operation is limited by Group 20 settings.
		0	Operation is within Group 20 settings.
9	SUPERVISION	1	A supervised parameter (Group 32) is outside its limits.
		0	All supervised parameters are within limits.
10	REV_REF	1	Drive reference is in reverse direction.
		0	Drive reference is in forward direction.
11	REV_ACT	1	Drive is running in reverse direction.
		0	Drive is running in forward direction.
12	PANEL_LOCAL	1	Control is in control panel (or PC tool) local mode.
		0	Control is not in control panel local mode.
13	FIELDBUS_LOCAL	1	Control is in fieldbus local mode (steals control panel local).
		0	Control is not in fieldbus local mode.
14	EXT2_ACT	1	Control is in EXT2 mode.
		0	Control is in EXT1 mode.
15	FAULT	1	Drive is in a fault state.
		0	Drive is not in a fault state.

DCU Profile STATUS WORD (See Parameter 0304)			
Bit	**Name**	**Value**	**Status**
16	ALARM	1	An alarm is on.
		0	No alarms are on.
17	REQ_MAINT	1	A maintenance request is pending.
		0	No maintenance request is pending.
18	DIRLOCK	1	Direction lock is ON. (Direction change is locked out.)
		0	Direction lock is OFF.
19	LOCALLOCK	1	Local mode lock is ON. (Local mode is locked out.)
		0	Local mode lock is OFF.
20	CTL_MODE	1	Drive is in vector control mode.
		0	Drive is in scalar control mode.
21…25	Reserved		
26	REQ_CTL	1	Copy the control word
		0	(no op)
27	REQ_REF1	1	Reference 1 requested in this channel.
		0	Reference 1 is not requested in this channel.
28	REQ_REF2	1	Reference 2 requested in this channel.
		0	Reference 2 is not requested in this channel.
29	REQ_REF2EXT	1	External PID reference 2 requested in this channel.
		0	External PID reference 2 is not requested in this channel.
30	ACK_STARTINH	1	A start inhibit from this channel is granted.
		0	A start inhibit from this channel is not granted.
31	ACK_OFF_ILCK	1	Start inhibit due to OFF button
		0	Normal operation

State Diagram

ABB Drives Profile

To illustrate the operation of the state diagram, the following example (ABB DRV LIM implementation of the ABB Drives profile) uses the control word to start the drive:

- First, the requirements for using the CONTROL WORD must be met. See above.
- When the power is first connected, the state of the drive is not ready to switch on. See dotted lined path (▪▪▪) in the state diagram below.
- Use the CONTROL WORD to step through the state machine states until the OPERATING state is reached, meaning that the drive is running and follows the given reference. See table below.

Step	CONTROL WORD **Value**	**Description**
1	CW = 0000 0000 0000 0110 bit 15 bit 0	This CW value changes the drive state to READY TO SWITCH ON.
2		Wait at least 100 ms before proceeding.
3	CW = 0000 0000 0000 0111	This CW value changes the drive state to READY TO OPERATE.
4	CW = 0000 0000 0000 1111	This CW value changes the drive state to OPERATION ENABLED. The drive starts, but will not accelerate.
5	CW = 0000 0000 0010 1111	This CW value releases the ramp function generator (RFG) output, and changes the drive state to RFG: ACCELERATOR ENABLED.
6	CW = 0000 0000 0110 1111	This CW value releases the ramp function generator (RFG) output, and changes the drive state to OPERATING. The drive accelerates to the given reference and follows the reference.

The state diagram below describes the start-stop function of CONTROL WORD (CW) and STATUS WORD (SW) bits for the ABB Drives profile.

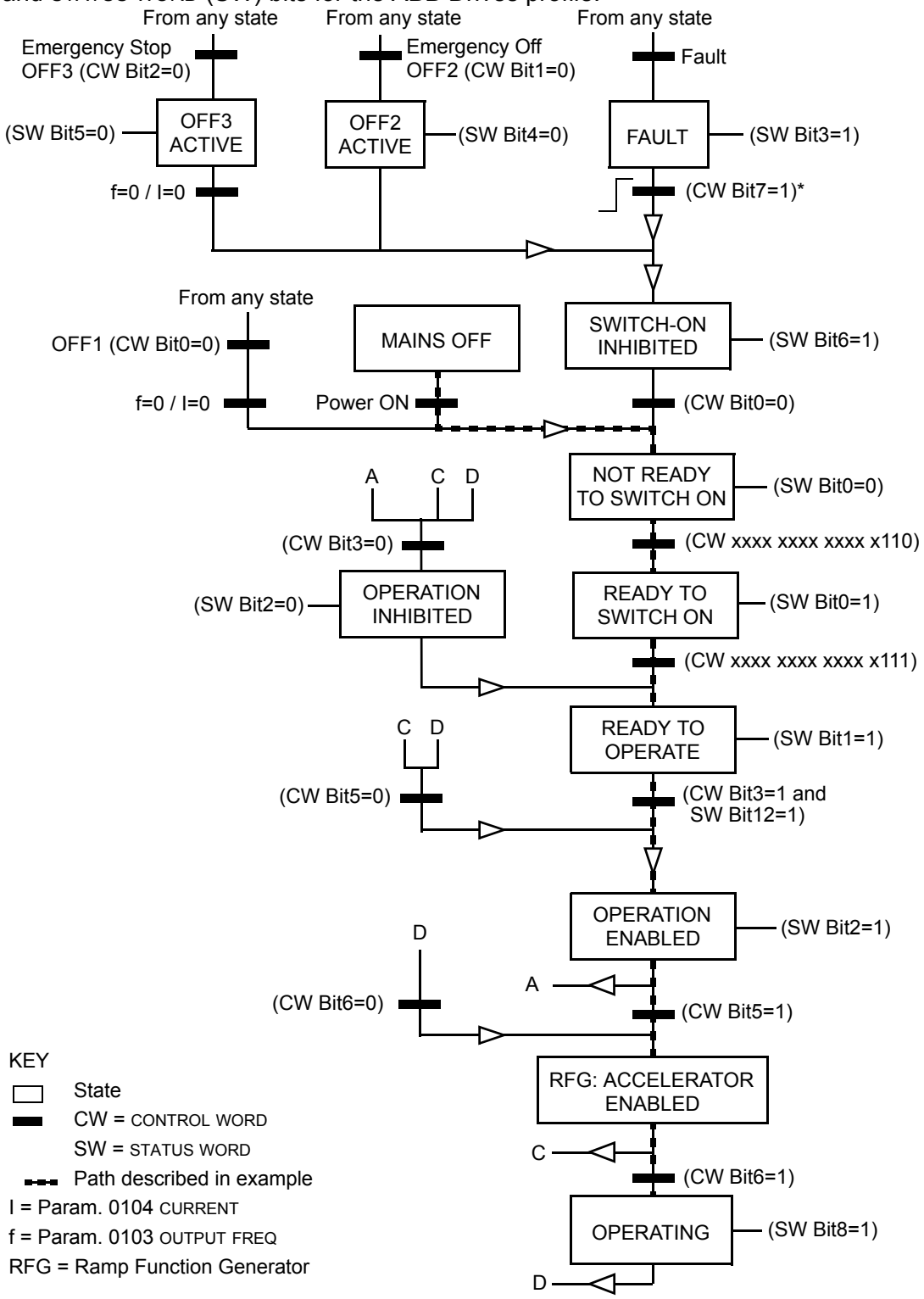

*This state transition also occurs if the fault is reset from any other source (e.g. digital input).

Reference Scaling

ABB Drives and DCU Profiles

The following table describes REFERENCE scaling for the ABB Drives profile.

ABB Drives and DCU Profiles				
Reference	**Range**	**Reference Type**	**Scaling**	**Remarks**
REF1	-32767 … +32767	Speed or frequency	-20000 = -**(par. 1105)** 0 = 0 +20000 = **(par. 1105)** (20000 corresponds to 100%)	Final reference limited by 1104/1105. Actual motor speed limited by 2001/2002 (speed) or 2007/2008 (frequency).
REF2	-32767 … +32767	Speed or frequency	-10000 = -**(par. 1108)** 0 = 0 +10000 = **(par. 1108)** (10000 corresponds to 100%)	Final reference limited by 1107/1108. Actual motor speed limited by 2001/2002 (speed) or 2007/2008 (frequency).
		Torque	-10000 = -**(par. 1108)** 0 = 0 +10000 = **(par. 1108)** (10000 corresponds to 100%)	Final reference limited by 2015/2017 (torque1) or 2016/2018 (torque2).
		PID Reference	-10000 = -**(par. 1108)** 0 = 0 +10000 = **(par. 1108)** (10000 corresponds to 100%)	Final reference limited by 4012/4013 (PID set1) or 4112/4113 (PID set2).

Note! The setting of parameter 1104 REF1 MIN and 1107 REF2 MIN has no effect on the scaling of references.

When parameter 1103 REF1 SELECT or 1106 REF2 SELECT is set to COMM+AI1 or COMM*AI1, the reference is scaled as follows:

ABB Drives and DCU Profiles		
Reference	**Value Setting**	**AI Reference Scaling**
REF1	COMM+AI1	COMM (%) +(AI (%) - 0.5*REF1 MAX (%)) 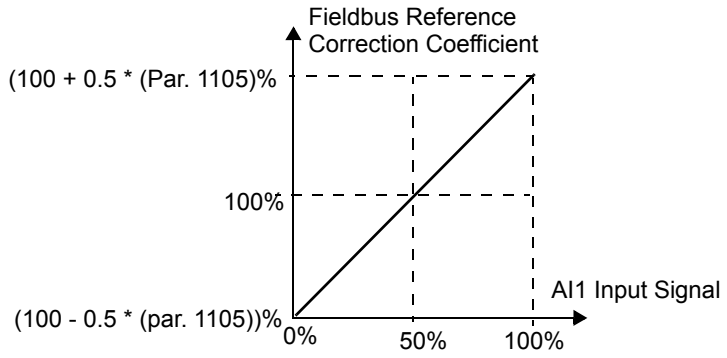

ABB Drives and DCU Profiles		
Reference	**Value Setting**	**AI Reference Scaling**
REF1	COMM*AI1	COMM (%) * (AI (%) / 0.5*REF1 MAX (%)) 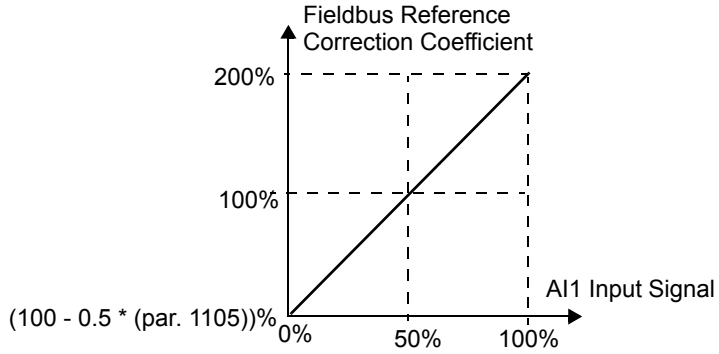
REF2	COMM+AI1	COMM (%) + (AI (%) - 0.5*REF2 MAX (%)) 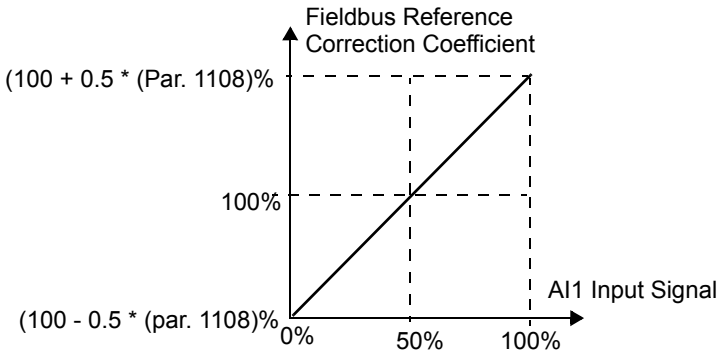
REF2	COMM*AI1	COMM (%) * (AI (%) / 0.5*REF2 MAX (%)) 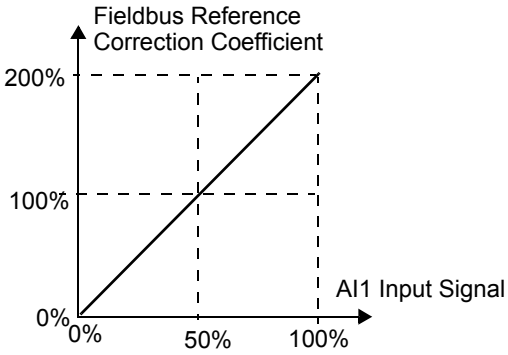

Reference Handling

Use group 10 parameters to configure for control of rotation direction for each control location (EXT1 and EXT2). The following diagrams illustrate how group 10 parameters and the sign of the fieldbus reference interact to produce REFERENCE values (REF1 and REF2). Note, fieldbus references are bipolar, that is they can be positive or negative.

ABB Drives Profile		
Parameter	**Value Setting**	**AI Reference Scaling**
1003 DIRECTION	1 (FORWARD)	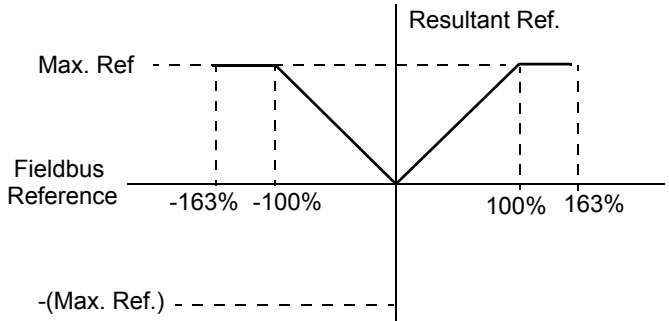
1003 DIRECTION	2 (REVERSE)	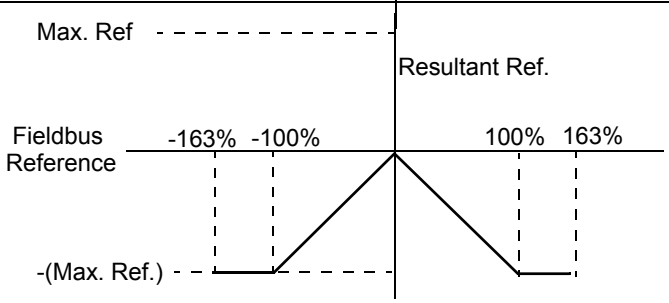
1003 DIRECTION	3 (REQUEST)	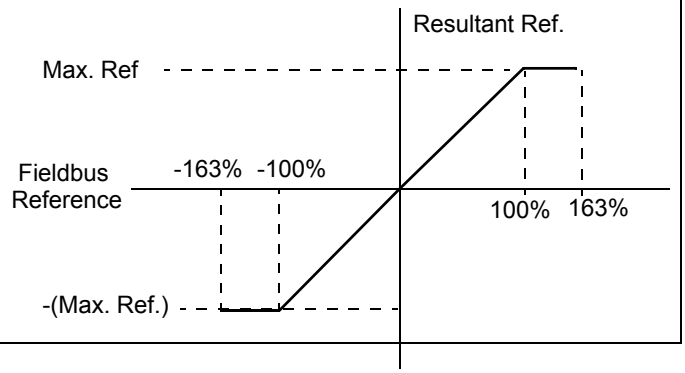

N2 Protocol Technical Data

Overview

The N2 Fieldbus connection to the ACH550 drives is based on an industry standard RS-485 physical interface. The N2 Fieldbus protocol is a master-slave type, serial communication protocol, used by the Johnson Controls Metasys® system. In the Metasys architecture the N2 Fieldbus connects object interfaces and remote controllers to Network Control Units (NCUs).

The N2 Fieldbus can also be used to connect ACH550 drives to the Metasys Companion product line.

This section describes the use of the N2 Fieldbus with the ACH550 drives' connection and does not describe the protocol in detail.

Supported Features

In the N2 Fieldbus protocol the ACH550 drive appears as a "virtual object".

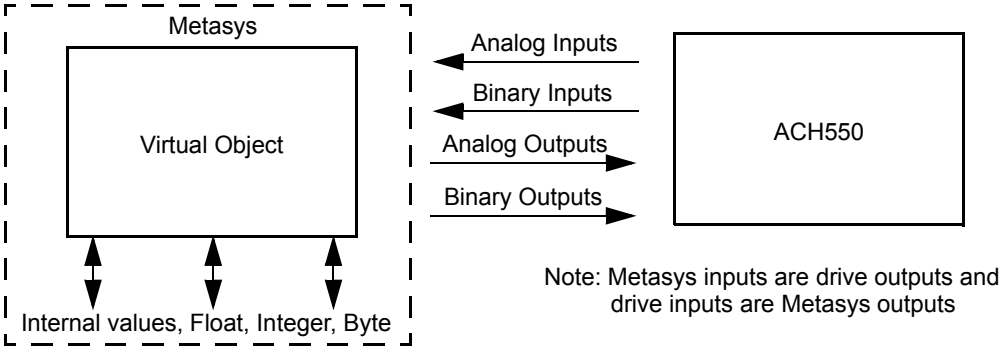

A virtual object is made up of:

- Analog Inputs
- Binary Inputs
- Analog Outputs
- Binary Outputs
- Internal values for Floating point, Integer, and Byte values.

The ACH550 drive does not support N2 Fieldbus communication "internal values".

All of the Analog and Binary I/O objects are listed below, starting with "N2 Analog Input Objects" on page 188.

Analog Input – The analog input objects support the following features:

- Analog Input actual value in engineering units
- Low Alarm limit
- Low Warning limit
- High Warning limit
- High Alarm limit
- Differential value for the hysteresis of the Alarms and Warnings

- Change of State (COS) enabled
- Alarm Enabled
- Warning Enabled
- Override value is received, but there is no action taken.

Binary Input – The binary input objects support the following features:

- Binary Input actual value
- Normal / Alarm state specification
- Alarm Enabled
- Change of State (COS) enabled
- Override value is received, but there is no action taken.

Analog Output – The analog output objects support the following features:

- Analog Output value in engineering units
- Override value is used to change the Analog Output value. It is not possible to return to the previous value by removing the override. The override feature is used only to change the value.

Binary Output – The binary output objects support the following features:

- Binary Output value
- Override value is used to change the Binary Output value. It is not possible to return to the previous value by removing the override. The override feature is used only to change the value.

Metasys Integration

The following diagram shows the drives' integration to the Johnson Controls Metasys system.

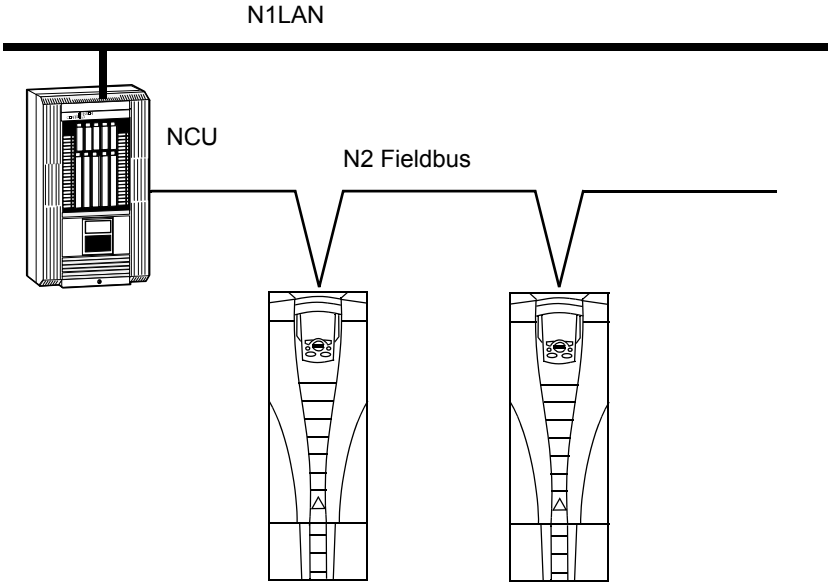

The following diagram shows the drives' integration to the Johnson Controls Metasys Companion system.

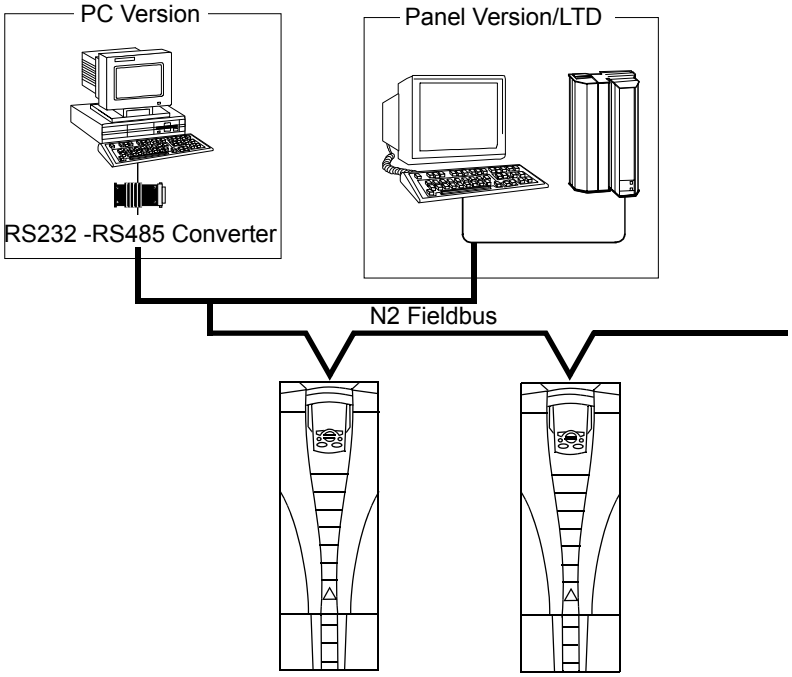

On the N2 Fieldbus each ACH550 drive can be accessed by the full complement of Metasys FMS features, including Change-of-State (COS) monitoring, alarm notification, scheduling, trend, and totalization.

On one N2 Fieldbus segment there can be up to 32 nodes while integrating ACH550 drives with Johnson Controls Metasys.

Drive Device Type

For the Metasys and Metasys Companion products, the device type for the ACH550 drive is VND.

N2 Analog Input Objects

The following table lists the N2 Analog Input objects defined for the ACH550 drive.

N2 Analog Inputs:					
Number	**Object**	**Drive Parameter**	**Scale Factor**	**Units**	**Range**
AI1	OUTPUT FREQUENCY	0103	10	Hz	0…250
AI2	RATED SPEED	Note 1	10	%	0 …100
AI3	SPEED	0102	1	rpm	0 …9999
AI4	CURRENT	0104	10	A	0…9999
AI5	TORQUE	0105	10	%	-200…200
AI6	POWER	0106	10	kW	0…9999
AI7	DRIVE TEMPERATURE	0110	10	°C	0 …125
AI8	KILOWATT HOURS	0115	1	kWh	0…9999

N2 Analog Inputs:					
Number	**Object**	**Drive Parameter**	**Scale Factor**	**Units**	**Range**
AI9	MEGAWATT HOURS	0141	1	MWh	0…999
AI10	RUN TIME	0114	1	H	0…9999
AI11	DC BUS VOLTAGE	0107	1	V	0…999
AI12	OUTPUT VOLTAGE	0109	1	V	0…999
AI13	PRC PID FEEDBACK	0130	10	%	0…100
AI14	PRC PID DEVIATION	0132	10	%	0…100
AI15	EXT PID FEEDBACK	0131	10	%	0…100
AI16	EXT PID DEVIATION	0133	10	%	0…100
AI17	LAST FAULT	0401	1		fault code
AI18	PREV FAULT	0402	1		fault code
AI19	OLDEST FAULT	0403	1		fault code
AI20	AI 1 ACTUAL	0120	10	%	0…100
AI21	AI 2 ACTUAL	0121	10	%	0…100
AI22	AO 1 ACTUAL	0124	10	mA	0…20
AI23	AO 2 ACTUAL	0125	10	mA	0…20
AI24	MOTOR TEMP	0145	1	°C	0…200
AI25	REVOLUTION CNT	0142	1	MREV	0…32767

1. RATED SPEED is a percent of maximum frequency (parameter 2008) if the drive is in scalar mode, and is a percent of maximum speed (parameter 2002) in speed mode.

N2 Binary Input Objects

The following table lists the N2 Binary Input objects defined for the ACH550 drive.

N2 Binary Inputs:			
Number	**Object**	**Drive Parameter**	**Range**
BI1	STOP/RUN	Status Word	0 = Stop, 1 = Drive Running
BI2	FORWARD/REVERSE	Status Word	0 = Forward, 1 = Reverse
BI3	FAULT STATUS	Status Word	0 = OK, 1 = Drive Fault
BI4	RELAY 1 STATUS	0122 (bit mask 04)	0 = Off, 1 = On
BI5	RELAY 2 STATUS	0122 (bit mask 02)	0 = Off, 1 = On
BI6	RELAY 3 STATUS	0122 (bit mask 01)	0 = Off, 1 = On
BI7	RELAY 4 STATUS	0123 (bit mask 04)	0 = Off, 1 = On
BI8	RELAY 5 STATUS	0123 (bit mask 02)	0 = Off, 1 = On
BI9	RELAY 6 STATUS	0123 (bit mask 01)	0 = Off, 1 = On
BI10	INPUT 1 STATUS	0118 (bit mask 04)	0 = Off, 1 = On
BI11	INPUT 2 STATUS	0118 (bit mask 02)	0 = Off, 1 = On
BI12	INPUT 3 STATUS	0118 (bit mask 01)	0 = Off, 1 = On
BI13	INPUT 4 STATUS	0119 (bit mask 04)	0 = Off, 1 = On
BI14	INPUT 5 STATUS	0119 (bit mask 02)	0 = Off, 1 = On

N2 Binary Inputs:			
Number	**Object**	**Drive Parameter**	**Range**
BI15	INPUT 6 STATUS	0119 (bit mask 01)	0 = Off, 1 = On
BI16	EXTERNAL 2 SELECT	Status Word	0 = EXT1 = EXT2
BI17	HAND/AUTO	Status Word	0 = AUTO, 1 = HAND
BI18	ALARM	Status Word	0 = OK, 1 = ALARM
BI19	MAINTENANCE REQ	Status Word	0 = OK, 1 = MAINT REQ
BI20	DRIVE READY	Status Word	0 = Not Ready, 1 = Ready
BI21	AT SETPOINT	Status Word	0 = No, 1 = At Setpoint
BI22	RUN ENABLED	Status Word	0 = Not Enabled, 1 = Enabled
BI23	N2 LOCAL MODE	Status Word	0 = Auto, 1 = N2 Local
BI24	N2 CONTROL SRC	Status Word	0 = No, 1 = Yes
BI25	N2 REF1 SRC	Status Word	0 = No, 1 = Yes
BI26	N2 REF2 SRC	Status Word	0 = No, 1 = Yes

N2 Analog Output Objects

The following table lists the N2 Analog Output objects defined for the ACH550 drive.

N2 Analog Outputs:					
Number	**Object**	**Drive Parameter**	**Scale Factor**	**Units**	**Range**
AO1	REFERENCE 1	Reference 1	10	%	0…100
AO2	REFERENCE 2	Reference 2	10	%	0…100
AO3	ACCEL TIME 1	2202	10	s	0.1…1800
AO4	DECEL TIME 1	2203	10	s	0.1…1800
AO5	CURRENT LIMIT	2003	10	A	0…1.3*I_{2N}
AO6	PID1-CONT GAIN	4001	10	%	0.1…100
AO7	PID1-CONT I-TIME	4002	10	s	0.1…600
AO8	PID1-CONT D-TIME	4003	10	s	0…10
AO9	PID1-CONT D FILTER	4004	10	s	0…10
AO10	PID2-CONT GAIN	4101	10	%	0.1…100
AO11	PID2-CONT I-TIME	4102	10	s	0.1…600
AO12	PID2-CONT D-TIME	4103	10	s	0…10
AO13	PID2-CONT D FILTER	4104	10	s	0…10
AO14	COMMAND AO 1	135	10	%	0…100
AO15	COMMAND AO 2	136	10	%	0…100
AO16	EXT PID SETPOINT	4211	10	%	0…100
AO17	SPD OUT MIN	2001/2007	10	%	0…200
AO18	SPD OUT MAX	2002/2008	10	%	0…200
A019	MAILBOX PARAMETER		1		0…65535
A020	MAILBOX DATA		1		0…65535

N2 Binary Output Objects

The following table lists the N2 Binary Output objects defined for the ACH550 drive.

N2 Binary Outputs:			
Number	**Object**	**Drive Parameter**	**Range**
BO1	STOP/START	Command Word	0 = Stop, 1 = Start to Speed
BO2	FORWARD/REVERSE	Command Word	0 = Forward, 1 = Reverse
BO3	PANEL LOCK	Command Word	0 = Open, 1 = Locked
BO4	RUN ENABLE	Command Word	0 = Enable, 1 = Disable
BO5	REF1/REF2 SELECT	Command Word	0 = Ref1, 1 = Ref2
BO6	FAULT RESET	Command Word	Change 0 -> 1 Resets
BO7	COMMAND RO 1	134 (bit mask 01)	0 = Off, 1 = On
BO8	COMMAND RO 2	134 (bit mask 02)	0 = Off, 1 = On
BO9	COMMAND RO 3	134 (bit mask 04)	0 = Off, 1 = On
BO10	COMMAND RO 4	134 (bit mask 08)	0 = Off, 1 = On
BO11	COMMAND RO 5	134 (bit mask 10)	0 = Off, 1 = On
BO12	COMMAND RO 6	134 (bit mask 20)	0 = Off, 1 = On
BO13	RESET RUN TIME	114 (indirectly)	0 = N/A, 1 = On (Reset Run Time)
BO14	RESET KWH COUNT	115 (indirectly)	0 = N/A, 1 = On (Reset kWh Count)
BO15	PRC PID SELECT	4027 (indirectly)	0 = SET2, 1 = SET2
BO16	N2 LOCAL CTL (Note 1)	Command Word	0 = Auto, 1 = N2
BO17	N2 LOCAL REF (Note 1)	Command Word	0 = Auto, 1 = N2
BO18	SAVE PARAMETERS	1607 (indirectly)	0 = N/A, 1 = On (Save Parameters)
B019	READ MAILBOX		0 = No, 1 = Yes
B020	WRITE MAILBOX		0 = No, 1 = Yes

1. N2 LOCAL CTL and N2 LOCAL REF have priority over drive input terminals. Use these binary outputs for temporary N2 control of the drive when COMM is not the selected control source.

DDL File for NCU

The listing below is the Data Definition Language (DDL) file for ACH550 drives used with the Network Control Units.

This listing is useful when defining drive I/O objects to the Network Controller Units.

Below is the ACH550.DDL file listing.

```
*******************************************************************
*  ABB Drives, ACH 550 Variable Frequency Drive
*******************************************************************
CSMODEL "ACH_550","VND"

AITITLE "Analog_Inputs"
BITITLE "Binary_Inputs"
AOTITLE "Analog_Outputs"
BOTITLE "Binary_Outputs"
```

```
CSAI "AI1",N,N,"FREQ_ACT","Hz"
CSAI "AI2",N,N,"PCT_ACT","%"
CSAI "AI3",N,N,"SPEED","RPM"
CSAI "AI4",N,N,"CURRENT","A"
CSAI "AI5",N,N,"TORQUE","%"
CSAI "AI6",N,N,"POWER","kW"
CSAI "AI7",N,N,"DRV_TEMP","°C"
CSAI "AI8",N,N,"ENERGY_k","kWh"
CSAI "AI9",N,N,"ENERGY_M","MWh"
CSAI "AI10",N,N,"RUN_TIME","H"
CSAI "AI11",N,N,"DC_VOLT","V"
CSAI "AI12",N,N,"VOLT_ACT","V"
CSAI "AI13",N,N,"PID1_ACT","%"
CSAI "AI14",N,N,"PID2_DEV","%"
CSAI "AI15",N,N,"PID2_ACT","%"
CSAI "AI16",N,N,"PID2_DEV","%"
CSAI "AI17",N,N,"LAST_FLT","Code"
CSAI "AI18",N,N,"PREV_FLT","Code"
CSAI "AI19",N,N,"1ST_FLT","Code"
CSAI "AI20",N,N,"AI_1_ACT","%"
CSAI "AI21",N,N,"AI_2_ACT","%"
CSAI "AI22",N,N,"AO_1_ACT","mA"
CSAI "AI23",N,N,"AO_2_ACT","mA"
CSAI "AI24",N,N,"MTR_TEMP","°C"
CSAI "AI25",N,N,"REVL_CNT",""

CSBI "BI1",N,N,"STOP/RUN","STOP","RUN"
CSBI "BI2",N,N,"FWD/REV","FWD","REV"
CSBI "BI3",N,N,"FAULT","OK","FLT"
CSBI "BI4",N,N,"RELAY_1","OFF","ON"
CSBI "BI5",N,N,"RELAY_2","OFF","ON"
CSBI "BI6",N,N,"RELAY_3","OFF","ON"
CSBI "BI7",N,N,"RELAY_4","OFF","ON"
CSBI "BI8",N,N,"RELAY_5","OFF","ON"
CSBI "BI9",N,N,"RELAY_6","OFF","ON"
CSBI "BI10",N,N,"INPUT_1","OFF","ON"
CSBI "BI11",N,N,"INPUT_2","OFF","ON"
CSBI "BI12",N,N,"INPUT_3","OFF","ON"
CSBI "BI13",N,N,"INPUT_4","OFF","ON"
CSBI "BI14",N,N,"INPUT_5","OFF","ON"
CSBI "BI15",N,N,"INPUT_6","OFF","ON"
CSBI "BI16",N,N,"EXT1/2","EXT1","EXT2"
CSBI "BI17",N,N,"HND/AUTO","HAND","AUTO"
CSBI "BI18",N,N,"ALARM","OFF","ON"
CSBI "BI19",N,N,"MNTNCE_R","OFF","ON"
CSBI "BI20",N,N,"DRV_REDY","NO","YES"
CSBI "BI21",N,N,"AT_SETPT","NO","YES"
CSBI "BI22",N,N,"RUN_ENAB","NO","YES"
CSBI "BI23",N,N,"N2_LOC_M","AUTO","N2_L"
CSBI "BI24",N,N,"N2_CTRL","NO","YES"
```

```
CSBI "BI25",N,N,"N2_R1SRC","NO","YES"
CSBI "BI26",N,N,"N2_R2SRC","NO","YES"
CSAO "AO1",Y,Y,"REF_1","%"
CSAO "AO2",Y,Y,"REF_2","%"
CSAO "AO3",Y,Y,"ACCEL_1","s"
CSAO "AO4",Y,Y,"DECEL_1","s"
CSAO "AO5",Y,Y,"CURR_LIM","A"
CSAO "AO6",Y,Y,"PID1_GN","%"
CSAO "AO7",Y,Y,"PID1_I","s"
CSAO "AO8",Y,Y,"PID1_D","s"
CSAO "AO9",Y,Y,"PID1_FLT","s"
CSAO "AO10",Y,Y,PID2_GN","%"
CSAO "AO11",Y,Y,"PID2_I","s"
CSAO "AO12",Y,Y,"PID2_D","s"
CSAO "AO13",Y,Y,"PID2_FLT","s"
CSAO "AO14",Y,Y,"CMD_AO_1","%"
CSAO "AO15",Y,Y,"CMD_AO_2","%"
CSAO "AO16",Y,Y,"PI2_STPT","%"
CSAO "AO17",Y,Y,"MIN_SPD","%"
CSAO "AO18",Y,Y,"MAX_SPD","%"
CSAO "AO19",Y,Y,"MB_PARAM",""
CSAO "AO20",Y,Y,"MB_DATA",""
CSBO "BO1",Y,Y,"START","STOP","START"
CSBO "BO2",Y,Y,"REVERSE","FWD","REV"
CSBO "BO3",Y,Y,"PAN_LOCK","OPEN","LOCKED"
CSBO "BO4",Y,Y,"RUN_ENAB","DISABLE","ENABLE"
CSBO "BO5",Y,Y,"R1/2_SEL","EXT_1","EXT_2"
CSBO "BO6",Y,Y,"FLT_RSET","-","RESET"
CSBO "BO7",Y,Y,"CMD_RO_1","OFF","ON"
CSBO "BO8",Y,Y,"CMD_RO_2","OFF","ON"
CSBO "BO9",Y,Y,"CMD_RO_3","OFF","ON"
CSBO "BO10",Y,Y,"CMD_RO_4","OFF","ON"
CSBO "BO11",Y,Y,"CMD_RO_5","OFF","ON"
CSBO "BO12",Y,Y,"CMD_RO_6","OFF","ON"
CSBO "BO13",Y,Y,"RST_RTIM","OFF","RESET"
CSBO "BO14",Y,Y,"RST_KWH","OFF","RESET"
CSBO "BO15",Y,Y,"PID_SEL","SET1","SET2"
CSBO "BO16",Y,Y,"N2_LOC_C","AUTO","N2"
CSBO "BO17",Y,Y,"N2_LOC_R","EUTO","N2"
CSBO "BO18",Y,Y,"SAV_PRMS","OFF","SAVE"
CSBO "BO19",Y,Y,"READ_MB","NO","READ"
CSBO "BO20",Y,Y,"WRITE_MB","NO","WRITE"
```

FLN Protocol Technical Data

Overview

The FLN fieldbus connection to the ACH550 drives is based on an industry standard RS-485 physical interface. The FLN (Floor Level Network) Fieldbus protocol is a serial communication protocol, used by the Siemens APOGEE® system. The ACH550 interface is specified in Siemens application 2734.

Supported Features

The ACH550 supports all required FLN features.

Reports

The ACH550 provides seven pre-defined reports. Using a report request generated from the FLN fieldbus controller, select one of the following sets of points. By providing views of selected points, these reports are often easier to work with than views of the full point database.

ABB ACH550

FLN ABB ACH550 Report			
Point		Subpoint Name	Data
#	Type		
01	LAO	CTLR ADDRESS	Each host FLN application (e.g. CIS or Insight) controls both the particular data reported for each point, and the report format.
02	LAO	APPLICATION	
20	LAO	OVRD TIME	
29	LDO	DAY.NIGHT	

Startup

FLN Startup Report			
Point		Subpoint Name	Data
#	Type		
21	LDI	FWD.REV	Each host FLN application (e.g. CIS or Insight) controls both the particular data reported for each point, and the report format.
22	LDO	CMD FWD.REV	
23	LDI	STOP.RUN	
24	LDO	CMD STP.STRT	
25	LDI	EXT1.2 ACT	
26	LDO	EXT1.2 CMD	
34	LDI	ENA.DIS ACT	
35	LDO	ENA.DIS CMD	
36	LDI	FLN LOC ACT	
60	LAO	INPUT REF1	
61	LAO	INPUT REF2	
68	LDO	FLN LOC CTL	
69	LDO	FLN LOC REF	

FLN Startup Report			
Point		Subpoint Name	Data
#	Type		
94	LDO	RESET FAULT	

Overview

FLN Overview Report			
Point		Subpoint Name	Data
#	Type		
03	LAI	FREQ OUTPUT	Each host FLN application (e.g. CIS or Insight) controls both the particular data reported for each point, and the report format.
04	LAI	PCT OUTPUT	
05	LAI	SPEED	
06	LAI	CURRENT	
07	LAI	TORQUE	
08	LAI	POWER	
09	LAI	DRIVE TEMP	
10	LAI	DRIVE KWH	
11	LAI	DRIVE MWH	
12	LAI	RUN TIME	
13	LAI	DC BUS VOLT	
14	LAI	OUTPUT VOLT	
17	LAI	MOTOR TEMP	
18	LAI	MREV COUNTER	
21	LDI	FWD.REV	
23	LDI	STOP.RUN	
25	LDI	EXT1.2 ACT	
27	LDI	DRIVE READY	
28	LDI	AT SETPOINT	
33	LDI	HANDAUTO ACT	
34	LDI	ENA.DIS ACT	
36	LDI	FLN LOC ACT	

Drive I/O

FLN Drive I/O Report			
Point		Subpoint Name	Data
#	Type		
40	LDO	RO 1 COMMAND	Each host FLN application (e.g. CIS or Insight) controls both the particular data reported for each point, and the report format.
41	LDO	RO 2 COMMAND	
42	LDO	RO 3 COMMAND	
43	LDO	RO 4 COMMAND	
44	LDO	RO 5 COMMAND	

FLN Drive I/O Report			
Point		Subpoint Name	Data
#	Type		
45	LDO	RO 6 COMMAND	
46	LAO	AO 1 COMMAND	
47	LAO	AO 2 COMMAND	
70	LDI	DI 1 ACTUAL	
71	LDI	DI 2 ACTUAL	
72	LDI	DI 3 ACTUAL	
73	LDI	DI 4 ACTUAL	
74	LDI	DI 5 ACTUAL	
75	LDI	DI 6 ACTUAL	
76	LDI	RO 1 ACTUAL	
77	LDI	RO 2 ACTUAL	
78	LDI	RO 3 ACTUAL	
79	LDI	RO 4 ACTUAL	
80	LDI	RO 5 ACTUAL	
81	LDI	RO 6 ACTUAL	
85	LAI	AO 2 ACTUAL	

Drive Config

FLN Drive Config. Report			
Point		Subpoint Name	Data
#	Type		
30	LAO	CURRENT LIM	Each host FLN application (e.g. CIS or Insight) controls both the particular data reported for each point, and the report format.
31	LAO	ACCEL TIME 1	
32	LAO	DECEL TIME 1	
48	LDO	RST RUN TIME	
49	LDO	RESET KWH	
59	LDO	LOCK PANEL	
66	LDO	SPD OUT MIN	
67	LDO	SPD OUT MAX	
95	LAO	MBOX PARAM	
96	LAO	MBOX DATA	
97	LDO	MBOX READ	
98	LDO	MBOX WRITE	

Process PID

FLN Process PID Report			
Point		Subpoint Name	Data
#	Type		
15	LAI	PRC PID FBCK	Each host FLN application (e.g. CIS or Insight) controls both the particular data reported for each point, and the report format.
16	LAI	PRC PID DEV	
50	LAO	PRC PID GAIN	
51	LAO	PRC PID ITIM	
52	LAO	PRC PID DTIM	
53	LAO	PRC PID DFIL	
54	LDO	PRC PID SEL	
60	LAO	INPUT REF1	
61	LAO	INPUT REF2	
82	LAI	AI 1 ACTUAL	
83	LAI	AI 2 ACTUAL	
84	LAI	AO 1 ACTUAL	
85	LAI	AO 2 ACTUAL	

External PID

FLN External PID Report			
Point		Subpoint Name	Data
#	Type		
55	LAO	EXT PID GAIN	Each host FLN application (e.g. CIS or Insight) controls both the particular data reported for each point, and the report format.
56	LAO	EXT PID ITIM	
57	LAO	EXT PID DTIM	
58	LAO	EXT PID DFIL	
62	LAO	EXT PID STPT	
63	LAI	EXT PID FBCK	
64	LAI	EXT PID DEV	
82	LAI	AI 1 ACTUAL	
83	LAI	AI 2 ACTUAL	
84	LAI	AO 1 ACTUAL	
85	LAI	AO 2 ACTUAL	

Scaling Drive Feedback Values

Feedback values are provided with units of percent, where 0% and 100% correspond to the range of the sensor being used to measure the control variable. These points have default units in Hz. If other units are required:

- Unbundle these points with appropriate slopes and intercepts.
- The new intercept equals the lowest value of the desired range.

- Calculate the new slope as follows:

$$\text{New Slope} = \frac{\text{(Desired Range, i.e. high - low values) x (Slope of Existing Point)}}{\text{Range of Existing Point}}$$

$$= \frac{\text{(60 Hz - 0 Hz) x (0.01)}}{\text{100\% - 0\%}} = 0.006$$

Example – You are controlling water temperature from a cooling tower using the ACH550 to control a fan. The temperature sensor has a range of 30 to 250 degrees Fahrenheit.

To unbundle the set point (INPUT REF 2), for commanding in degrees Fahrenheit, where 0…60 Hz is equal to 30…250° F:

New Intercept = 30 (the temperature that corresponds to 0%)

$$\text{New Slope} = \frac{\text{(Desired Range) x (Slope of Existing Point)}}{\text{Range of Existing Point}}$$

$$= \frac{\text{(250° F - 30° F) x (0.1)}}{\text{100\% - 0\%}} = 0.22$$

To unbundle the feedback (PRC PID FBCK) for monitoring in degrees Fahrenheit:

New Intercept = 30

$$\text{New Slope} = \frac{\text{(Desired Range) x (Slope of Existing Point)}}{\text{Range of Existing Point}}$$

$$= \frac{\text{(250° F - 30° F) x (0.01)}}{\text{100\% - 0\%}} = 0.022$$

Loop Gains

PRC PID GAIN (Point 50) and PRC PID ITIM (Point 51) are PID parameters similar to the P and I gains in the APOGEE TECs. Because the ABB PI loop and the Siemens loop are structured differently, there is no a one-to-one correspondence between the gains. The following formulas allow translation from ABB gains to Siemens gains and vice versa:

- To convert from ABB PI gains to Siemens P and I gains:

$$\text{P GAIN}_{\text{Siemens}} = \text{PI GAIN}_{\text{ABB}} \text{ x } 0.0015$$

$$\text{I GAIN}_{\text{Siemens}} = \frac{\text{PI GAIN}_{\text{ABB}}}{\text{PI GAIN}_{\text{ABB}}} \text{ x } 0.0015$$

- To convert from Siemens P and I gains to ABB PI gains:

$$\text{P GAIN}_{\text{ABB}} = \text{PI GAIN}_{\text{Siemens}} \text{ x } 667$$

$$\text{I GAIN}_{\text{ABB}} = \frac{\text{PI GAIN}_{\text{Siemens}}}{\text{PI GAIN}_{\text{Siemens}}} \text{ x } 667$$

Point Database

The following table lists the point database for FLN / ACH550 (Application 2734).

FLN Point Database								
Point		Subpoint Name	Factory Default	Engr. Units	Slope	Intercept	On Text	Off Text
#	Type		(SI Units)					
01	LAO	CTLR ADDRESS	99	-	1	0	-	-
02	LAO	APPLICATION	2734	-	1		-	-
{03}	LAI	FREQ OUTPUT	0	Hz	0.1	0	-	-
{04}	LAI	PCT OUTPUT	0	PCT	0.1	0	-	-
{05}	LAI	SPEED	0	RPM	1	0	-	-
{06}	LAI	CURRENT	0	A	0.1		-	-
{07}	LAI	TORQUE	0	PCT	0.1	-200	-	-
{08}	LAI	POWER	0 (0)	HP (KW)	0.134 0.1	0 0	-	-
{09}	LAI	DRIVE TEMP	77 (25)	° F (° C)	0.18 (0.1)	32 0	-	-
{10}	LAI	DRIVE KWH	0	KWH	1		-	-
{11}	LAI	DRIVE MWH	0	MWH	1		-	-
{12}	LAI	RUN TIME	0	HRS	1		-	-
{13}	LAI	DC BUS VOLT	0	V	1		-	-
{14}	LAI	OUTPUT VOLT	0	V	1		-	-
{15}	LAI	PRC PID FBCK	0	PCT	0.1		-	-
{16}	LAI	PRC PID DEV	0	PCT	0.1		-	-
{17}	LAI	MOTOR TEMP	77(25)	° F (° C)	1.8 (1)	32 0	-	-
{18}	LAI	MREV COUNTER	0	MREV	1	0	-	-
20	LAO	OVRD TIME	1	hrs	1	0	-	-
{21}	LDI	FWD.REV	FWD	-	1	0	REV	FWD
{22}	LDO	CMD FWD.REV	FWD	-	1	0	REV	FWD
{23}	LDI	STOP.RUN	STOP	-	1	0	RUN	STOP
{24}	LDO	CMD STP.STRT	STOP	-	1	0	RUN	STOP
{25}	LDI	EXT1.2 ACT	EXT1	-	1	0	EXT2	EXT1
{26}	LDO	EXT1.2 CMD	EXT1	-	1	0	EXT2	EXT1
{27}	LDI	DRIVE READY	NOTRDY	-	1	0	READY	NOTRDY
{28}	LDI	AT SETPOINT	NO	-	1	0	YES	NO
{29}	LDO	DAY.NIGHT	DAY	-	1	0	NIGHT	DAY
30	LAO	CURRENT LIM	0	A	0.1	0	-	-
31	LAO	ACCEL TIME 1	300	sec	0.1	0	-	-
32	LAO	DECEL TIME 1	300	sec	0.1	0	-	-
{33}	LDI	HANDAUTO ACT	AUTO	-	1	0	HAND	AUTO

FLN Point Database								
Point		Subpoint Name	Factory Default	Engr. Units	Slope	Intercept	On Text	Off Text
#	Type		(SI Units)					
{34}	LDI	ENA.DIS ACT	DISABL	-	1	0	ENABLE	DISABL
{35}	LDO	ENA.DIS CMD	DISABL	-	1	0	ENABLE	DISABL
{36}	LDI	FLN LOC ACT	AUTO	-	1	0	FLN	AUTO
{37}	LDI	CTL SRC	NO	-	1	0	YES	NO
{38}	LDI	FLN REF1 SRC	NO	-	1	0	YES	NO
{39}	LDI	FLN REF2 SRC	NO	-	1	0	YES	NO
{40}	LDO	RO 1 COMMAND	OFF	-	1	0	ON	OFF
{41}	LDO	RO 2 COMMAND	OFF	-	1	0	ON	OFF
{42}	LDO	RO 3 COMMAND	OFF	-	1	0	ON	OFF
{43}	LDO	RO 4 COMMAND	OFF	-	1	0	ON	OFF
{44}	LDO	RO 5 COMMAND	OFF	-	1	0	ON	OFF
{45}	LDO	RO 6 COMMAND	OFF	-	1	0	ON	OFF
{46}	LAO	AO 1 COMMAND	PCT	PCT	0.1	0	-	-
{47}	LAO	AO 2 COMMAND	PCT	PCT	0.1	0	-	-
48	LDO	RST RUN TIME	NO	-	1	0	RESET	NO
49	LDO	RESET KWH	NO	-	1	0	RESET	NO
50	LAO	PRC PID GAIN	10	PCT	0.1	0	-	-
51	LAO	PRC PID ITIM	600	SEC	0.1	0	-	-
52	LAO	PRC PID DTIM	0	SEC	0.1	0	-	-
53	LAO	PRC PID DFIL	10	SEC	0.1	0	-	-
54	LDO	PRC PID SEL	SET1	-	1	0	SET2	SET1
55	LAO	EXT PID GAIN	10	PCT	0.1	0	-	-
56	LAO	EXT PID ITIM	600	SEC	0.1	0	-	-
57	LAO	EXT PID DTIM	0	SEC	0.1	0	-	-
58	LAO	EXT PID DFIL	10	SEC	0.1	0	-	-
59	LDO	LOCK PANEL	UNLOCK	-	1	0	LOCK	UNLOCK
{60}	LAO	INPUT REF1	0	PCT	0.1	0	-	-
{61}	LAO	INPUT REF2	0	PCT	0.1	0	-	-
{62}	LAO	EXT PID STPT	0	PCT	0.1	0	-	-
{63}	LAI	EXT PID FBCK	0	PCT	0.1	0	-	-
{64}	LAI	EXT PID DEV	0	PCT	0.1	0	-	-

FLN Point Database								
Point		Subpoint Name	Factory Default	Engr. Units	Slope	Intercept	On Text	Off Text
#	Type		(SI Units)					
66	LDO	SPD OUT MIN	0	PCT	0.1	0	-	-
67	LDO	SPD OUT MAX	1000	PCT	0.1	0	-	-
{68}	LDO	FLN LOC CTL	AUTO	-	1	0	FLN	AUTO
{69}	LDO	FLN LOC REF	AUTO	-	1	0	FLN	AUTO
{70}	LDI	DI 1 ACTUAL	OFF	-	1	0	ON	OFF
{71}	LDI	DI 2 ACTUAL	OFF	-	1	0	ON	OFF
{72}	LDI	DI 3 ACTUAL	OFF	-	1	0	ON	OFF
{73}	LDI	DI 4 ACTUAL	OFF	-	1	0	ON	OFF
{74}	LDI	DI 5 ACTUAL	OFF	-	1	0	ON	OFF
{75}	LDI	DI 6 ACTUAL	OFF	-	1	0	ON	OFF
{76}	LDI	RO 1 ACTUAL	OFF	-	1	0	ON	OFF
{77}	LDI	RO 2 ACTUAL	OFF	-	1	0	ON	OFF
{78}	LDI	RO 3 ACTUAL	OFF	-	1	0	ON	OFF
{79}	LDI	RO 4 ACTUAL	OFF	-	1	0	ON	OFF
{80}	LDI	RO 5 ACTUAL	OFF	-	1	0	ON	OFF
{81}	LDI	RO 6 ACTUAL	OFF	-	1	0	ON	OFF
{82}	LAI	AI 1 ACTUAL	0	PCT	0.1	0	-	-
{83}	LAI	AI 2 ACTUAL	0	PCT	0.1	0	-	-
{84}	LAI	AO 1 ACTUAL	0	MA	0.1	0	-	-
{85}	LAI	AO 2 ACTUAL	0	MA	0.1	0	-	-
{86}	LDI	OK.ALARM	OK	-	1	0	ALARM	OK
{87}	LDI	OK.MAINT	OK	-	1	0	MAINT	OK
{88}	LAI	ALARM WORD 1	-	-	1	0	-	-
{89}	LAI	ALARM WORD 2	-	-	1	0	-	-
{90}	LAI	LAST FAULT	-	-	1	0	-	-
{91}	LAI	PREV FAULT 1	-	-	1	0	-	-
{92}	LAI	PREV FAULT 2	-	-	1	0	-	-
{93}	LDI	OK.FAULT	OK	-	1	0	FAULT	OK
{94}	LDO	RESET FAULT	NO	-	1	0	RESET	NO
{95}	LAO	MBOX PARAM	-	-	1	0	-	-
{96}	LAO	MBOX DATA	-	-	1	0	-	-
{97}	LDO	MBOX READ	DONE	-	1	0	READ	DONE
{98}	LDO	MBOX WRITE	DONE	-	1	0	WRITE	DONE
{99}	LAO	ERROR STATUS	-	-	1	0	-	-

a. Points not listed are not used in this application.

b. A single value in a column means that the value is the same in English units and in SI units.

c. Point numbers that appear in brackets { } may be unbundled at the field panel.

Detailed Point Descriptions

FLN Detailed Point Descriptions			
Point		**Description**	**Drive Parameter**
1	CTRL ADDRESS	The FLN address of the drive. It can be set by FLN and by the panel.	5302
2	APPLICATION	The Application ID for FLN on the ACH550. This ID is assigned by Siemens for each unique application. It correlates directly to a particular point list approved at the time of release. Therefore, this point list shall remain fixed once approval is granted. Any changes to the point list shall require a new Application ID and re-approval by Siemens. The Application ID assigned to ACH550 is 2934.	
3	FREQ OUTPUT	The output frequency applied to the motor, in Hertz.	0103
4	PCT OUTPUT	The ratio of output frequency or speed to the corresponding maximum rating, depending on control mode. • For scalar mode, it is the ratio of Output Frequency (parameter 0103) to Maximum Frequency (parameter 2008). • For speed mode, it is the ratio Speed (parameter 0102) to Maximum Speed (2002).	None. This ratio is calculated by the FLN application.
5	SPEED	The calculated speed of the motor, in RPM.	0102
6	CURRENT	The measured output current.	0104
7	TORQUE	The calculated output torque of the motor as a percentage of nominal torque.	0105
8	POWER	The measured output power in KW. The FLN point definition also supports horsepower by selecting English units.	0106
	DRIVE TEMP	The measured heatsink temperature, in ° C. The FLN point definition also supports ° F by selecting English units.	0110
10	DRIVE KWH	The drive's cumulative power consumption in kilowatt-hours. This value may be reset by commanding FLN point 49, RESET KWH.	0115
11	DRIVE MWH	The drive's cumulative power consumption in megawatt hours. This value cannot be reset.	0141
12	RUN TIME	The drive's cumulative run time in hours. This value may be reset by commanding FLN point 48, RESET RUN TIME.	0114
13	DC BUS VOLT	The DC bus voltage level of the drive.	0107
14	OUTPUT VOLT	The AC output voltage applied to the motor.	0109
15	PRC PID FBCK	The Process PID feedback signal.	0130
16	PRC PID DEV	The deviation of the Process PID output signal from its setpoint.	0132
17	MOTOR TEMP	The measured motor temperature as set up in Group 35.	0145
18	ROTATION CNT	The motor's cumulative revolution count, in mega-revolutions.	0142
19	N/A		
20	OVRD TIME	1 of the 5 mandatory FLN points required for compatibility with Siemens control systems. It has no functionality in the drive application.	None

FLN Detailed Point Descriptions			
Point		**Description**	**Drive Parameter**
21	FWD.REV ACT	Indicates the rotational direction of the motor, regardless of control source (1 = REV, 0 = FWD).	
22	FWD.REV CMD	Commanded by FLN to change the rotational direction of the drive. • Parameter 1001 must be set to COMM for FLN to control the direction of the motor by EXT1. • Parameter 1002 must be set to COMM for FLN to control the direction of the motor by EXT2.	
23	RUN.STOP ACT	Indicates the drive's run status, regardless of control source (1 = RUN, 0 = STOP).	
24	RUN.STOP CMD	Commanded by FLN to start the drive. • Parameter 1001 must be set to COMM for FLN to control the run state of the drive by EXT1. • Parameter 1002 must be set to COMM for FLN to have this control.	
25	EXT1.2 ACT	Indicates whether External 1 or External 2 is the active control source (1 = EXT2, 0 = EXT1).	
26	EXT1.2 CMD	Commanded by FLN to select External 1 or External 2 as the active control source (1 = EXT2, 0 = EXT1). Parameter 1102 must be set to COMM for FLN to have this control.	
27	DRIVE READY	Indicates the drive is ready to accept a run command (1 = READY, 0 = NOTRDY).	
28	AT SETPOINT	Indicates the drive has reached its commanded setpoint (1 = YES, 0 = NO)	
29	DAY.NIGHT	1 of the 5 mandatory FLN points required for compatibility with Siemens control systems. It has no functionality in the drive application.	None
30	CURRENT LIM	Sets the output current limit of the drive.	2003
31	ACCEL TIME 1	Sets the acceleration time for Ramp 1.	2202
32	DECEL TIME 1	Sets the deceleration time for Ramp 1.	2203
33	HANDAUTO ACT	Indicates whether the drive is in Hand or Auto control (1 = HAND, 0 = AUTO).	
34	ENA.DIS ACT	Indicates the status of the Run Enable command, regardless of its source (1 = ENABLE, 0 = DISABL).	
35	ENA.DIS CMD	Commanded by FLN to assert the Run Enable command (1 = ENABLE, 0 = DISABL). Parameter 1601 must be set to COMM for FLN to have this control.	
36	FLN LOC ACT	Indicates if the drive has been placed in "FLN LOCAL" mode by commanding either point 68 (FLN LOC CTL) or point 69 (FLN LOC REF). Commanding either of these points to FLN (1) "steals" control from its normal source and places in under FLN control. Note that the HAND mode of the panel has priority over FLN local control.	

FLN Detailed Point Descriptions			
Point		**Description**	**Drive Parameter**
37	FLN CTL SRC	Indicates if FLN is a source for control inputs (1 = YES, 0 = NO). Note that this status point is true if any of the following control inputs are from FLN: Run/Stop, Ext1/2 Select or Run Enable.	
38	FLN REF1 SRC	Indicates if FLN is the source for speed reference 1 (1 = YES, 0 = NO).	
39	FLN REF2 SRC	Indicates if FLN is the source for speed reference 2 (1 = YES, 0 = NO).	
40	RO1 COMMAND	Controls the output state of Relay 1. Parameter 1401 must be set to COMM for FLN to have this control (1 = ON, 0 = OFF).	0134, bit 0
41	RO2 COMMAND	Controls the output state of Relay 2. Parameter 1402 must be set to COMM for FLN to have this control (1 = ON, 0 = OFF).	0134, bit 1
42	RO3 COMMAND	Controls the output state of Relay 3. Parameter 1403 must be set to COMM for FLN to have this control (1 = ON, 0 = OFF).	0134, bit 2
43	RO4 COMMAND	Controls the output state of Relay 4. Access to relay 4 require ACH550 option OREL. Parameter 1410 must be set to COMM for FLN to have this control (1 = ON, 0 = OFF).	0134, bit 3
44	RO5 COMMAND	Controls the output state of Relay 5. Access to relay 5 require ACH550 option OREL. Parameter 1411 must be set to COMM for FLN to have this control (1 = ON, 0 = OFF).	0134, bit 4
45	RO6 COMMAND	Controls the output state of Relay 6. Access to relay 6 require ACH550 option OREL. Parameter 1412 must be set to COMM for FLN to have this control (1 = ON, 0 = OFF).	0134, bit 5
46	AO1 COMMAND	Controls Analog Output 1. Parameter 1501 must be set to this value for FLN to have this control.	0135 (COMM VALUE 1)
47	AO2 COMMAND	Controls Analog Output 2. Parameter 1507 must be set to this value for FLN to have this control.	0136 (COMM VALUE 2)
48	RESET RUN TIME	Commanded by FLN to reset the cumulative run timer (1 = RESET, 0 = NO). The control input is rising-edge sensitive, so, once the command is issued, this point automatically returns to its inactive state. This "momentary" operation avoids any need for an explicit command to clear the point before a subsequent reset can be issued.	
49	RESET KWH	Commanded by FLN to reset the cumulative kilowatt-hour counter (1 = RESET, 0 = NO). The control input is rising-edge sensitive, so, once the command is issued, this point automatically returns to its inactive state. This "momentary" operation avoids any need for an explicit command to clear the point before a subsequent reset can be issued.	

FLN Detailed Point Descriptions			
Point		**Description**	**Drive Parameter**
50	PRC PID GAIN	Sets the proportional gain of the active Process PID set, as selected by Point 54, PRC PID SEL (1 = SET2, 0 = SET1).	4001 (SET1) 4101 (SET2)
51	PRC PID ITIM	Sets the integration time of the active Process PID set, as selected by Point 54, PRC PID SEL (1 = SET2, 0 = SET1).	4002 (SET1) 4102 (SET2)
52	PRC PID DTIM	Sets the derivation time of the active Process PID set, as selected by Point 54, PRC PID SEL (1 = SET2, 0 = SET1).	4001 (SET1) 4101 (SET2)
53	PRC PID DFIL	Sets the time constant for the error-derivative of the active Process PID set, as selected by Point 54, PRC PID SEL (1 = SET2, 0 = SET1).	4004 (SET1) 4104 (SET2)
54	PRC PID SEL	Selects the active Process PID set (1 = SET2, 0 = SET1).	4027
55	EXT PID GAIN	Sets the proportional gain of the External PID controller.	4201
56	EXT PID ITIM	Sets the integration time of the External PID controller.	4202
57	EXT PID DTIM	Sets the derivation time of the External PID controller.	4203
58	EXT PID DFIL	Sets the time constant for the error-derivative of the External PID controller.	4204
59	LOCK PANEL	Command by FLN to lock the panel and prevent parameter changes (1 = LOCK, 0 = UNLOCK).	1602
60	INPUT REF 1	Sets Input Reference 1. Parameter 1102 must be set to COMM for FLN to control this value.	
61	INPUT REF 2	Sets Input Reference 2. Parameter 1106 must be set to COMM for FLN to control this value.	
62	EXT PID STPT	The setpoint for the External PID controller. The function of this point requires parameter 4210, PID Setpoint Select, to be set to 19 (Internal).	4211
63	EXT PID FBCK	The External PID feedback signal.	0131
64	EXT PID DEV	The deviation of the External PID output signal from its setpoint.	0133
65	N/A		
66	SPD OUT MIN	Sets the minimum output speed of the drive as a percentage of the motor nominal rating.	2007 (SCALAR) 2001 (SPEED)
67	SPD OUT MAX	Sets the maximum output speed of the drive as a percentage of the motor nominal rating.	2008 (SCALAR) 2002 (SPEED)
68	FLN LOC CTL	Commanded by FLN to temporarily "steal" start/stop control of the drive from its normal source and place it under FLN control. This functionality is analogous to placing the drive in HAND mode at the panel, with the control being taken by FLN instead. HAND mode at the panel has priority over this point. Thus, this point is only effective in temporarily taking control from the digital inputs or some other internal control functionality.	

FLN Detailed Point Descriptions			
Point		**Description**	**Drive Parameter**
69	FLN LOC REF	Commanded by FLN to temporarily "steal" input reference control of the drive from its normal source and place it under FLN control. This functionality is analogous to placing the drive in HAND mode at the panel, with the reference control being taken by FLN instead. HAND mode at the panel has priority over this point. Thus, this point is only effective in temporarily taking control from the analog inputs or some other internal control functionality.	
70	DI 1 ACTUAL	Indicates the status of Digital Input 1 (1 = ON, 0 = OFF).	0118, bit 2
71	DI 2 ACTUAL	Indicates the status of Digital Input 2 (1 = ON, 0 = OFF).	0118, bit 1
72	DI 3 ACTUAL	Indicates the status of Digital Input 3 (1 = ON, 0 = OFF).	0118, bit 0
73	DI 4 ACTUAL	Indicates the status of Digital Input 4 (1 = ON, 0 = OFF).	0119, bit 2
74	DI 5 ACTUAL	Indicates the status of Digital Input 5 (1 = ON, 0 = OFF).	0119, bit 1
75	DI 6 ACTUAL	Indicates the status of Digital Input 6 (1 = ON, 0 = OFF).	0119, bit 0
76	RO 1 ACTUAL	Indicates the status of Relay Output 1 (1 = ON, 0 = OFF).	0122, bit 2
77	RO 2 ACTUAL	Indicates the status of Relay Output 2 (1 = ON, 0 = OFF).	0122, bit 1
78	RO 3 ACTUAL	Indicates the status of Relay Output 3 (1 = ON, 0 = OFF).	0122, bit 0
79	RO 4 ACTUAL	Indicates the status of Relay Output 4 (1 = ON, 0 = OFF).	0123, bit 2
80	RO 5 ACTUAL	Indicates the status of Relay Output 5 (1 = ON, 0 = OFF).	0123, bit 1
81	RO 6 ACTUAL	Indicates the status of Relay Output 6 (1 = ON, 0 = OFF).	0123, bit 0
82	AI 1 ACTUAL	Indicates the input level of Analog Input 1.	0120
83	AI 2 ACTUAL	Indicates the input level of Analog Input 2.	0121
84	AO 1 ACTUAL	Indicates the output level of Analog Output 1.	0124
85	AO 2 ACTUAL	Indicates the output level of Analog Output 2.	0125
86	OK.ALARM	Indicates the current alarm state of the drive (1 = ALARM, 0 = OK).	
87	OK.MAINT	Indicates the current maintenance state of the drive (1 = MAINT, 0 = OK). Maintenance triggers are configured in drive parameter Group 29.	
88	ALARM WORD1	This point is a bit-field indicating active alarms in the drive.	0308
89	ALARM WORD2	This point is a bit-field indicating active alarms in the drive.	0309
90	LAST FAULT	This point is first in the drive's fault log and indicates the most recent fault declared.	0401
91	PREV FAULT 1	This point is second in the drive's fault log and indicates the previous fault declared.	0412
92	PREV FAULT 2	This point is last in the drive's fault log and indicates the oldest fault in the log.	0413
93	OK.FAULT	Indicates the current fault state of the drive (1 = FAULT, 0 = OK).	

FLN Detailed Point Descriptions			
Point		**Description**	**Drive Parameter**
94	RESET FAULT	Command by FLN to reset a faulted drive (1 = RESET, 0 = NO). Parameter 1604 must be set to COMM for FLN to control this state. The control input is rising-edge sensitive, so, once the command is issued, this point automatically returns to its inactive state. This "momentary" operation avoids any need for an explicit command to clear the point before a subsequent reset can be issued.	
95	MBOX PARAM	Sets the parameter to be used by the mailbox function.	
96	MBOX DATA	Sets or indicates the data value of the mailbox function.	
97	MBOX READ	Command by FLN to read the parameter value specified by Point 95, MBOX PARAM. The parameter value is returned in Point 96, MBOX DATA. The control input is rising-edge sensitive, so, once the command is issued, this point automatically returns to its inactive state. This "momentary" operation avoids any need for an explicit command to clear the point before a subsequent reset can be issued.	
98	MBOX WRITE	Command by FLN to write the data value specified by Point 96, MBOX DATA, to the parameter value specified by Point 95, MBOX PARAM. The control input is rising-edge sensitive, so, once the command is issued, this point automatically returns to its inactive state. This "momentary" operation avoids any need for an explicit command to clear the point before a subsequent reset can be issued.	
99	ERROR STATUS	1 of the 5 mandatory FLN points required for compatibility with Siemens control systems. It has no functionality in the drive application.	None

BACnet Technical Data

Protocol Implementation Conformance Statement (PICS)

PICS Summary

BACnet Standard Device Profile. This version of ACH550 BACnet fully conforms to the 'Application-Specific Controller' standard device profile (B-ASC).

Services Supported. The following services are supported by the ACH550:

- I-Am (Response to Who-Is, also broadcast on power-up & other reset)
- I-Have (Response to Who-Has)
- ReadProperty
- WriteProperty
- DeviceCommunicationControl
- ReinitializeDevice

Data Link Layer. The ACH550 implements MS/TP (Master) Data Link Layer. All standard MS/TP baud rates are supported (9600, 19200, 38400 & 76800).

MAC ID / Device Object Instance. The ACH550 supports separate MAC ID and Device Object Instance parameters:

- Set the MAC ID using drive parameter 5302. Default: 5302 = 1.
- Set the Device Object Instance using drive parameter 5311. Default: 5311 = 0, which causes the MAC ID to "double" as the Device Object Instance. For a separate Device Object Instance value, set using a non-zero value for drive parameter 5311.

Automatic Baud Rate Detection. Set the communication baud rate using drive parameter 5303. However, this value is "overridden" if automatic baud rate detection is enabled and a different baud rate is detected. By default, autobaud detection is disabled – enable by setting drive parameter 5314 to 1. When autobaud detection is enabled, drive parameter 5315 displays the detected baud rate.

Note! Autobaud detection samples for, and adjusts to, only the standard MS/TP baud rates (9600, 19200, 38400 & 76800).

Max Info Frames Property. Configure the Device Object Max Info Frames property using drive parameter 5312. Default: 5312 = 1.

Max Master Property. Configure the Device Object Max Master property using drive parameter 5313. Default: 5313 = 127.

Statement

This statement is part of this Standard and is required for its use.

BACnet Protocol Implementation Conformance Statement	
Date:	June 1, 2004
Vendor Name:	ABB, Inc
Product Name:	Low Voltage AC Motor Drive
Product Model Number:	ACH550
Applications Software Version:	0500
Firmware Revision:	201C
BACnet Protocol Revision:	2
Product Description:	The ACH550 is a high-performance adjustable frequency drive specifically designed for commercial automation applications. This product supports native BACnet, connecting directly to the MS/TP LAN. All standard MS/TP baud rates are supported, as well as master mode functionality. Over BACnet, the drive can be fully controlled as a standard adjustable frequency drive. In addition, up to 16 configurable I/O ports are available over BACnet for user applications.
BACnet Standardized Device Profile (Annex L):	☐ BACnet Operator Workstation (B-OWS) ☐ BACnet Building Controller (B-BC) ☐ BACnet Advanced Application Controller (B-AAC) ☒ BACnet Application Specific Controller (B-ASC) ☐ BACnet Smart Sensor (B-SS) ☐ BACnet Smart Actuator (B-SA)
List all BACnet Interoperability Building Blocks Supported (Annex K):	DS-RP-B, DS-WP-B, DM-DDB-B, DM-DOB-B, DM-DCC-B, DM-RD-B.
Segmentation Capability:	☐ Segmented requests supported. Window Size ____ ☐ Segmented responses supported. Window Size ____
Standard Object Types Supported: An object type is supported if it may be present in the device. For each standard Object Type supported provide the following data: 1) Whether objects of this type are dynamically creatable using the CreateObject service 2) Whether objects of this type are dynamically detectable using the DeleteObject service 3) List of the optional properties supported 4) List of all properties that are writable where not otherwise required by this standard 5) List of proprietary properties and for each its property identifier, datatype, and meaning 6) List of any property range restrictions	See table at "Object/Property Support Matrix" on page 211.

BACnet Protocol Implementation Conformance Statement	
Data Link Layer Options:	☐ BACnet IP, (Annex J) ☐ BACnet IP, (Annex J), Foreign Device ☐ ISO 8802-3, Ethernet (Clause 7) ☐ ANSI/ATA 878.1, 2.5 Mb. ARCNET (Clause 8) ☐ ANSI/ATA 878.1, RS-485 ARCNET (Clause 8), baud rate(s) ___ ☒ MS/TP master (Clause 9), baud rate(s): 9600, 19200, 38400, 76800 ☐ MS/TP slave (Clause 9), baud rate(s): ___ ☐ Point-To-Point, EIA 232 (Clause 10), baud rate(s): ___ ☐ Point-To-Point, modem, (Clause 10), baud rate(s): ___ ☐ LonTalk, (Clause 11), medium: _____ ☐ Other: _____
Device Address Binding: Is static device binding supported? (This is currently necessary for two-way communication with MS/TP slaves and certain other devices.)	☐ Yes ☒ No
Networking Options:	☐ Router, Clause 6 - List all routing configurations, e.g., ARCNET-Ethernet, Ethernet-MS/TP, etc. ☐ Annex H, BACnet Tunneling Router over IP ☐ BACnet/IP Broadcast Management Device (BBMD)
Does the BBMD support registrations by Foreign Devices?	☐ Yes ☐ No
Character Sets Supported: Indicating support for multiple character sets does not imply that they can all be supported simultaneously.	☒ ANSI X3.4 ☐ IBM™/Microsoft™ DBCS ☐ ISO 8859-1 ☐ ISO 10646 (UCS-2) ☐ ISO 10646 (UCS-4) ☐ JIS C 6226
If this product is a communication gateway, describe the types of non-BACnet equipment/networks(s) that the gateway supports:	

BACnet Object Definitions

Object/Property Support Matrix

The following table summarizes the Object Types/Properties Supported:

Property	Object Type						
	Device	Binary Input	Binary Output	Binary Value	Analog Input	Analog Output	Analog Value
Object Identifier	✓	✓	✓	✓	✓	✓	✓
Object Name	✓	✓	✓	✓	✓	✓	✓
Object Type	✓	✓	✓	✓	✓	✓	✓
System Status	✓						
Vendor Name	✓						
Vendor Identifier	✓						
Model Name	✓						
Firmware Revision	✓						
Appl Software Revision	✓						
Protocol Version	✓						
Protocol Revision	✓						
Services Supported	✓						
Object Types Supported	✓						
Object List	✓						
Max APDU Length	✓						
Segmentation Support	✓						
APDU Timeout	✓						
Number APDU Retries	✓						
Max Master	✓						
Max Info Frames	✓						
Device Address Binding	✓						
Database Revision	✓						
Present Value		✓	✓	✓	✓	✓	✓
Status Flags		✓	✓	✓	✓	✓	✓
Event State		✓	✓	✓	✓	✓	✓
Out-of-Service		✓	✓	✓	✓	✓	✓
Units					✓	✓	✓
Priority Array			✓	✓ *		✓	✓ *
Relinquish Default			✓	✓ *		✓	✓ *
Polarity		✓	✓				
Active Text		✓	✓	✓			
Inactive Text		✓	✓	✓			

* For commandable values only.

Binary Input Object Instance Summary

The following table summarizes the Binary Input Objects supported:

Instance ID	Object Name	Description	Active/ Inactive Text	Present Value Access Type
BI0	RO 1 ACT	This object indicates the status of Relay Output 1.	ON/OFF	R
BI1	RO 2 ACT	This object indicates the status of Relay Output 2.	ON/OFF	R
BI2	RO 3 ACT	This object indicates the status of Relay Output 3.	ON/OFF	R
BI3	RO 4 ACT	This object indicates the status of Relay Output 4 (requires OREL-01 option).	ON/OFF	R
BI4	RO 5 ACT	This object indicates the status of Relay Output 5 (requires OREL-01 option)	ON/OFF	R
BI5	RO 6 ACT	This object indicates the status of Relay Output 6 (requires OREL-01 option)	ON/OFF	R
BI6	DI 1 ACT	This object indicates the status of Digital Input 1.	ON/OFF	R
BI7	DI 2 ACT	This object indicates the status of Digital Input 2.	ON/OFF	R
BI8	DI 3 ACT	This object indicates the status of Digital Input 3.	ON/OFF	R
BI9	DI 4 ACT	This object indicates the status of Digital Input 4.	ON/OFF	R
BI10	DI 5 ACT	This object indicates the status of Digital Input 5.	ON/OFF	R
BI11	DI 6 ACT	This object indicates the status of Digital Input 6.	ON/OFF	R

Note! For Present Value Access Types, R = Read-only, W = Writeable, C = Commandable. Commandable values support priority arrays & relinquish defaults.

Binary Output Object Instance Summary

The following table summarizes the Binary Output Objects supported:

Instance ID	Object Name	Description	Active/ Inactive Text	Present Value Access Type
BO0	RO1 COMMAND	This object controls the output state of Relay 1. This control requires that parameter 1401 value = COMM.	ON/OFF	C
BO1	RO2 COMMAND	This object controls the output state of Relay 2. This control requires that parameter 1402 value = COMM.	ON/OFF	C
BO2	RO3 COMMAND	This object controls the output state of Relay 3. This control requires that parameter 1403 value = COMM.	ON/OFF	C

Instance ID	Object Name	Description	Active/ Inactive Text	Present Value Access Type
BO3	RO4 COMMAND	This object controls the output state of Relay 4. This control requires that parameter 1410 value = COMM (also requires OREL-01 option).	ON/OFF	C
BO4	RO5 COMMAND	This object controls the output state of Relay 5. This control requires that parameter 1411 value = COMM (also requires OREL-01 option).	ON/OFF	C
BO5	RO6 COMMAND	This object controls the output state of Relay 6. This control requires that parameter 1412 value = COMM (also requires OREL-01 option).	ON/OFF	C

Note! For Present Value Access Types, R = Read-only, W = Writeable, C = Commandable. Commandable values support priority arrays & relinquish defaults.

Binary Value Object Instance Summary

The following table summarizes the Binary Value Objects supported:

Instance ID	Object Name	Description	Active/Inactive Text	Present Value Access Type
BV0	RUN/STOP ACT	This object indicates the drive Run Status, regardless of the control source.	RUN/STOP	R
BV1	FWD/REV ACT	This object indicates the motor's rotation direction, regardless of the control source.	REV/FWD	R
BV2	FAULT ACT	this object indicates the drive's fault status.	FAULT/OK	R
BV3	EXT 1/2 ACT	This object indicates which control source is active: External 1 or External 2.	EXT2/EXT1	R
BV4	HAND/AUTO ACT	This object indicates whether the drive is under Hand or Auto control.	HAND/AUTO	R
BV5	ALARM ACT	This object indicates the drive's alarm status.	ALARM/OK	R
BV6	MAINT REQ	This object indicates the drive's maintenance status. Refer to Group 29 in the drive's parameter descriptions.	MAINT/OK	R
BV7	DRIVE READY	This object indicates whether the drive is ready to accept a run command.	READY/NOT READY	R
BV8	AT SETPOINT	This object indicates whether the drive is at the commanded setpoint.	YES/NO	R

Instance ID	Object Name	Description	Active/Inactive Text	Present Value Access Type
BV9	RUN ENA ACT	This object indicates the Run Enable command status, regardless of the control source.	ENABLE/ DISABLE	R
BV10	RUN/STOP CMD	This object commands a drive start. Control requires either: • Parameter 1001 value = COMM for control by EXT1 or • Parameter 1002 value = COMM for control by EXT2.	RUN/STOP	C
BV11	FWD/REV CMD	This object commands a motor rotation direction change. Control requires either: • Parameter 1001 value = COMM for control by EXT1 or • Parameter 1002 value = COMM for control by EXT2.	REV/FWD	C
BV12	RUN ENA CMD	This object commands Run Enable. Control requires parameter 1601 value = COMM.	ENABLE/ DISABLE	C
BV13	EXT 1/2 CMD	This object selects ext1 or ext2 as the active control source. Control requires parameter 1102 value = COMM.	EXT2/EXT1	C
BV14	FAULT RESET	This object resets a faulted drive. The command is rising-edge triggered. Control requires parameter 1604 value = COMM.	RESET/NO	C
BV15	MBOX READ	This object reads a parameter (defined by AV25 MBOX PARAM) and returns it in AV26 MBOX DATA.	READ/RESET	W
BV16	MBOX WRITE	This object writes the data value specified by AV26, MBOX DATA, to a parameter (defined by AV25, MBOX PARAM).	WRITE/RESET	W
BV17	LOCK PANEL	This object locks the panel and prevents parameter changes. The corresponding drive parameter is 1602.	LOCK/UNLOCK	W
BV18	CTL OVERRIDE CMD	This object commands the drive into BACnet Control Override. In this mode, BACnet takes drive control from the normal source. However, the control panel's HAND mode has priority over BACnet Control Override.	ON/OFF	C

Instance ID	Object Name	Description	Active/Inactive Text	Present Value Access Type
BV19	CTL OVERRIDE ACT	This object indicates whether the drive is in BACnet Control Override. (See BV18.)	ON/OFF	R
BV20	START ENABLE 1	This object commands start enable1. Control requires pa;ram 1608 value=COMM.	ENABLE/ DISABLE	C
BV21	START ENABLE 2	This object commands start enable1. Control requires pa;ram 1608 value=COMM.	ENABLE/ DISABLE	C

Note! For Present Value Access Types, R = Read-only, W = Writeable, C = Commandable. Commandable values support priority arrays & relinquish defaults.

Analog Input Object Instance Summary

The following table summarizes the Analog Input Objects supported:

Instance ID	Object Name	Description	Units	Present Value Access Type
AI0	ANALOG INPUT 1	This object indicates the value of Analog Input 1. The corresponding drive parameter is 0120.	Percent	R
AI1	ANALOG INPUT 2	This object indicates the value of Analog Input 2. The corresponding drive parameter is 0121.	Percent	R

Note! For Present Value Access Types, R = Read-only, W = Writeable, C = Commandable. Commandable values support priority arrays & relinquish defaults.

Analog Output Object Instance Summary

The following table summarizes the Analog Output Objects supported:

Instance ID	Object Name	Description	Units	Present Value Access Type
AO0	AO 1 COMMAND	This object controls Analog Output 1. The corresponding drive parameter is 0135, COMM VALUE 1. Control requires parameter 1501 value = 135.	Percent	C
AO1	AO 2 COMMAND	This object controls Analog Output 2. The corresponding drive parameter is 0136, COMM VALUE 2. Control requires parameter 1507 value = 136.	Percent	C

Note! For Present Value Access Types, R = Read-only, W = Writeable, C = Commandable. Commandable values support priority arrays & relinquish defaults.

Analog Value Object Instance Summary

The following table summarizes the Analog Value Objects supported:

Instance ID	Object Name	Description	Units	Present Value Access Type
AV0	OUTPUT SPEED	This object indicates the calculated motor speed in RPM. The corresponding drive parameter is 0102.	RPM	R
AV1	OUTPUT FREQ	This object indicates the output frequency applied to the motor in Hz. The corresponding drive parameter is 0103.	Hertz	R
AV2	DC BUS VOLT	This object indicates the drive's DC bus voltage level. The corresponding drive parameter is 0107.	Volts	R
AV3	OUTPUT VOLT	This object indicates the AC output voltage applied to the motor. The corresponding drive parameter is 0109.	Volts	R
AV4	CURRENT	This object indicates the measured output current. The corresponding drive parameter is 0104.	Amps	R
AV5	TORQUE	This object indicates the calculated motor output torque as a percentage of nominal torque. The corresponding drive parameter is 0105.	Percent	R
AV6	POWER	This object indicates the measured output power in kW. The corresponding drive parameter is 0106.	Kilowatts	R
AV7	DRIVE TEMP	This object indicates the measured heatsink temperature in °C. The corresponding drive parameter is 0110.	°C	R
AV8	KWH (R)	This object indicates, in kW hours, the drive's accumulated energy usage since the last reset. The value can be reset to zero. The corresponding drive parameter is 0115.	kWh	W
AV9	KWH (NR)	This object indicates the drive's accumulated energy usage in kW hours. The value cannot be reset.	kWh	R
AV10	PRC PID FBCK	This object is the Process PID feedback signal. The corresponding drive parameter is 0130.	Percent	R
AV11	PRC PID DEV	This object is the Process PID output signal's deviation from its setpoint. The corresponding drive parameter is 0132.	Percent	R
AV12	EXT PID FBCK	This object is the External PID feedback signal. The corresponding drive parameter is 0131.	Percent	R

Instance ID	Object Name	Description	Units	Present Value Access Type
AV13	EXT PID DEV	This object is the External PID output signal's deviation from its setpoint. The corresponding drive parameter is 0133.	Percent	R
AV14	RUN TIME (R)	This object indicates, in hours, the drive's accumulated run time since the last reset. The value can be reset to zero. The corresponding drive parameter is 0114.	Hours	R
AV15	MOTOR TEMP	This object indicates the drive's motor temperature, as set up in parameter Group 35. The corresponding drive parameter is 0145.	°C	R
AV16	INPUT REF 1	This object sets Input Reference 1. Control requires parameter 1102 value = COMM.	Percent	C
AV17	INPUT REF 2	This object sets either: • Input Reference 2. Control requires parameter 1106 value = COMM. • Process PID setpoint. Control requires parameter 1106 value = PID1 OUT and parameter 4010 value = COMM.	Percent	C
AV18	LAST FLT	This object indicates the most recent fault entered in the drive's fault log. The corresponding drive parameter is 0401.	None	R
AV19	PREV FLT 1	This object indicates the second most recent fault entered in the drive's fault log. The corresponding drive parameter is 0412.	None	R
AV20	PREV FLT 2	This object indicates the third most recent fault entered in the drive's fault log. The corresponding drive parameter is 0413.	None	R
AV21	AO 1 ACT	This object indicates Analog Output 1's level. The corresponding drive parameter is 0124.	Milliamps	R
AV22	AO 2 ACT	This object indicates Analog Output 2's level. The corresponding drive parameter is 0125.	Milliamps	R
AV23	ACCEL1 TIME	This object sets the Ramp1 acceleration time. The corresponding drive parameter is 2202.	Seconds	W
AV24	DECEL1 TIME	This object sets the Ramp1 deceleration time. The corresponding drive parameter is 2203.	Seconds	W
AV25	MBOX PARAM	This object defines the parameter to be read or written to by the mailbox function. See BV15 and BV16.	None	W
AV26	MBOX DATA	This object holds the mailbox function's parameter value – a value that was read, or is to be written. See BV15 and BV16.	None	W

Instance ID	Object Name	Description	Units	Present Value Access Type
AV27	EXT PID STPT	This object sets the External PID controller setpoint. The corresponding drive parameter is 4211. Control requires parameter 4210, PID SETPOINT SEL, value = 19 (INTERNAL).	Percent	C

Note! For Present Value Access Types, R = Read-only, W = Writeable, C = Commandable. Commandable values support priority arrays & relinquish defaults.

Fieldbus Adapter

Overview

The ACH550 can be set up to accept control from an external system using standard serial communication protocols. When using serial communication, the ACH550 can either:

- Receive all of its control information from the fieldbus, or
- Be controlled from some combination of fieldbus control and other available control locations, such as digital or analog inputs, and the control panel.

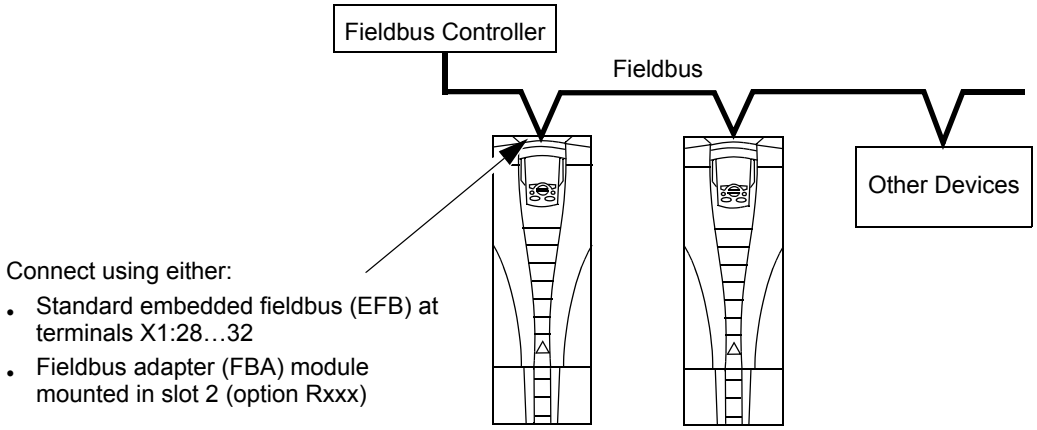

Two basic serial communications configurations are available:

- Embedded fieldbus (EFB) – See "Embedded Fieldbus" on page 152.
- Fieldbus adapter (FBA) – With one of the optional FBA modules in the drive's expansion slot 2, the drive can communicate to a control system using one of the following protocols:
  - Profibus-DP®
  - LonWorks®
  - CANopen®
  - DeviceNet®
  - ControlNet®
  - Ethernet®

The ACH550 detects automatically which communication protocol is used by the plug-in fieldbus adapter. The default settings for each protocol assume that the profile used is the protocol's industry-standard drive profile (e.g. PROFIdrive for PROFIBUS, AC/DC Drive for DeviceNet). All of the FBA protocols can also be configured for the ABB Drives profile.

Configuration details depend on the protocol and profile used.These details are provided in a user's manual supplied with the FBA module.

Details for the ABB Drives profile (which apply for all protocols) are provided in "ABB Drives Profile Technical Data" on page 229.

Control Interface

In general, the basic control interface between the fieldbus system and the drive consists of:

- Output Words:
  - CONTROL WORD
  - REFERENCE (speed or frequency)
  - Others: The drive supports a maximum of 15 output words. Protocols limits may further restrict the total.
- Input Words:
  - STATUS WORD
  - Actual Value (speed or frequency)
  - Others: The drive supports a maximum of 15 input words. Protocols limits may further restrict the total.

Note! The words "output" and "input" are used as seen from the fieldbus controller point of view. For example an output describes data flow from the fieldbus controller to the drive and appears as an input from the drive point of view.

The meanings of the controller interface words are not restricted by the ACH550. However, the profile used may set particular meanings.

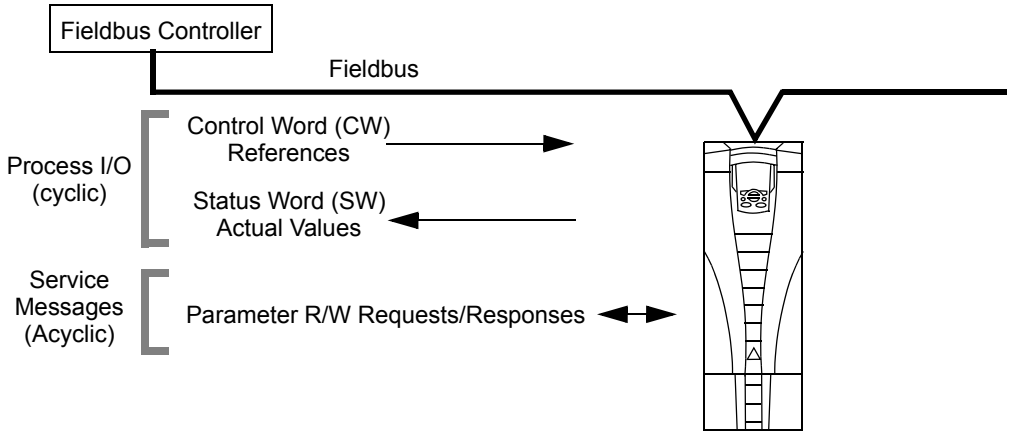

Control Word

The CONTROL WORD is the principal means for controlling the drive from a fieldbus system. The fieldbus controller sends the CONTROL WORD to the drive. The drive switches between states according to the bit-coded instructions in the CONTROL WORD. Using the CONTROL WORD requires that:

- The drive is in remote (REM) control.

- The serial communication channel is defined as the source for controlling commands from EXT1 (set using parameters 1001 EXT1 COMMANDS and 1102 EXT1/EXT2 SEL).
- The external plug-in fieldbus adapter is activated:
  - Parameter 9802 COMM PROT SEL = 4 (EXT FBA).
  - The external plug-in fieldbus adapter is configured to use the drive profile mode or drive profile objects.

The content of the CONTROL WORD depends on the protocol/profile used. See the user's manual provided with the FBA module and/or the "ABB Drives Profile Technical Data".

Status Word

The STATUS WORD is a 16-bit word containing status information, sent by the drive to the fieldbus controller. The content of the STATUS WORD depends on the protocol/profile used. See the user's manual provided with the FBA module and/or the "ABB Drives Profile Technical Data" section.

Reference

The contents of each REFERENCE word:

- Can be used, as speed or frequency reference.
- Is a 16-bit word comprised of a sign bit and a 15-bit integer.
- Negative references (indicating reversed rotation direction) are indicated by the two's complement of the corresponding positive reference value.

The use of a second reference (REF2) is supported only when a protocol is configured for the ABB Drives profile.

Reference scaling is fieldbus type specific. See the user's manual provided with the FBA module and/or the following sections as appropriate:

- "ABB Drives Profile Technical Data"
- "Generic Profile Technical Data"

Actual Values

Actual Values are 16-bit words containing information on selected operations of the drive. Drive Actual Values (for example, group 01 parameters) can be mapped to Input Words using group 51 parameters (protocol-dependent, but typically parameters 5104…5126).

Planning

Network planning should address the following questions:

- What types and quantities of devices must be connected to the network?
- What control information must be sent down to the drives?
- What feedback information must be sent from the drives to the controlling system?

Mechanical and Electrical Installation – FBA

Warning! Connections should be made only while the drive is disconnected from the power source.

Overview

The FBA (fieldbus adapter) is a plug-in module that fits in the drive's expansion slot 2. The module is held in place with plastic retaining clips and two screws. The screws also ground the shield for the module cable, and connect the module GND signals to the drive control board.

On installation of the module, electrical connection to the drive is automatically established through the 34-pin connector.

Mounting Procedure

Note! Install the input power and motor cables first.

1. Insert the module carefully into the drive expansion slot 2 until the retaining clips lock the module into position.
2. Fasten the two screws (included) to the stand-offs.

Note! Correct installation of the screws is essential for fulfilling the EMC requirements and for proper operation of the module.

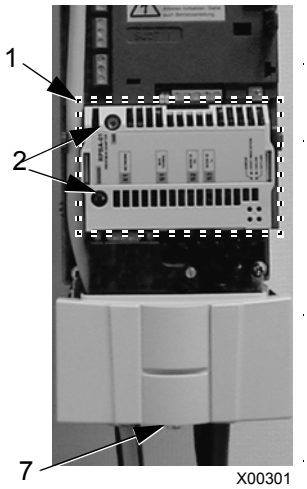

3. Open the appropriate knockout in the conduit box and install the cable clamp for the network cable.
4. Route the network cable through the cable clamp.
5. Connect the network cable to the module's network connector.
6. Tighten the cable clamp.
7. Install the conduit box cover (1 screw).
8. For configuration information see the following:
   - "Communication Set-up – FBA" below.
   - "Activate Drive Control Functions – FBA" on page 223.
   - The protocol specific documentation provided with the module.

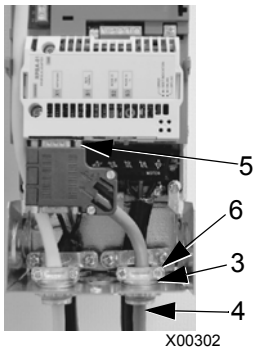

Communication Set-up – FBA

Serial Communication Selection

To activate the serial communication, use parameter 9802 COMM PROTOCOL SEL. Set 9802 = 4 (EXT FBA).

Serial Communication Configuration

Setting 9802, together with mounting a particular FBA module, automatically sets the appropriate default values in parameters that define the communication process. These parameters and descriptions are defined in the user's manual supplied with the FBA module.

- Parameter 5101 is automatically configured.
- Parameters 5102…5126 are protocol-dependent and define, for example, the profile used, and additional I/O words. These parameters are referred to as the fieldbus configuration parameters. See the user's manual provided with the FBA module for details on the fieldbus configuration parameters.
- Parameter 5127 forces the validation of changes to parameters 5102…5126. If parameter 5127 is not used, changes to parameters 5102…5126 take affect only after the drive power is cycled.
- Parameters 5128…5133 provide data about the FBA module currently installed (e.g. component versions and status).

The Parameters Description section lists the group 51 parameters.

Activate Drive Control Functions – FBA

Fieldbus control of various drive functions requires configuration to:

- Tell the drive to accept fieldbus control of the function.
- Define as a fieldbus input, any drive data required for control.
- Define as a fieldbus output, any control data required by the drive.

The following sections describe, at a general level, the configuration required for each control function. The last column in each table below is deliberately blank. See the user's manual supplied with the FBA module for the appropriate entry.

Start/Stop Direction Control

Using the fieldbus for start/stop/direction control of the drive requires:

- Drive parameter values set as defined below.
- Fieldbus controller supplied command(s) in the appropriate location. (The location is defined by the Protocol Reference, which is protocol dependent.)

Drive Parameter		Value	Description	Protocol Reference
1001	EXT1 COMMANDS	10 (COMM)	Start/Stop controlled by fieldbus with Ext1 selected.	

Drive Parameter		Value	Description	Protocol Reference
1002	EXT2 COMMANDS	10 (COMM)	Start/Stop by controlled fieldbus with Ext2 selected.	
1003	DIRECTION	3 (REQUEST)	Direction controlled by fieldbus.	

Input Reference Select

Using the fieldbus to provide input reference to the drive requires:

- Drive parameter value set as defined below.
- Fieldbus controller supplied reference word(s) in the appropriate location. (The location is defined by the Protocol Reference, which is protocol dependent.)

Drive Parameter		Value	Description	Protocol Reference
1102	EXT1/EXT2 SEL	8 (COMM)	Ref. selected by fieldbus. (Required only if 2 references used.)	
1103	REF1 SEL	8 (COMM) 9 (COMM+AI1) 10 (COMM*AI1)	Input reference 1supplied by fieldbus.	
1106	REF2 SEL	8 (COMM) 9 (COMM+AI) 10 (COMM*AI)	Input reference 1 supplied by fieldbus. (Required only if 2 references used.)	

Note! Multiple references are supported only when using the ABB Drives profile.

Scaling

Where required, REFERENCES can be scaled. See the "Reference Scaling" in the following sections, as appropriate:

- "ABB Drives Profile Technical Data"
- "Generic Profile Technical Data"

System Control

Using the fieldbus for miscellaneous drive control requires:

- Drive parameter values set as defined below.
- Fieldbus controller command(s) in the appropriate location. (The location is defined by the Protocol Reference, which is protocol dependent.)

Drive Parameter		Value	Description	Protocol Reference
1601	RUN ENABLE	7 (COMM)	Run enable by fieldbus.	
1604	FAULT RESET SEL	8 (COMM)	Fault reset by fieldbus.	
1607	PARAM SAVE	1 (SAVE)	Saves altered parameters to memory (then value returns to 0).	

Relay Output Control

Using the fieldbus for relay output control requires:

- Drive parameter values set as defined below.
- Fieldbus controller supplied, binary coded, relay command(s) in the appropriate location. (The location is defined by the Protocol Reference, which is protocol dependent.)

Drive Parameter		Value	Description	Protocol Reference
1401	RELAY OUTPUT 1	35 (COMM) 36 (COMM(-1))	Relay Output 1 controlled by fieldbus.	
1402	RELAY OUTPUT 2		Relay Output 2 controlled by fieldbus.	
1403	RELAY OUTPUT 3		Relay Output 3 controlled by fieldbus.	
1410[1]	RELAY OUTPUT 4		Relay Output 4 controlled by fieldbus.	
1411[1]	RELAY OUTPUT 5		Relay Output 5 controlled by fieldbus.	
1412[1]	RELAY OUTPUT 6		Relay Output 6 controlled by fieldbus.	

1. More than 3 relays requires the addition of a relay extension module.

Note! Relay status feedback occurs without configuration as defined below.

Drive Parameter		Value	Protocol Reference
0122	RO 1-3 STATUS	Relay 1…3 status.	
0123	RO 4-6 STATUS	Relay 4…6 status.	

Analog Output Control

Using the fieldbus for analog output control (e.g. PID setpoint) requires:

- Drive parameter values set as defined below.
- Fieldbus controller supplied analog value(s) in the appropriate location. (The location is defined by the Protocol Reference, which is protocol dependent.)

Drive Parameter		Value	Description	Protocol Reference
1501	AO1 CONTENT SEL	135 (COMM VALUE 1)	Analog Output 1 controlled by writing to parameter 0135.	–
0135	COMM VALUE 1	–		
1502 … 1505	AO1 CONTENT MIN … MAXIMUM AO1	Set appropriate values.	Used for scaling	–
1506	FILTER AO1		Filter time constant for AO1.	–
1507	AO2 CONTENT SEL	136 (COMM VALUE 2)	Analog Output 2 controlled by writing to parameter 0136.	–
0136	COMM VALUE 2	–		
1508 … 1511	AO2 CONTENT MIN … MAXIMUM AO2	Set appropriate values.	Used for scaling	–
1512	FILTER AO2		Filter time constant for AO2.	–

PID Control Setpoint Source

Using the fieldbus for the PID control setpoint requires:

- Drive parameter values set as defined below.
- Fieldbus controller supplied setpoint value in the appropriate location. (As defined in "Analog Output Control" above.)

Drive Parameter		Value	Description	Protocol Reference
4010	SETPOINT SEL	8 (COMM VALUE 1) 9 (COMM + AI1) 10 (COMM*AI1)	Setpoint is 0135 value (+/-/* AI1)	–

Communication Fault

When using fieldbus control, specify the drive's action if serial communication is lost.

Drive Parameter		Value	Description	Protocol Reference
3018	COMM FAULT FUNC	0 (NOT SEL) 1 (FAULT) 2 (CONST SP7) 3 (LAST SPEED)	Set for appropriate drive response.	–
3019	COMM FAULT TIME	Set time delay before acting on a communication loss.		–

Feedback from the Drive – FBA

Inputs to the controller (drive outputs) have pre-defined meanings established by the protocol. This feedback does not require drive configuration. The following table lists a sample of feedback data. For a complete listing, see all parameters listed in "Parameter Descriptions".

Drive Parameter		Protocol Reference
0102	SPEED	
0103	FREQ OUTPUT	
0104	CURRENT	
0105	TORQUE	
0106	POWER	
0107	DC BUS VOLT	
0109	OUTPUT VOLTAGE	
0301	FB STATUS WORD – bit 0 (STOP)	
0301	FB STATUS WORD – bit 2 (REV)	
0118	DI1-3 STATUS – bit 1 (DI3)	

Scaling

To scale the drive parameter values see the "Actual Value Scaling" in the following sections, as appropriate:

- "ABB Drives Profile Technical Data"
- "Generic Profile Technical Data"

Diagnostics – FBA

Fault Handling

The ACH550 provides fault information as follows:

- The control panel display shows a fault code and text. See "Diagnostics" starting on page 239 for a complete description.
- Parameters 0401 LAST FAULT, 0402 PREVIOUS FAULT1 and 0403 PREVIOUS FAULT2 store the most recent faults.
- For fieldbus access, the drive reports faults as a hexadecimal value, assigned and coded according to the DRIVECOM specification. See table below. Not all profiles support requesting fault codes using this specification. For profiles that support this specification, the profile documentation defines the proper fault request process.

Drive Fault Code		Fieldbus Fault Code (DRIVECOM specification)
1	OVERCURRENT	2310h
2	DC OVERVOLT	3210h
3	DEV OVERTEMP	4210h
4	SHORT CIRC	2340h
5	Reserved	FF6Bh
6	DC UNDERVOLT	3220h
7	AI1 LOSS	8110h
8	AI2 LOSS	8110h
9	MOT TEMP	4310h
10	PANEL LOSS	5300h
11	ID RUN FAIL	FF84h
12	MOTOR STALL	7121h
14	EXTERNAL FLT 1	9000h
15	EXTERNAL FLT 2	9001h
16	EARTH FAULT	2330h
17	UNDERLOAD	FF6Ah
18	THERM FAIL	5210h
19	OPEX LINK	7500h
20	OPEX PWR	5414h
21	CURR MEAS	2211h

Drive Fault Code		Fieldbus Fault Code (DRIVECOM specification)
22	SUPPLY PHASE	3130h
23	ENCODER ERR	7301h
24	OVERSPEED	7310h
25	Reserved	FF80h
26	DRIVE ID	5400h
27	CONFIG FILE	630Fh
28	SERIAL 1 ERR	7510h
29	EFB CONFIG FILE	6306h
30	FORCE TRIP	FF90h
31	EFB 1	FF92h
32	EFB 2	FF93h
33	EFB 3	FF94h
34	MOTOR PHASE	FF56h
35	OUTPUT WIRING	FF95h
36	INCOMP SWTYPE	630Fh
101	SERF CORRUPT	FF55h
102	Reserved	FF55h
103	SERF MACRO	FF55h
104	Reserved	FF55h
105	Reserved	FF55h
201	DSP T1 OVERLOAD	6100h
202	DSP T2 OVERLOAD	6100h
203	DSP T3 OVERLOAD	6100h
204	DSP STACK ERROR	6100h
205	Reserved	5000h
206	OMIO ID ERROR	5000h
207	EFB LOAD ERR	6100h
1000	PAR HZRPM	6320h
1001	PAR PFAREFNG	6320h
1002	Reserved (obsolete)	6320h
1003	PAR AI SCALE	6320h
1004	PAR AO SCALE	6320h
1005	PAR PCU 2	6320h
1006	EXT ROMISSING	6320h
1007	PAR FBUSMISSING	6320h
1008	PAR PFAWOSCALAR	6320h
1009	PAR PCU 1	6320h
1010	PAR PFA OVERRIDE	6320h

Drive Fault Code		Fieldbus Fault Code (DRIVECOM specification)
1011	PAR OVERRIDE PARS	6320h
1012	PAR PFC IO 1	6320h
1013	PAR PFC IO 2	6320h
1014	PAR PFC IO 3	6320h

Serial Communication Diagnostics

Besides the drive fault codes, the FBA module has diagnostic tools. Refer to the user's manual supplied with the FBA module.

ABB Drives Profile Technical Data

Overview

The ABB Drives profile provides a standard profile that can be used on multiple protocols, including protocols available on the FBA module. This section describes the ABB Drives profile implemented for FBA modules.

Control Word

As described earlier in "Control Interface" the CONTROL WORD is the principal means for controlling the drive from a fieldbus system.

The following table and the state diagram later in this sub-section describe the CONTROL WORD content for the ABB Drives profile.

ABB Drives Profile (FBA) CONTROL WORD				
Bit	**Name**	**Value**	**Commanded State**	**Comments**
0	OFF1 CONTROL	1	READY TO OPERATE	Enter READY TO OPERATE
		0	EMERGENCY OFF	Drive ramps to stop according to currently active deceleration ramp (2203 or 2205) Normal command sequence: • Enter OFF1 ACTIVE • Proceed to READY TO SWITCH ON, unless other interlocks (OFF2, OFF3) are active.
1	OFF2 CONTROL	1	OPERATING	Continue operation (OFF2 inactive)
		0	EMERGENCY OFF	Drive coasts to stop. Normal command sequence: • Enter OFF2 ACTIVE • Proceed to SWITCHON INHIBITED

ABB Drives Profile (FBA) CONTROL WORD				
Bit	**Name**	**Value**	**Commanded State**	**Comments**
2	OFF3 CONTROL	1	OPERATING	Continue operation (OFF3 inactive)
		0	EMERGENCY STOP	Drive stops within in time specified by parameter 2208. Normal command sequence: • Enter OFF3 ACTIVE • Proceed to SWITCH ON INHIBITED **WARNING! Be sure motor and driven equipment can be stopped using this mode.**
3	INHIBIT OPERATION	1	OPERATION ENABLED	Enter OPERATION ENABLED (Note the Run enable signal must be active. See 1601. If 1601 is set to COMM, this bit also actives the Run Enable signal.)
		0	OPERATION INHIBITED	Inhibit operation. Enter OPERATION INHIBITED
4	RAMP_OUT_ ZERO	1	NORMAL OPERATION	Enter RAMP FUNCTION GENERATOR: ACCELERATION ENABLED
		0	RFG OUT ZERO	Force ramp function generator output to Zero. Drive ramps to stop (current and DC voltage limits in force).
5	RAMP_HOLD	1	RFG OUT ENABLED	Enable ramp function. Enter RAMP FUNCTION GENERATOR: ACCELERATOR ENABLED
		0	RFG OUT HOLD	Halt ramping (Ramp Function Generator output held)
6	RAMP_IN_ ZERO	1	RFG INPUT ENABLED	Normal operation. Enter OPERATING
		0	RFG INPUT ZERO	Force Ramp Function Generator input to zero.
7	RESET	0=>1	RESET	Fault reset if an active fault exists (Enter SWITCH-ON INHIBITED). Effective if 1604 = COMM.
		0	OPERATING	Continue normal operation
8…9	Unused			
10	REMOTE_CMD	1		Fieldbus control enabled
		0		• CW ≠ 0 or Ref ≠ 0: Retain last CW and Ref. • CW = 0 and Ref = 0: Fieldbus control enabled. • Ref and deceleration/acceleration ramp are locked.
11	EXT CTRL LOC	1	EXT2 SELECT	Select external control location 2 (EXT2). Effective if 1102 = COMM.
		0	EXT1 SELECT	Select external control location 1 (EXT1). Effective if 1102 = COMM.
12…15	Unused			

Status Word

As described earlier in "Control Interface", the contents of the STATUS WORD is status information, sent by the drive to the master station. The following table and the state diagram later in this sub-section describe the status word content.

ABB Drives Profile (FBA) STATUS WORD			
Bit	**Name**	**Value**	**Description (Correspond to states/boxes in the state diagram)**
0	RDY_ON	1	READY TO SWITCH ON
		0	NOT READY TO SWITCH ON
1	RDY_RUN	1	READY TO OPERATE
		0	OFF1 ACTIVE
2	RDY_REF	1	OPERATION ENABLED
		0	OPERATION INHIBITED
3	TRIPPED	0…1	FAULT
		0	No fault
4	OFF_2_STA	1	OFF2 inactive
		0	**OFF2 ACTIVE**
5	OFF_3_STA	1	OFF3 inactive
		0	**OFF3 ACTIVE**
6	SWC_ON_INHIB	1	SWITCH-ON INHIBIT ACTIVE
		0	SWITCH-ON INHIBIT NOT ACTIVE
7	ALARM	1	Warning/alarm (See "Alarm Listing" in the "Diagnostics" section for details on alarms.)
		0	No warning/alarm
8	AT_SETPOINT	1	OPERATING**.** Actual value equals (within tolerance limits) the reference value.
		0	Actual value is outside tolerance limits (not equal to reference value).
9	REMOTE	1	Drive control location: REMOTE (EXT1 or EXT2)
		0	Drive control location: LOCAL
10	ABOVE_LIMIT	1	Supervised parameter's value ≥ supervision high limit. Bit remains "1" until supervised parameter's value < supervision low limit. See group 32, Supervision
		0	Supervised parameter's value < supervision low limit. Bit remains "0" until supervised parameter's value > supervision high limit. See group 32, Supervision
11	EXT CTRL LOC	1	External control location 2 (EXT2) selected
		0	External control location 1 (EXT1) selected
12	EXT RUN ENABLE	1	External Run Enable signal received
		0	No External Run Enable signal received
13… 15	Unused		

The state diagram below describes the start-stop function of CONTROL WORD (CW) and STATUS WORD (SW) bits.

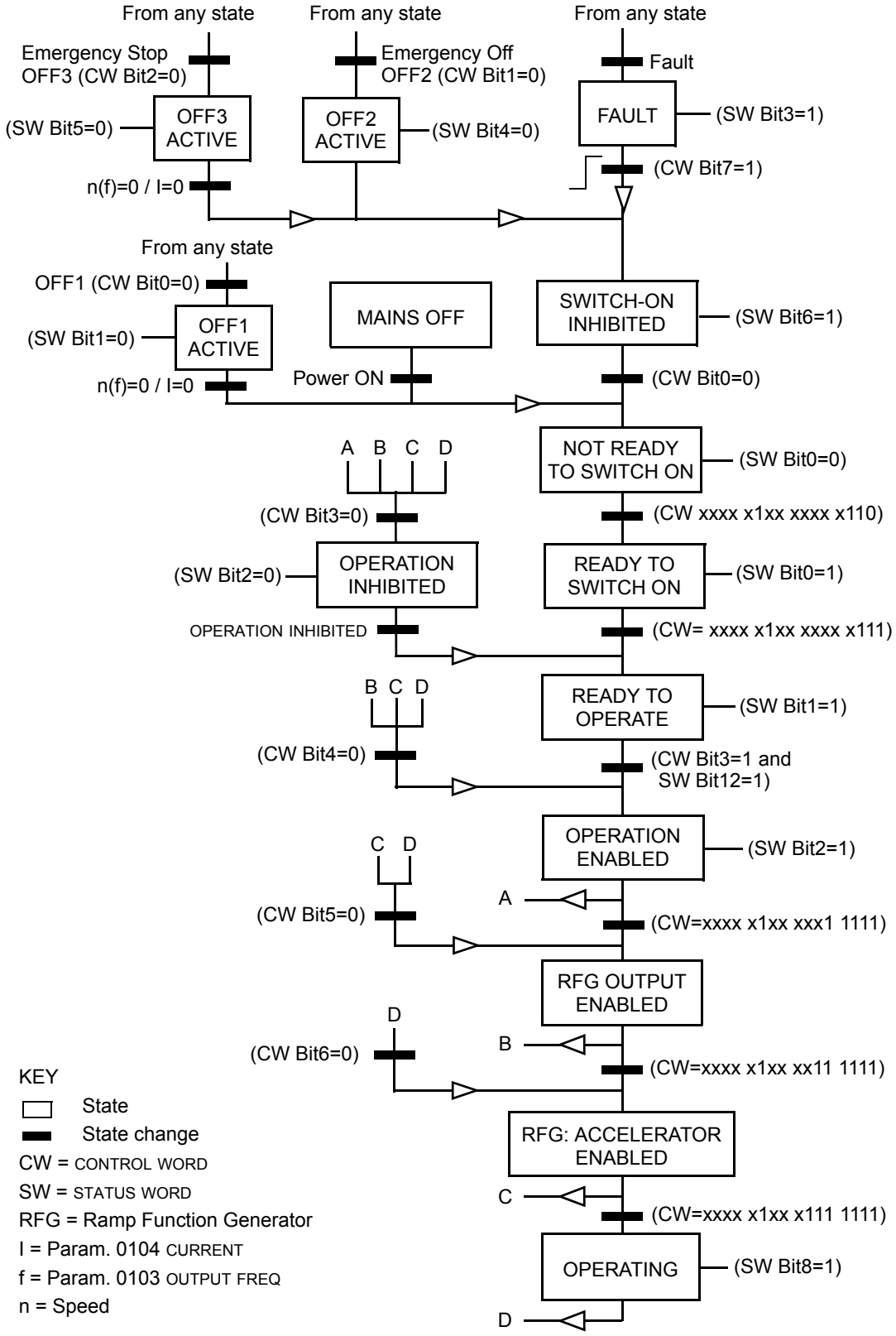

Reference

As described earlier in "Control Interface", the REFERENCE word is a speed or frequency reference.

Reference Scaling

The following table describes REFERENCE scaling for the ABB Drives profile.

ABB Drives Profile (FBA)				
Reference	**Range**	**Reference Type**	**Scaling**	**Remarks**
REF1	-32767… +32767	Speed or frequency	-20000 = -**(par. 1105)** 0 = 0 +20000 = **(par. 1105)** (20000 corresponds to 100%)	Final reference limited by 1104/1105. Actual motor speed limited by 2001/2002 (speed) or 2007/2008 (frequency).
REF2	-32767… +32767	Speed or frequency	-10000 = -**(par. 1108)** 0 = 0 +10000 = **(par. 1108)** (10000 corresponds to 100%)	Final reference limited by 1107/1108. Actual motor speed limited by 2001/2002 (speed) or 2007/2008 (frequency).
		Torque	-10000 = -**(par. 1108)** 0 = 0 +10000 = **(par. 1108)** (10000 corresponds to 100%)	Final reference limited by 2015/2017 (torque1) or 2016/2018 (torque2).
		PID Reference	-10000 = -**(par. 1108)** 0 = 0 +10000 = **(par. 1108)** (10000 corresponds to 100%)	Final reference limited by 4012/4013 (PID set1) or 4112/4113 (PID set2).

Note! The setting of parameter 1104 REF1 MIN and 1107 REF2 MIN has no effect on the scaling of references.

When parameter 1103 REF1 SELECT or 1106 REF2 SELECT is set to COMM+AI1 or COMM*AI1, the reference is scaled as follows:

ABB Drives Profile (FBA)		
Reference	**Value Setting**	**AI Reference Scaling**
REF1	COMM+AI1	COMM (%) +(AI (%) - 0.5*REF1 MAX (%)) 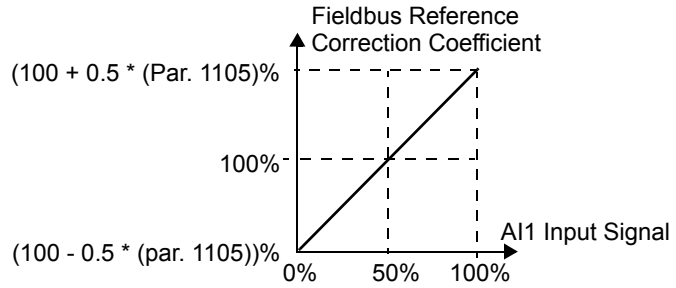

ABB Drives Profile (FBA)		
Reference	**Value Setting**	**AI Reference Scaling**
REF1	COMM*AI1	COMM (%) * (AI (%) / 0.5*REF1 MAX (%)) 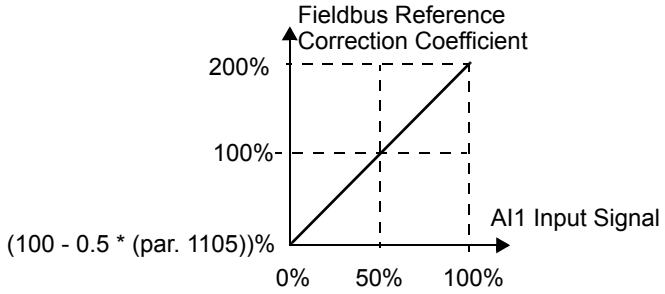
REF2	COMM+AI1	COMM (%) + (AI (%) - 0.5*REF2 MAX (%)) 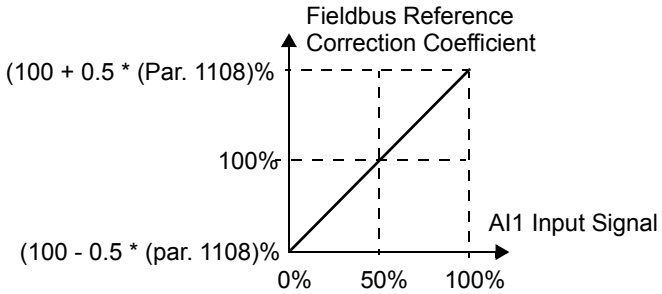
REF2	COMM*AI1	COMM (%) * (AI (%) / 0.5*REF2 MAX (%)) 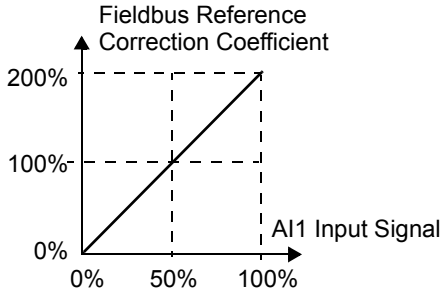

Reference Handling

Use group 10 parameters to configure for control of rotation direction for each control location (EXT1 and EXT2). The following diagrams illustrate how group 10 parameters and the sign of the fieldbus reference interact to produce REFERENCE values (REF1 and REF2). Note, fieldbus references are bipolar, that is they can be positive or negative.

ABB Drives Profile		
Parameter	**Value Setting**	**AI Reference Scaling**
1003 DIRECTION	1 (FORWARD)	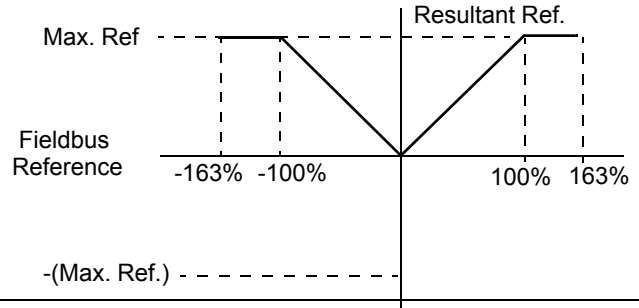
1003 DIRECTION	2 (REVERSE)	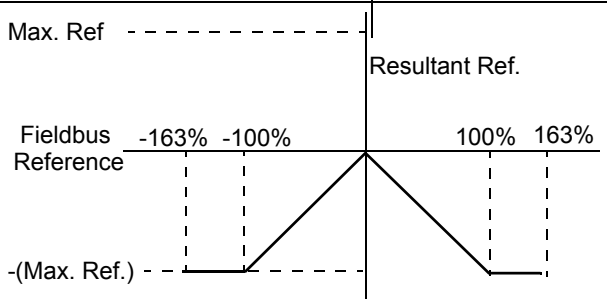
1003 DIRECTION	3 (REQUEST)	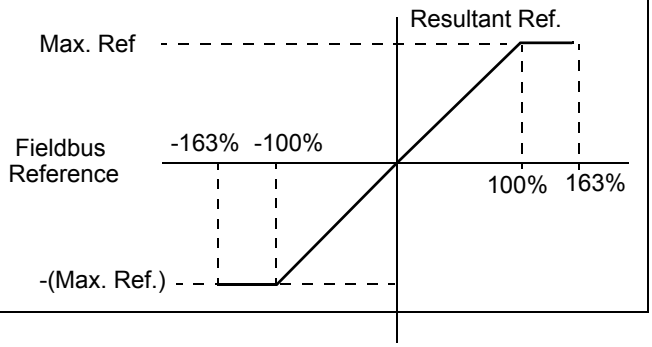

Actual Value

As described earlier in "Control Interface", Actual Values are words containing drive values.

Actual Value Scaling

The scaling of the integers sent to the fieldbus as Actual Values depends on the resolution of the selected drive parameter. Except as noted for Data Words 5 and 6 below, scale the feedback integer using the resolution listed for the parameter in the "Parameter Descriptions" section. For example:

Feedback Integer	Parameter Resolution	Scaled Value
1	0.1 mA	1 * 0.1 mA = 0.1 mA
10	0.1%	10 * 0.1% = 1%

Data words 5 and 6 are scaled as follows:

ABB Drives Profile		
Data Word	**Contents**	**Scaling**
5	ACTUAL SPEED	-20000 … +20000 = -(par. 1105) … +(par. 1105)
6	TORQUE	-10000 … +10000 = -100% … +100%

Actual Value Mapping

See the user's manual supplied with the FBA module.

Generic Profile Technical Data

Overview

The generic profile aims to fulfill the industry-standard drive profile for each protocol (e.g. PROFIdrive for PROFIBUS, AC/DC Drive for DeviceNet).

Control Word

As described earlier in "Control Interface" the CONTROL WORD is the principal means for controlling the drive from a fieldbus system. For specific CONTROL WORD content, see the user's manual provided with the FBA module.

Status Word

As described earlier in "Control Interface", the contents of the STATUS WORD is status information, sent by the drive to the master station. For specific STATUS WORD content, see the user's manual provided with the FBA module.

Reference

As described earlier in "Control Interface", the REFERENCE word is a speed or frequency reference.

Note! REF2 is not supported by the Generic Drive profiles.

Reference Scaling

REFERENCE scaling is fieldbus type specific. However, at the drive, the meaning of a 100% REFERENCE value is fixed as described in the table below. For a detailed description on the range and scaling of the REFERENCE, see the user's manual supplied with the FBA module.

Generic Profile				
Reference	**Range**	**Reference Type**	**Scaling**	**Remarks**
REF	Fieldbus specific	Speed	-100% = -**(par. 9908)** 0 = 0 +100 = **(par. 9908)**	Final reference limited by 1104/1105. Actual motor speed limited by 2001/2002 (speed).
		Frequency	-100% = -**(par. 9907)** 0 = 0 +100 = **(par. 9907)**	Final reference limited by 1104/1105. Actual motor speed limited by 2007/2008 (frequency).

Actual Values

As described earlier in "Control Interface", Actual Values are words containing drive values.

Actual Value Scaling

For Actual Values, scale the feedback integer using the parameter's resolution. (See "Parameter Descriptions" section for parameter resolutions.) For example:

Feedback Integer	Parameter Resolution	(Feedback Integer) * (Parameter Resolution) = Scaled Value
1	0.1 mA	1 * 0.1 mA = 0.1 mA
10	0.1%	10 * 0.1% = 1%

Where parameters are in percent, the "Parameter Descriptions" section specifies what parameter corresponds to 100%. In such cases, to convert from percent to engineering units, multiply by the value of the parameter that defines 100% and divide by 100%. For example:

Feedback Integer	Parameter Resolution	Value of the Parameter that defines 100%	(Feedback Integer) * (Parameter Resolution) * (Value of 100% Ref.) / 100% = Scaled Value
10	0.1%	1500 rpm[1]	10 * 0.1% * 1500 RPM / 100% = 15 rpm
100	0.1%	500 Hz[2]	100 * 0.1% * 500 Hz / 100% = 50 Hz

1. Assuming, for the sake of this example, that the Actual Value uses parameter 9908 MOT NOM SPEED as the 100% reference, and that 9908 = 1500 rpm.
2. Assuming, for the sake of this example, that the Actual Value uses parameter 9907 MOT NOM FREQ as the 100% reference, and that 9907 = 500 Hz.

Actual Value Mapping

See the user's manual supplied with the FBA module.

Diagnostics

Warning! Do not attempt any measurement, parts replacement or other service procedure not described in this manual. Such action will void the warranty, may endanger correct operation, and increase downtime and expense.

Warning! All electrical installation and maintenance work described in this chapter should only be undertaken by qualified service personnel. The Safety instructions on the first pages of this manual must be followed.

Diagnostic Displays

The drive detects error situations and reports them using:

- The green and red LED on the body of the drive
- The status LED on the control panel (if the HVAC control panel is attached to the drive)
- The control panel display (if the HVAC control panel is attached to the drive)
- The Fault Word and Alarm Word parameter bits (parameters 0305 to 0309). See "Group 03: Actual Signals" on page 65.

The form of the display depends on the severity of the error. You can specify the severity for many errors by directing the drive to:

- Ignore the error situation.
- Report the situation as an alarm.
- Report the situation as a fault.

Red – Faults

The drive signals that it has detected a severe error, or fault, by:

- Enabling the red LED on the drive (LED is either steady on or blinking).
- Setting an appropriate bit in a Fault Word parameter (0305 to 0307).
- Overriding the control panel display with the display of a fault code.
- Stopping the motor (if it was on).

The fault code on the control panel display is temporary. Pressing any of the following buttons removes the fault message: MENU, ENTER, UP button or DOWN button. The message reappears after a few seconds if the control panel is not touched and the fault is still active.

Flashing Green – Alarms

For less severe errors, called alarms, the diagnostic display is advisory. For these situations, the drive is simply reporting that it had detected something "unusual." In these situations, the drive:

- Flashes the green LED on the drive (does not apply to alarms that arise from control panel operation errors).
- Sets an appropriate bit in an Alarm Word parameter (0308 or 0309). See "Group 03: Actual Signals" on page 65 for the bit definitions.
- Overrides the control panel display with the display of an alarm code and/or name.

Alarm messages disappear from the control panel display after a few seconds. The message returns periodically as long as the alarm condition exists.

Correcting Faults

The recommended corrective action for faults is:

- Use the "Fault Listing" table below to find and address the root cause of the problem.
- Reset the drive. See "Fault Resetting" on page 245.

Fault Listing

Fault Code	Fault Name In Panel	Description and Recommended Corrective Action
1	OVERCURRENT	Output current is excessive. Check for and correct: • Excessive motor load. • Insufficient acceleration time (parameters 2202 ACCELER TIME 1 and 2205 ACCELER TIME 2). • Faulty motor, motor cables or connections.
2	DC OVERVOLT	Intermediate circuit DC voltage is excessive. Check for and correct: • Static or transient overvoltages in the input power supply. • Insufficient deceleration time (parameters 2203 DECELER TIME 1 and 2206 DECELER TIME 2). • Verify that overvoltage controller is ON (using parameter 2005).
3	DEV OVERTEMP	Drive heatsink is overheated. Temperature is at or above limit. R1…R4 & R7/R8: 115 °C (239 °F) R5/R6: 125 °C (257 °F) Check for and correct: • Fan failure. • Obstructions in the air flow. • Dirt or dust coating on the heat sink. • Excessive ambient temperature. • Excessive motor load.
4	SHORT CIRC	Fault current. Check for and correct: • A short-circuit in the motor cable(s) or motor. • Supply disturbances.

Fault Code	Fault Name In Panel	Description and Recommended Corrective Action
5	RESERVED	Not used.
6	DC UNDERVOLT	Intermediate circuit DC voltage is not sufficient. Check for and correct: • Missing phase in the input power supply. • Blown fuse. • Undervoltage on mains.
7	AI1 LOSS	Analog input 1 loss. Analog input value is less than AI1FLT LIMIT (3021). Check for and correct: • Source and connection for analog input. • Parameter settings for AI1FLT LIMIT (3021) and 3001 AI<MIN FUNCTION.
8	AI2 LOSS	Analog input 2 loss. Analog input value is less than AI2FLT LIMIT (3022). Check for and correct: • Source and connection for analog input. • Parameter settings for AI2FLT LIMIT (3022) and 3001 AI<MIN FUNCTION.
9	MOT TEMP	Motor is too hot, based on either the drive's estimate or on temperature feedback. • Check for overloaded motor. • Adjust the parameters used for the estimate (3005…3009). • Check the temperature sensors and Group 35 parameters.
10	PANEL LOSS	Panel communication is lost and either: • Drive is in local control mode (the control panel displays HAND), or • Drive is in remote control mode (REM) and is parameterized to accept start/stop, direction or reference from the control panel. To correct check: • Communication lines and connections • Parameter 3002 PANEL COMM ERROR. • Parameters in Group 10: Command Inputs and Group 11: Reference Select (if drive operation is REM).
11	ID RUN FAIL	The motor ID run was not completed successfully. Check for and correct: • Motor connections • Motor parameters 9905…9909
12	MOTOR STALL	Motor or process stall. Motor is operating in the stall region. Check for and correct: • Excessive load. • Insufficient motor power. • Parameters 3010…3012.
14	EXTERNAL FLT 1	Digital input defined to report first external fault is active. See parameter 3003 EXTERNAL FAULT 1.
15	EXTERNAL FLT 2	Digital input defined to report second external fault is active. See parameter 3004 EXTERNAL FAULT 2.

Fault Code	Fault Name In Panel	Description and Recommended Corrective Action
16	EARTH FAULT	Possible ground fault detected in the motor or motor cables. The drive monitors for ground faults while the drive is running and while the drive is not running. Detection is more sensitive when the drive is not running and can produce false positives. Possible corrections: • Check for/correct faults in the input wiring. • Verify that motor cable does not exceed maximum specified length. • A delta grounded input power supply and motor cables with high capacitance may result in erroneous error reports during non-running tests. To disable response to fault monitoring when the drive is not running, use parameter 3023 WIRING FAULT. To disable response to all ground fault monitoring, use parameter 3017 EARTH FAULT.
17	UNDERLOAD	Motor load is lower than expected. Check for and correct: • Disconnected load. • Parameters 3013 UNDERLOAD FUNCTION…3015 UNDERLOAD CURVE.
18	THERM FAIL	Internal fault. The thermistor measuring the internal temperature of the drive is open or shorted. Contact your local ABB sales representative.
19	OPEX LINK	Internal fault. A communication-related problem has been detected on the fiber optic link between the OITF and OINT boards. Contact your local ABB sales representative.
20	OPEX PWR	Internal fault. Low voltage condition detected on OINT power supply. Contact your local ABB sales representative.
21	CURR MEAS	Internal fault. Current measurement is out of range. Contact your local ABB sales representative.
22	SUPPLY PHASE	Ripple voltage in the DC link is too high. Check for and correct: • Missing mains phase. • Blown fuse.
23	ENCODER ERR	Not used (Available only with encoder and parameter group 50).
23	ENCODER ERR	The drive is not detecting a valid encoder signal. Check for and correct: • Encoder presence and proper connection (reverse wired, loose connection, or short circuit). • Voltage logic levels are outside of the specified range. • A working and properly connected Pulse Encoder Interface Module, OTAC-01. • Wrong value entered in parameter 5001 PULSE NR. A wrong value will only be detected if the error is such that the calculated slip is greater than 4 times the rated slip of the motor. • Encoder is not being used, but parameter 5002 ENCODER ENABLE = 1 (ENABLED).
24	OVERSPEED	Motor speed is greater than 120% of the larger (in magnitude) of 2001 MINIMUM SPEED or 2002 MAXIMUM SPEED. Check for and correct: • Parameter settings for 2001 and 2002. • Adequacy of motor braking torque. • Applicability of torque control. • Brake chopper and resistor.
25	RESERVED	Not used as of the publication of this manual.
26	DRIVE ID	Internal fault. Configuration Block Drive ID is not valid. Contact your local ABB sales representative.

Fault Code	Fault Name In Panel	Description and Recommended Corrective Action
27	CONFIG FILE	Internal configuration file has an error. Contact your local ABB sales representative.
28	SERIAL 1 ERR	Fieldbus communication has timed out. Check for and correct: • Fault setup (3018 COMM FAULT FUNC and 3019 COMM FAULT TIME). • Communication settings (Group 51 or 53 as appropriate). • Poor connections and/or noise on line.
29	EFB CONFIG FILE	Error in reading the configuration file for the embedded fieldbus.
30	FORCE TRIP	Fault trip forced by the fieldbus. See the fieldbus User's Manual.
31	EFB 1	Fault code reserved for the embedded fieldbus (EFB) protocol application. These codes are not used as of the publication of this manual.
32	EFB 2	
33	EFB 3	
34	MOTOR PHASE	Fault in the motor circuit. One of the motor phases is lost. Check for and correct: • Motor fault. • Motor cable fault. • Thermal relay fault (if used). • Internal fault.
35	OUTPUT WIRING	Possible power wiring error detected. When the drive is not running it monitors for an improper connection between the drive input power and the drive output. Check for and correct: • Proper input wiring – line voltageis NOT connected to drive output. • The fault can be erroneously declared if the input power is a delta grounded system and motor cable capacitance is large. This fault can be disabled using parameter 3023 WIRING FAULT.
36	INCOMP SWTYPE	The drive cannot use the software. • Internal Fault. • The loaded software is not compatible with the drive. • Call support representative.
101	SERF CORRUPT	Error internal to the drive. Contact your local ABB sales representative and report the error number.
102	RESERVED	
103	SERF MACRO	
104	RESERVED	
105	RESERVED	

Fault Code	Fault Name In Panel	Description and Recommended Corrective Action
201	DSP T1 OVERLOAD	Error in the system. Contact your local ABB sales representative and report the error number.
202	DSP T2 OVERLOAD	
203	DSP T3 OVERLOAD	
204	DSP STACK ERROR	
205	RESERVED (obsolete)	
206	OMIO ID ERROR	
207	EFB LOAD ERR	
1000	PAR HZRPM LIMITS	Parameter values are inconsistent. Check for any of the following: • 2001 MINIMUM SPEED > 2002 MAXIMUM SPEED. • 2007 MINIMUM FREQ > 2008 MAXIMUM FREQ. • 2001 MINIMUM SPEED / 9908 MOTOR NOM SPEED is outside proper range (> 50) • 2002 MAXIMUM SPEED / 9908 MOTOR NOM SPEED is outside proper range (> 50) • 2007 MINIMUM FREQ / 9907 MOTOR NOM FREQ is outside proper range (> 50) • 2008 MAXIMUM FREQ / 9907 MOTOR NOM FREQ is outside proper range (> 50)
1001	PAR PFAREFNG	Parameter values are inconsistent. Check for the following: • 2007 MINIMUM FREQ is negative, when 8123 PFA ENABLE is active.
1002	RESERVED (Obsolete)	
1003	PAR AI SCALE	Parameter values are inconsistent. Check for any of the following: • 1301 AI 1 MIN > 1302 AI 1 MAX. • 1304 AI 2 MIN > 1305 AI 2 MAX.
1004	PAR AO SCALE	Parameter values are inconsistent. Check for any of the following: • 1504 AO 1 MIN > 1505 AO 1 MAX. • 1510 AO 2 MIN > 1511 AO 2 MAX.
1005	PAR PCU 2	Parameter values for power control are inconsistent: Improper motor nominal kVA or motor nominal power. Check for the following: • 1.1 ≤ (9906 MOTOR NOM CURR * 9905 MOTOR NOM VOLT * 1.73 / P_N) ≤ 3.0 • Where: P_N = 1000 * 9909 MOTOR NOM POWER (if units are kW) or P_N = 746 * 9909 MOTOR NOM POWER (if units are HP, e.g. in US)
1006	EXT ROMISSING	Parameter values are inconsistent. Check for the following: • Extension relay module not connected and • 1410…1412 RELAY OUTPUTS 4…6 have non-zero values.
1007	PAR FBUSMISSING	Parameter values are inconsistent. Check for and correct: • A parameter is set for fieldbus control (e.g. 1001 EXT1 COMMANDS = 10 (COMM)), but 9802 COMM PROT SEL = 0.
1008	PAR PFAWOSCALAR	Parameter values are inconsistent – 9904 MOTOR CTRL MODE must be = 3 (SCALAR: SPEED), when 8123 PFA ENABLE is activated.

Fault Code	Fault Name In Panel	Description and Recommended Corrective Action
1009	PAR PCU1	Parameter values for power control are inconsistent: Improper motor nominal frequency or speed. Check for both of the following: • 1 ≤ (60 * 9907 MOTOR NOM FREQ / 9908 MOTOR NOM SPEED ≤ 16 • 0.8 ≤ 9908 MOTOR NOM SPEED / (120 * 9907 MOTOR NOM FREQ / Motor Poles) ≤ 0.992
1010	PAR PFA OVERRIDE	Both the override mode and PFA are activated at the same time. These modes are mutually incompatible, because PFA interlocks cannot be observed in the override mode.
1011	PAR OVERRIDE PARS	Overeride is enabled, but parameters are incompatible. Verify that1701 is not zero, and (depending on 9904 value) 1702 or 1703 is not zero.
1012	PAR PFC IO 1	IO configuration is not complete – not enough relays are parameterized to PFC. Or, a conflict exists between Group 14, parameter 8117, NR OF AUX MOT, and parameter 8118, AUTOCHNG INTERV.
1013	PAR PFC IO 2	IO configuration is not complete – the actual number of PFC motors (parameter 8127, MOTORS) does not match the PFC motors in Group 14 and parameter 8118 AUTOCHNG INTERV.
1014	PAR PFC IO 3	IO configuration is not complete – the drive is unable to allocate a digital input (interlock) for each PFC motor (parameters 8120 INTERLOCKS and 8127 MOTORS).

Fault Resetting

The ACH550 can be configured to automatically reset certain faults. Refer to parameter Group 31: Automatic Reset.

Warning! If an external source for start command is selected and it is active, the ACH550 may start immediately after fault reset.

Flashing Red LED

To reset the drive for faults indicated by a flashing red LED:

- Turn off the power for 5 minutes.

Red LED

To reset the drive for faults indicated by a red LED (on, not flashing), correct the problem and do one of the following:

- From the control panel, press RESET
- Turn off the power for 5 minutes.

Depending on the value of 1604, FAULT RESET SELECT, the following could also be used to reset the drive:

- Digital input
- Serial communication

When the fault has been corrected, the motor can be started.

History

For reference, the last three fault codes are stored into parameters 0401, 0412, 0413. For the most recent fault (identified by parameter 0401), the drive stores additional data (in parameters 0402…0411) to aid in troubleshooting a problem. For example, parameter 0404 stores the motor speed at the time of the fault.

To clear the fault history (all of the Group 04, Fault History parameters):

1. Using the control panel in Parameters mode, select parameter 0401.
2. Press EDIT.
3. Press UP and Down simultaneously.
4. Press SAVE.

Correcting Alarms

The recommended corrective action for alarms is:

- Determine if the Alarm requires any corrective action (action is not always required).
- Use "Alarm Listing" below to find and address the root cause of the problem.

Alarm Listing

The following table lists the alarms by code number and describes each.

Alarm Code	Display	Description
2001	OVERCURRENT	Current limiting controller is active. Check for and correct: • Excessive motor load. • Insufficient acceleration time (parameters 2202 ACCELER TIME 1 and 2205 ACCELER TIME 2). • Faulty motor, motor cables or connections.
2002	OVERVOLTAGE	Over voltage controller is active. Check for and correct: • Static or transient overvoltages in the input power supply. • Insufficient deceleration time (parameters 2203 DECELER TIME 1 and 2206 DECELER TIME 2).
2003	UNDERVOLTAGE	Under voltage controller is active. Check for and correct: • Undervoltage on mains.
2004	DIR LOCK	The change in direction being attempted is not allowed. Either: • Do not attempt to change the direction of motor rotation, or • Change parameter 1003 DIRECTION to allow direction change (if reverse operation is safe).
2005	I/O COMM	Fieldbus communication has timed out. Check for and correct: • Fault setup (3018 COMM FAULT FUNC and 3019 COMM FAULT TIME). • Communication settings (Group 51 or 53 as appropriate). • Poor connections and/or noise on line.

Alarm Code	Display	Description
2006	AI1 LOSS	Analog input 1 is lost, or value is less than the minimum setting. Check: • Input source and connections • Parameter that sets the minimum (3021) • Parameter that sets the Alarm/Fault operation (3001)
2007	AI2 LOSS	Analog input 2 is lost, or value is less than the minimum setting. Check: • Input source and connections • Parameter that sets the minimum (3022) • Parameter that sets the Alarm/Fault operation (3001)
2008	PANEL LOSS	Panel communication is lost and either: • Drive is in local control mode (the control panel displays LOC), or • Drive is in remote control mode (REM) and is parameterized to accept start/stop, direction or reference from the control panel. To correct check: • Communication lines and connections • Parameter 3002 PANEL LOSS. • Parameters in groups 10 COMMAND INPUTS and 11 REFERENCE SELECT (if drive operation is REM).
2009	DEVICE OVERTEMP	Drive heatsink is hot. This alarm warns that a DEVICE OVERTEMP fault may be near. R1…R4 & R7/R8: 100 °C (212 °F) R5/R6: 110 °C (230 °F) Check for and correct: • Fan failure. • Obstructions in the air flow. • Dirt or dust coating on the heat sink. • Excessive ambient temperature. • Excessive motor load.
2010	MOT OVERTEMP	Motor is hot, based on either the drive's estimate or on temperature feedback. This alarm warns that a Motor Underload fault trip may be near. Check: • Check for overloaded motor. • Adjust the parameters used for the estimate (3005…3009). • Check the temperature sensors and Group 35 parameters.
2011	UNDERLOAD	Motor load is lower than expected. This alarm warns that a Motor Underload fault trip may be near. Check: • Motor and drive ratings match (motor is NOT undersized for the drive) • Settings on parameters 3013 to 3015
2012	MOTOR STALL	Motor is operating in the stall region. This alarm warns that a Motor Stall fault trip may be near.
2013 (note 1)	AUTORESET	This alarm warns that the drive is about to perform an automatic fault reset, which may start the motor. • To control automatic reset, use parameter group 31 AUTOMATIC RESET.
2014 (note 1)	AUTOCHANGE	This alarm warns that the PFA autochange function is active. • To control PFA, use parameter group 81 PFA CONTROL

Alarm Code	Display	Description
2015	PFA INTERLOCK	This alarm warns that the PFA interlocks are active, which means that the drive cannot start the following: • Any motor (when Autochange is used), • The speed regulated motor (when Autochange is not used).
2016	Reserved	
2017	OFF BUTTON	Note 1.
2018 (note 1)	PID SLEEP	This alarm warns that the PID sleep function is active, which means that the motor could accelerate when the PID sleep function ends. • To control PID sleep, use parameters 4022…4026 or 4122…4126.
2019	ID RUN	Performing ID run.
2020	RESERVED	
2021	START ENABLE 1 MISSING	This alarm warns that the Start Enable 1 signal is missing. • To control Start Enable 1 function, use parameter 1608. To correct, check: • Digital input configuration. • Communication settings.
2022	START ENABLE 2 MISSING	This alarm warns that the Start Enable 2 signal is missing. • To control Start Enable 2 function, use parameter 1609. To correct, check: • Digital input configuration. • Communication settings.
2023	EMERGENCY STOP	Emergency stop activated.
2024	ENCODER ERROR	The drive is not detecting a valid encoder signal. Check for and correct: • Encoder presence and proper connection (reverse wired, loose connection, or short circuit). • Voltage logic levels are outside of the specified range. • A working and properly connected Pulse Encoder Interface Module, OTAC-01. • Wrong value entered in parameter 5001 PULSE NR. A wrong value will only be detected if the error is such that the calculated slip is greater than 4 times the rated slip of the motor. • Encoder is not being used, but parameter 5002 ENCODER ENABLE = 1 (ENABLED).
2025	FIRST START	Signals that a the drive is performing a First Start evaluation of motor characteristics. This is normal the first time the motor is run after motor parameters are entered or changed. See parameter 9910 (MOTOR ID RUN) for a description of motor models.

Note 1. Even when the relay output is configured to indicate alarm conditions (e.g. parameter 1401 RELAY OUTPUT 1 = 5 (ALARM) or 16 (FLT/ALARM)), this alarm is not indicated by a relay output.

Maintenance

Warning! Read "Safety" on page 3 before performing any maintenance on the equipment. Ignoring the safety instructions can cause injury or death.

Maintenance Intervals

If installed in an appropriate environment, the drive requires very little maintenance. This table lists the routine maintenance intervals recommended by ABB.

Maintenance	Interval	Instruction
Heatsink temperature check and cleaning	Depends on the dustiness of the environment (every 6…12 months)	See "Heatsink" on page 249.
Main cooling fan replacement	Every five years	See "Main Fan Replacement" on page 250.
Internal enclosure cooling fan replacement (IP 54/UL Type 12 units)	Every three years.	See "Internal Enclosure Fan Replacement" on 251.
Capacitor change (Frame sizes R5 and R6)	Every ten years	See "Capacitors" on page 251.
Replace battery in the Assistant control panel	Every ten years	See "Battery" on page 252.

Heatsink

The heatsink fins accumulate dust from the cooling air. Since a dusty heatsink is less efficient at cooling the drive, overtemperature faults become more likely. In a "normal" environment (not dusty, not clean) check the heatsink annually, in a dusty environment check more often.

Clean the heatsink as follows (when necessary):

1. Remove power from drive.
2. Remove the cooling fan (see section "Main Fan Replacement" on page 250).
3. Blow clean compressed air (not humid) from bottom to top and simultaneously use a vacuum cleaner at the air outlet to trap the dust.

Note: If there is a risk of the dust entering adjoining equipment, perform the cleaning in another room.

4. Replace the cooling fan.
5. Restore power.

Main Fan Replacement

The drive's main cooling fan has a life span of about 60,000 operating hours at maximum rated operating temperature and drive load. The expected life span doubles for each 10 °C (18 °F) drop in the fan temperature (fan temperature is a function of ambient temperatures and drive loads).

Fan failure can be predicted by the increasing noise from fan bearings and the gradual rise in the heatsink temperature in spite of heatsink cleaning. If the drive is operated in a critical part of a process, fan replacement is recommended once these symptoms start appearing. Replacement fans are available from ABB. Do not use other than ABB specified spare parts.

Frame Sizes R1...R4

To replace the fan:

1. Remove power from drive.
2. Remove drive cover.
3. For Frame Size:
   - R1, R2: Press together the retaining clips on the fan cover sides, and lift.
   - R3, R4: Press in on the lever located on the left side of the fan mount, and rotate the fan up and out.
4. Disconnect the fan cable.
5. Install the fan in reverse order.
6. Restore power.

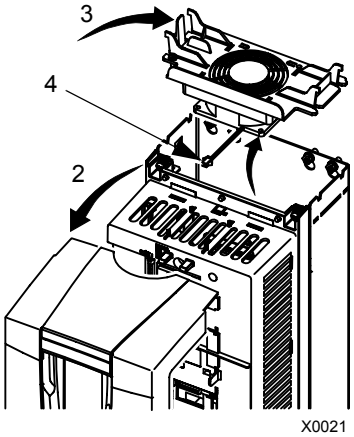

Frame Sizes R5 and R6

To replace the fan:

1. Remove power from drive.
2. Remove the screws attaching the fan.
3. Remove the fan:
   - R5: Swing the fan out on its hinges.
   - R6: Pull the fan out.
4. Disconnect the fan cable.
5. Install the fan in reverse order.
6. Restore power.

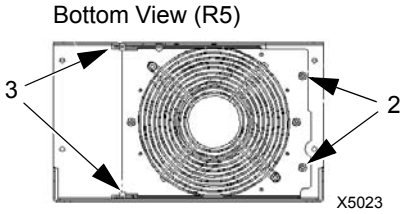

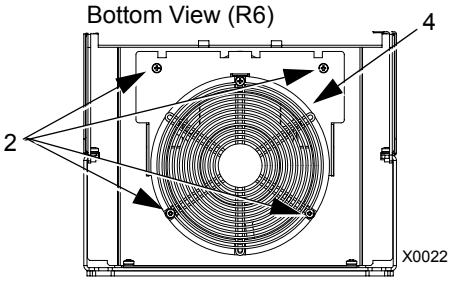

Frame Sizes R7 and R8

Refer to the installation instructions supplied with the fan kit.

Internal Enclosure Fan Replacement

IP 54 / UL Type 12 enclosures have an additional internal fan to circulate air inside the enclosure.

Frame Sizes R1 to R4

To replace the internal enclosure fan in frame sizes R1 to R4:

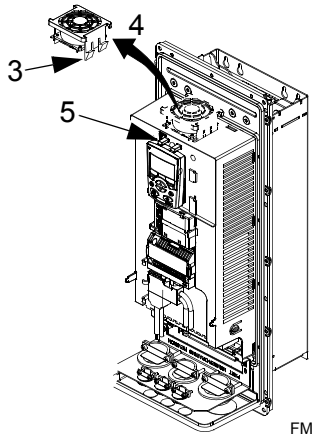

1. Remove power from drive.
2. Remove the front cover.
3. The housing that holds the fan in place has barbed retaining clips at each corner. Press all four clips toward the center to release the barbs.
4. When the clips/barbs are free, pull the housing up to remove from the drive.
5. Disconnect the fan cable.
6. Install the fan in reverse order, noting that:
   - The fan air flow is up (refer to arrow on fan).
   - The fan wire harness is toward the front.
   - The notched housing barb is located in the right-rear corner.
   - The fan cable connects just forward of the fan at the top of the drive.

Frame Sizes R5 and R6

To replace the internal enclosure fan in frame sizes R5 or R6:

- Remove power from drive.
- Remove the front cover.
- Lift the fan out and disconnect the cable.
- Install the fan in reverse order.
- Restore power.

Capacitors

The drive intermediate circuit employs several electrolytic capacitors. Their life span is from 35,000...90,000 hours depending on drive loading and ambient temperature. Capacitor life can be prolonged by lowering the ambient temperature.

It is not possible to predict a capacitor failure. Capacitor failure is usually followed by a input power fuse failure or a fault trip. Contact ABB if capacitor failure is suspected. Replacements for frame size R5 and R6 are available from ABB. Do not use other than ABB specified spare parts.

Control Panel

Cleaning

Use a soft damp cloth to clean the control panel. Avoid harsh cleaners which could scratch the display window.

Battery

A battery is only used in Assistant control panels that have the clock function available and enabled. The battery keeps the clock operating in memory during power interruptions.

The expected life for the battery is greater than ten years. To remove the battery, use a coin to rotate the battery holder on the back of the control panel. Replace the battery with type CR2032.

Note! The battery is NOT required for any control panel or drive function, except the clock.

Technical Data

Ratings

By type code, the table below provides ratings for the ACH550 adjustable speed AC drive, including:

- IEC ratings
- NEMA ratings (shaded columns)
- Frame size

Ratings, 208…240 Volt Drives

Abbreviated column headers are described in "Symbols" on page 255.

Type Code	Valid up to 40°C (104 °F)		Frame Size
ACH550-xx-see below	I_{2N} A	P_N HP	
Three-phase supply voltage, **208…240 V**			
-04A6-2	4.6	1.0	R1
-06A6-2	6.6	1.5	R1
-07A5-2	7.5	2.0	R1
-012A-2	11.8	3.0	R1
-017A-2	16.7	5.0	R1
-024A-2	24.2	7.5	R2
-031A-2	30.8	10.0	R2
-046A-2	46.2	15.0	R3
-059A-2	59.4	20.0	R3
-075A-2	74.8	25.0	R4
-088A-2	88.0	30.0	R4
-114A-2	114	40.0	R4
-143A-2	143	50.0	R6
-178A-2	178	60.0	R6
-221A-2	221	75.0	R6
-248A-2	248	100	R6

Ratings, 380…480 Volt Drives

Abbreviated column headers are described in "Symbols" on page 255.

Type Code	Valid up to 40°C (104 °F)		Frame Size
ACH550-xx-see below	I_{2N} A	P_N HP	
Three-phase supply voltage, **380**…**480 V**			
-03A3-4	3.3	1.5	R1
-04A1-4	4.1	2	R1
-06A9-4	6.9	3	R1
-08A8-4	8.8	5	R1
-012A-4	11.9	7.5	R1
-015A-4	15.4	10	R2
-023A-4	23	15	R2
-031A-4	31	20	R3
-038A-4	38	25	R3
-044A-4	44	30	R4
-059A-4	59	40	R4
-072A-4	72	50	R4
-078A-4 (Note 1)	77	60	R4
-077A-4 (Note 1)	77	60	R5
-096A-4	96	75	R5
-124A-4	124	100	R6
-157A-4	157	125	R6
-180A-4	180	150	R6
-245A-4	245	200	R7
-316A-4	316	250	R8
-368A-4	368	300	R8
-414A-4	414	350	R8
-486A-4	486	400	R8
-526A-4	526	450	R8
-602A-4	602	500	R8
-645A-4	645	550	R8

1. The ACH550-xx-078A-4 (an R4 frame size) replaces the ACH550-xx-077A-4.

Ratings, 500…600 Volt Drives

Abbreviated column headers are described in "Symbols" on page 255.

Type Code	Normal Use		Frame Size
ACH550-xx- see below	I_{2N} A	P_N HP	
Three-phase supply voltage, **500**…**600 V**			
-02A7-6	2.7	2	R2
-03A9-6	3.9	3	R2
-06A1-6	6.1	5	R2
-09A0-6	9	7.5	R2
-011A-6	11	10	R2
-017A-6	17	15	R2
-022A-6	22	20	R3
-027A-6	27	25	R3
-032A-6	32	30	R4
-041A-6	41	40	R4
-052A-6	52	50	R4
-062A-6	62	60	R4
-077A-6	77	75	R6
-099A-6	99	100	R6
-125A-6	125	125	R6
-144A-6	144	150	R6

Symbols

Typical ratings:
Normal use (10% overload capability)

I_{2N} continuous rms current. 10% overload is allowed for one minute in ten minutes.

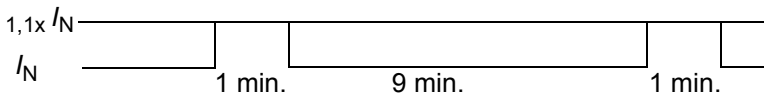

P_N typical motor power in normal use. The kilowatt power ratings apply to most IEC, 4-pole motors. The Horsepower ratings apply to most 4-pole NEMA motors.

Sizing

The current ratings are the same regardless of the supply voltage within one voltage range. To achieve the rated motor power given in the table, the rated current of the drive must be higher than or equal to the rated motor current.

Note 1: The ratings apply in ambient temperature of 40 °C (104 °F).

Derating

The load capacity (current and power) decreases for certain situations, as defined below. In such situations, where full motor power is required, oversize the drive so that the derated value provides sufficient capacity.

For example, if your application requires 15.4 A of motor current and a 8 kHz switching frequency, calculate the appropriate drive size requirement as follows:

The minimum size required = 15.4 A / 0.80 = 19.25 A

Where: 0.80 is the derating for 8 kHz switching frequency (see "Switching Frequency Derating" below).

Referring to I_{2N} in the ratings tables (page 253), the following drives exceed the I_{2N} requirement of 19.25 A: ACH550-UH-023A-4, or ACH550-UH-024A-2

Temperature Derating

In the temperature range +40 °C...50 °C (+104 °F...122 °F) the rated output current is decreased 1% for every 1 °C (1.8 °F) above +40 °C (+104 °F). Calculate the output current by multiplying the current given in the rating table by the derating factor.

Example If the ambient temperature is 50 °C (+122 °F) the derating factor is 100% - 1%/°C x 10 °C = 90% or 0.90.
The output current is then 0.90 x I_{2N}.

Altitude Derating

In altitudes from 1000...4000 m (3300...13,200 ft) above sea level, the derating is 1% for every 100 m (330 ft). If the installation site is higher than 2000 m (6600 ft) above sea level, please contact your local ABB distributor or office for further information.

Single Phase Supply Derating

For 208…240 Volt series drives, a single phase supply can be used. In that case, the derating is 50%.

Switching Frequency Derating

When using the 8 kHz switching frequency (parameter 2606) is used, either:

- Derate P_N and I_{2N} to 80% or
- Set parameter 2607 SW FREQ CTRL = 1 (ON) which allows the drive to reduce the switching frequency if/when the drive's internal temperature exceeds 90 °C. See the parameter description for 2607 for details.

When using the 12 kHz switching frequency (parameter 2606) is used, either:

- Derate:
  - P_N and I_{2N} to 65% (to 50% for 600 V R4 frame sizes, that is for ACH550-xx-032A-6…ACH550-xx-062A-6), and
  - Ambient temperature maximum to 30 °C (86 °F), or
- Set parameter 2607 SW FREQ CTRL = 1 (ON) which allows the drive to reduce the switching frequency if/when the drive's internal temperature exceeds 80 °C. See the parameter description for 2607 for details.

Input Power Connections

Warning! Do not operate the drive outside the nominal input line voltage range. Over-voltage can result in permanent damage to the drive.

Input Power Specifications

Input Power Connection Specifications	
Voltage (U_1)	208/220/230/240 VAC 3-phase (or 1-phase) -15%…+10% for **ACH550-xx-**xxxx-2 units. 400/415/440/460/480 VAC 3-phase -15%…+10% for **ACH550-xx-**xxxx-4 units. 500/525/575/600 VAC 3-phase -15%…+10% for **ACH550-xx-**xxxx-6 units.
Prospective short-circuit current (IEC 629)	Maximum allowed prospective short-circuit current in the supply is 100 kA in a second providing that the drive's input power is protected with appropriate fuses. US: 100,000 AIC.
Frequency	48…63 Hz
Imbalance	Max. ± 3% of nominal phase to phase input voltage
Fundamental power factor (cos φ)	0.98 (at nominal load)
Cable Temperature Rating	90 °C (194 °F) rating minimum.

Branch Circuit Protection

The ACH550 does not include a disconnect device. A means to disconnect input power must be installed between the AC power source and the ACH550. This branch circuit protection must:

- Be sized to conform to applicable safety regulations, including, but not limited to, both National and local electrical codes.
- Be locked in the open position during installation and maintenance work.

The disconnect device must not be used to control the motor. Instead use the control panel, or commands to the I/O terminals for motor control.

Fuses

The following tables provide fuse recommendations for short circuit protection on the drive's input power. These recommendations are not requirements if branch circuit protection is otherwise provided per NEC. UL508A manufacturers are not required to use the recommended fuses for the purpose of UL listing a panel that includes the ACH550.

208…240 Volt, Fuses

ACH550-UH- see below	Input Current A	Input Fuses		
		IEC269 gG (A)	UL Class T (A)	Bussmann Type
-04A6-2	4.6	10	10	JJS-10
-06A6-2	6.6			
-07A5-2	7.5			
-012A-2	11.8	16	15	JJS-15
-017A-2	16.7	25	25	JJS-25
-024A-2	24.2		30	JJS-30
-031A-2	30.8	40	40	JJS-40
-046A-2	46.2	63	60	JJS-60
-059A-2	59.4		80	JJS-80
-075A-2	74.8	80	100	JJS-100
-088A-2	88.0	100	110	JJS-110
-114A-2	114	125	150	JJS-150
-143A-2	143	200	200	JJS-200
-178A-2	178	250	250	JJS-250
-221A-2	221	315	300	JJS-300
-248A-2	248		350	JJS-350

380…480 Volt, Fuses

ACH550-UH- see below	Input Current (A)	Input Fuses		
		IEC269 gG (A)	UL Class T (A)	Bussmann Type
-03A3-4	3.3	10	10	JJS-10
-04A1-4	4.1			
-06A9-4	6.9			
-08A8-4	8.8		15	JJS-15
-012A-4	11.9	16		
-015A-4	15.4		20	JJS-20
-023A-4	23	25	30	JJS-30
-031A-4	31	35	40	JJS-40
-038A-4	38	50	50	JJS-50
-044A-4	44		60	JJS-60
-059A-4	59	63	80	JJS-80
-072A-4	72	80	90	JJS-90
-077A-4	77		100	JJS-100
-078A-4	77	80	100	JJS-100
-096A-4	96	125	125	JJS-125
-124A-4	124	160	175	JJS-175
-157A-4	157	200	200	JJS-200

ACH550-UH-see below	Input Current (A)	Input Fuses		
		IEC269 gG (A)	UL Class T (A)	Bussmann Type
-180A-4	180	250	250	JJS-250
-245A-4	245	Does Not Apply	400	JJS-400
-316A-4	316		400	JJS-400
-368A-4	368		400	JJS-400
-414A-4	414		600	JJS-600
-486A-4	486		600	JJS-600
-526A-4	526		800	JJS-800
-602A-4	602		800	JJS-800
-645A-4	645		800	JJS-800

Fuses, 500…600 Volt, Fuses

ACH550-xx-see below	Input Current A	Mains Fuses		
		IEC269 gG (A)	UL Class T (A)	Bussmann Type
-02A7-6	2.7	10	10	JJS-10
-03A9-6	3.9			
-06A1-6	6.1			
-09A0-6	9	16	15	JJS-15
-011A-6	11			
-017A-6	17	25	25	JJS-25
-022A-6	22			
-027A-6	27	35	40	JJS-40
-032A-6	32			
-041A-6	41	50	50	JJS-50
-052A-6	52	60	60	JJS-60
-062A-6	62	80	80	JJS-80
-077A-6	77		100	JJS-100
-099A-6	99	125	150	JJS-150
-125A-6	125	160	175	JJS-175
-144A-6	144	200	200	JJS-200

Emergency Stop Devices

The overall design of the installation must include emergency stop devices and any other safety equipment that may be needed. Pressing STOP on the drive's control panel does NOT:

- Generate an emergency stop of the motor.
- Separate the drive from dangerous potential.

Input Power Cables/ Wiring

Input wiring can be either:

- A four conductor cable (three phases and ground/protective earth) routed through conduit.
- Four insulated conductors routed through conduit.

Size wiring according to local safety regulations, appropriate input voltage and the drive's load current. In any case, the conductor must be less than the maximum limit defined by the terminal size (see "Drive's Power Connection Terminals" on page 263).

The table below lists copper and aluminum cable types for different load currents. These recommendations apply only for the conditions listed at the top of the table.

IEC					NEC	
Based on: • EN 60204-1 and IEC 60364-5-2/2001 • PVC insulation • 30 °C (86 °F) ambient temperature • 70 °C (158 °F) surface temperature • Cables with concentric copper shield • Not more than nine cables laid on cable ladder side by side.					Based on: • NEC Table 310-16 for copper wires • 90 °C (194 °F) wire insulation • 40 °C (104 °F) ambient temperature • Not more than three current-carrying conductors in raceway or cable, or earth (directly buried). • Copper cables with concentric copper shield	
Max Load Current (A)	**Cu Cable (mm^2)**		**Max Load Current (A)**	**Al Cable (mm^2)**	**Max Load Current (A)**	**Cu Wire Size (AWG/kcmil)**
14	3x1.5		Do not use aluminum cable with frame sizes R1…R4		22.8	14
20	3x2.5				27.3	12
27	3x4				36.4	10
34	3x6				50.1	8
47	3x10				68.3	6
62	3x16				86.5	4
79	3x25				100	3
98	3x35		91	3x50	118	2
119	3x50		117	3x70	137	1
153	3x70		143	3x95	155	1/0
186	3x95		165	3x120	178	2/0
215	3x120		191	3x150	205	3/0
249	3x150		218	3x185	237	4/0
284	3x185		257	3x240	264	250 MCM or 2 x 1
			274	3x (3x50)	291	300 MCM or 2 x 1/0
			285	2x (3x95)	319	350 MCM or 2 x 2/0
					345	400 MCM or 2 x 2/0
					391	500 MCM or 2 x 3/0
					410	2 x 3/0

IEC					NEC	
Based on: • EN 60204-1 and IEC 60364-5-2/2001 • PVC insulation • 30 °C (86 °F) ambient temperature • 70 °C (158 °F) surface temperature • Cables with concentric copper shield • Not more than nine cables laid on cable ladder side by side.					Based on: • NEC Table 310-16 for copper wires • 90 °C (194 °F) wire insulation • 40 °C (104 °F) ambient temperature • Not more than three current-carrying conductors in raceway or cable, or earth (directly buried). • Copper cables with concentric copper shield	
Max Load Current (A)	**Cu Cable (mm^2)**		**Max Load Current (A)**	**Al Cable (mm^2)**	**Max Load Current (A)**	**Cu Wire Size (AWG/kcmil)**
					465	2x4/0
					474	2x250
					534	2x300
					615	2x350
					711	2x500

Ground Connections

For personnel safety, proper operation and to reduce electromagnetic emission/pick-up, the drive and the motor must be grounded at the installation site.

- Conductors must be adequately sized as required by safety regulations.
- Power cable shields must be connected to the drive PE terminal in order to meet safety regulations.
- Power cable shields are suitable for use as equipment grounding conductors only when the shield conductors are adequately sized as required by safety regulations.
- In multiple drive installations, do not connect drive terminals in series.

Unsymmetrically Grounded Networks

Warning! Do not attempt to install or remove EM1 or EM3 screws while power is applied to the drive's input terminals.

Unsymmetrically grounded networks are defined in the following table. In such networks, the internal connection provided by the EM3 screw (on frame sizes R1…R4 only) must be disconnected by removing EM3. If the grounding configuration of the network is unknown, remove EM3.

Note! ACH550-UH drives are shipped with the screw removed (but included in the conduit box).

Unsymmetrically Grounded Networks – EM3 Must Be Out				
Grounded at the corner of the delta	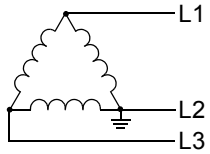		Grounded at the mid point of a delta leg	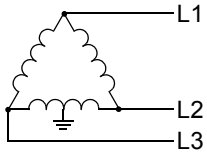
Single phase, grounded at an end point	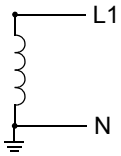		Three phase "Variac" without solidly grounded neutral	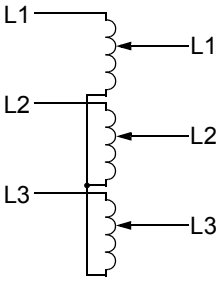

EM3 (an M4x16 screw) makes an internal ground connection that reduces electro-magnetic emission. Where EMC (electro-magnetic compatibility) is a concern, and the network is symmetrically grounded, EM3 may be installed. For reference, the diagram at right illustrates a symmetrically grounded network.

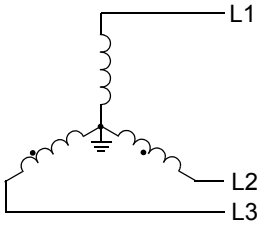

Floating Networks

Warning! Do not attempt to install or remove EM1, EM3, F1 or F2 screws while power is applied to the drive's input terminals.

For floating networks (also known as IT, ungrounded, or impedance/resistance grounded networks):

- Disconnect the ground connection to the internal RFI filters:
  - Frame sizes R1…R4: Remove the EM1 screw (unit is shipped with EM3 removed, see "Connection Diagrams" on page 16).
  - Frame sizes R5…R6: Remove both the F1 and F2 screws (see page 17).
- Where EMC requirements exist, check for excessive emission propagated to neighboring low voltage networks. In some cases, the natural suppression in transformers and cables is sufficient. If in doubt, use a supply transformer with static screening between the primary and secondary windings.
- Do NOT install an external RFI/EMC filter, such as one of the kits listed in "EN 61800-3 Compliant Motor Cables" on page 268. Using an RFI filter grounds the input power through the filter capacitors, which could be dangerous and could damage the unit.

Drive's Power Connection Terminals

The following table provides specifications for the drive's power connection terminals.

Frame Size	U1, V1, W1 U2, V2, W2 BRK±, UDC± Terminals						Earthing PE Terminal			
	Min. Wire Size		Max. Wire Size		Torque		Max. Wire Size		Torque	
	mm²	*AWG*	*mm²*	*AWG*	Nm	lb-ft	*mm²*	*AWG*	Nm	lb-ft
R1[Note 1]	0.75	18	16	6	1.3	1	16	6	1.3	1
R2[Note 1]	0.75	18	16	6	1.3	1	16	6	1.3	1
R3[Note 1]	2.5	14	25	3	2.7	2	25	3	2.7	2
R4[Note 1]	10	8	50	1/0	5.6	4	50	1/0	5.6	4
R5	16	6	70	2/0	15	11	70	2/0	15	11
R6	95[Note 2]	3/0	185	350 MCM	40	30	185	350 MCM	40	30
R7	16	6	185	350 MCM	40	30	Attach appropriate ring lugs to ground wires and mount with, up to five 13/32 bolts.			
R8	16	6	2x240	2x500 MCM	57	42				

1. Do not use aluminum cable with frame sizes R1…R4.
2. See the following section for smaller wire sizes on frame size R6.

Power Terminal Considerations – R6 Frame Size

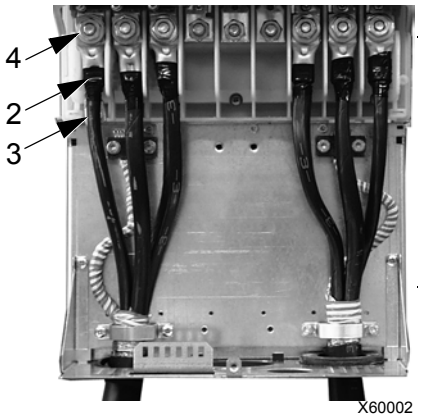

Warning! For R6 power terminals, if compression lugs are supplied, they can only be used for wire sizes that are 95 mm² (3/0 AWG) or larger. Smaller wires will loosen and may damage the drive, and require ring lugs as described below.

Ring Lugs

On the R6 frame size, if the cable size used is less than 95 mm² (3/0 AWG) or if no compression lugs are supplied, use ring lugs according to the following procedure.

1. Select appropriate ring lugs from the following table.
2. Attach the supplied terminal lugs to the drive end of the cables.
3. Isolate the ends of the ring lugs with insulating tape or shrink tubing.

4. Attach terminal lug to the drive.

Wire Size		Manufacturer	Ring Lug	Crimping Tool	No. of Crimps
mm^2	kcmil/ AWG				
16	6	Burndy	YAV6C-L2	MY29-3	1
		Ilsco	CCL-6-38	ILC-10	2
25	4	Burndy	YA4C-L4BOX	MY29-3	1
		Ilsco	CCL-4-38	MT-25	1
35	2	Burndy	YA2C-L4BOX	MY29-3	2
		Ilsco	CRC-2	IDT-12	1
		Ilsco	CCL-2-38	MT-25	1
50	1	Burndy	YA1C-L4BOX	MY29-3	2
		Ilsco	CRA-1-38	IDT-12	1
		Ilsco	CCL-1-38	MT-25	1
		Thomas & Betts	54148	TBM-8	3
55	1/0	Burndy	YA25-L4BOX	MY29-3	2
		Ilsco	CRB-0	IDT-12	1
		Ilsco	CCL-1/0-38	MT-25	1
		Thomas & Betts	54109	TBM-8	3
70	2/0	Burndy	YAL26T38	MY29-3	2
		Ilsco	CRA-2/0	IDT-12	1
		Ilsco	CCL-2/0-38	MT-25	1
		Thomas & Betts	54110	TBM-8	3
95	3/0	Burndy	YAL27T38	MY29-3	2
		Ilsco	CRA-3/0	IDT-12	1
		Ilsco	CCL-3/0-38	MT-25	1
		Thomas & Betts	54111	TBM-8	3
95	3/0	Burndy	YA28R4	MY29-3	2
		Ilsco	CRA-4/0	IDT-12	1
		Ilsco	CCL-4/0-38	MT-25	2
		Thomas & Betts	54112	TBM-8	4

Compression Lugs

Use the following procedure to attach cables if compression lugs are supplied and can be used.

1. Attach the supplied compression lugs to the drive end of the cables.
2. Attach compression lug to the drive.

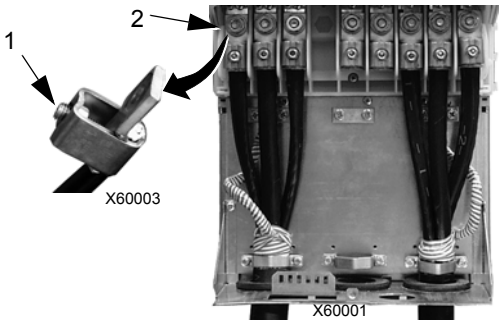

Motor Connections

Warning! Never connect line power to the drive output terminals: U2, V2 or W2. Line voltage applied to the output can result in permanent damage to the unit. If frequent bypassing is required, use mechanically interlocked switches or contactors.

Warning! Do not connect any motor with a nominal voltage less than one half of the drive's nominal input voltage.

Warning! Disconnect the drive before conducting any voltage tolerance (Hi-Pot) test or insulation resistance (Megger) test on the motor or motor cables. Do not conduct these tests on the drive.

Motor Connection Specifications

Motor Connection Specifications					
Voltage (U_2)	0…U_1, 3-phase symmetrical, U_{max} at the field weakening point				
Frequency	0…500 Hz				
Frequency Resolution	0.01 Hz				
Current	See "Ratings" on page 253.				
Field Weakening Point	10…500 Hz				
Switching Frequency	Selectable: 1, 4, 8, or 12 kHz (1, 4, or 8 kHz for 600 V, R6 frame size, that is for ACH550-xx-077A-6 … ACH550-xx-144A-6)				
Cable Temperature Rating	90 °C (194 °F) rating minimum.				
Maximum Motor Cable Length	**Frame Size**	**Max. Motor Cable Length***			
		f_{sw} = 1 or 4 kHz		**f_{sw} = 8 kHz or 12 kHz**	
	R1	100 m	330 ft	100 m	330 ft
	R2 (most) R6 (600 V)	200 m 100 m	650 ft 330 ft	100 m 100 m	330 ft 330 ft
	R3…R4	200 m	650 ft	100 m	330 ft
	R5…R6	300 m	980 ft	150 m	490 ft
	R7…R8	300 m	980 ft	Does not apply	

*** Warning! Using a motor cable longer than specified in the chart above may cause permanent damage to the drive.**

Ground Fault Protection

ACH550 internal fault logic detects ground faults in the drive, motor, or motor cable. This fault logic:

- Is NOT a personal safety or fire protection feature.
- Can be set to trigger only a warning using parameter 3017 EARTH FAULT.
- Could be tripped by leakage currents (input power to ground) associated with the use of an optional RFI/EMC filter.

Grounding and Routing

Background

Motor cables require extra care in grounding and routing. The reasons have to do with the following factors:

- Parasitic capacitance – Capacitors are, essentially, conductors that don't touch, but are in close proximity to each other. So, for example, there is a weak capacitive connection between cables and any conductors they are near. Such unintentional, but inevitable conductive paths are called parasitic capacitors. Currents flowing through these paths often create problems. For example, current leaks to control cables can create noise interference, leaks to the motor can damage bearings, and leaks to the drive or other electronic cabinets can damage components.
- Proximity – As the conductors get closer together, capacitance increases.
- Proximal area – As the area in close proximity increases, the capacitance increases, e.g. close parallel paths increase parasitic capacitance between conductors.
- AC frequency – For a given capacitance, increased AC frequency increases current conductance. Hence, capacitive paths that are negligible at 50/60 Hz can be very significant conductors at 8,000 Hz. Motor cable signals are pulses at up to 8,000 Hz and the common mode frequency can reach 48,000 Hz (8k Hz x 3 phases x 2 pulse edges).
- Alternate paths – Where multiple paths exist, the most conductive path draws the most current. So, the ground wiring must be a significantly better path, in order to reduce the current in the alternate paths, the paths through parasitic capacitors.

The high frequencies associated with motor cables also increase the potential for electromagnetic noise radiation. See "Motor Cable Requirements for CE & C-Tick Compliance" below.

Motor Cable Shielding

Motor cables require shielding using conduit, armored cable or shielded cable.

- Conduit – When using conduit:
  - Bridge joints with a ground conductor bonded to the conduit on each side of the joint.
  - Bond conduit run to the drive enclosure.
  - Use a separate conduit run for motor cables (also separate input power and control cables).
  - Use a separate conduit run for each drive.
- Armored Cable – When using armored cable:
  - Use six-conductor (3 phases and 3 grounds), type MC continuous corrugated aluminum armor cable with symmetrical grounds.
  - Armored motor cable can share a cable tray with input power cables, but not with control cables.
- Shielded Cable – For shielded cable details, see "Motor Cable Requirements for CE & C-Tick Compliance" below.

Grounding

See "Ground Connections" in "Input Power Connections" above.

For CE compliant installations and installations where EMC emissions must be minimized, see "Effective Motor Cable Screens" below.

Drive's Motor Connection Terminals

The drive's motor and input power terminals have the same specifications. See "Drive's Power Connection Terminals" above.

Motor Cable Requirements for CE & C-Tick Compliance

The requirements in this section apply for CE or C-Tick compliance.

Minimum Requirement (CE & C-Tick)

The motor cable must be a symmetrical three conductor cable with a concentric PE conductor or a four conductor cable with a concentric shield, however, a symmetrical constructed PE conductor is always recommended. The following figure shows the minimum requirement for the motor cable screen (for example, MCMK, NK Cables).

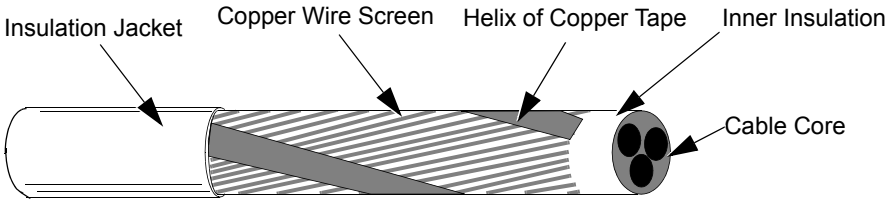

* Input filters designed for ACH550 cannot be used in an isolated, or high impedance earthed industrial distribution network.

Recommendation for Conductor Layout

The following figure compares conductor layout features in motor cables.

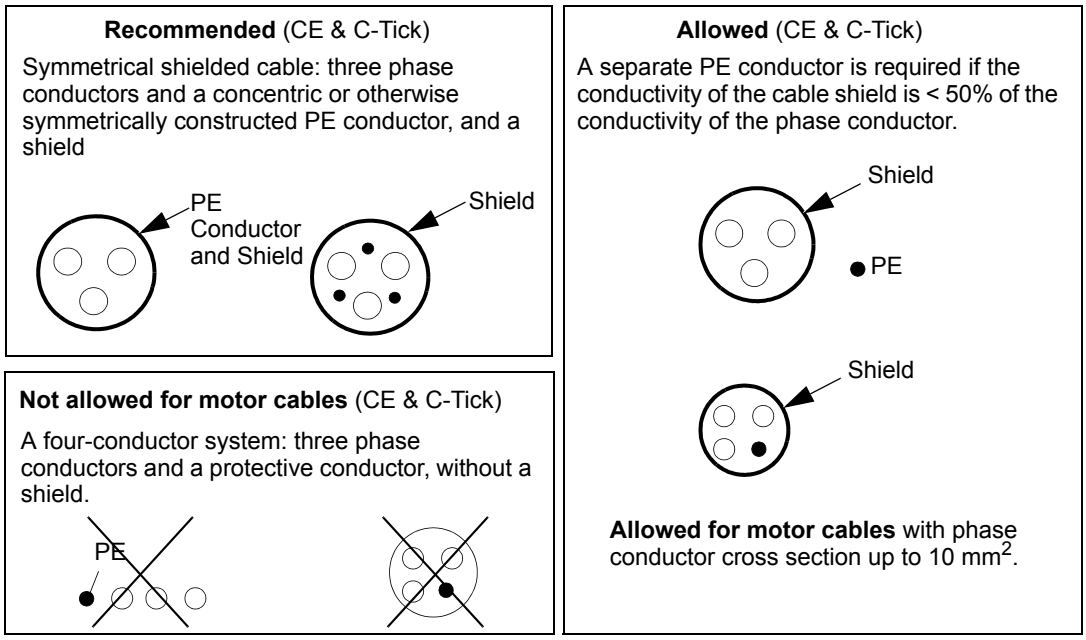

Effective Motor Cable Screens

The general rule for cable screen effectiveness is: the better and tighter the cable's screen, the lower the radiated emission level. The following figure shows an example of an effective construction (for example Ölflex-Servo-FD 780 CP, Lappkabel or MCCMK, NK Cables).

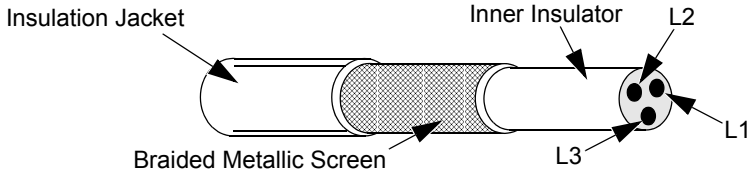

EN 61800-3 Compliant Motor Cables

To comply with EN 61800-3 requirements:

- Motor cables must have an effective screen as described in "Effective Motor Cable Screens" on page 268.
- Motor cable screen wires must be twisted together into a bundle (the bundle length must be less than five times its width) and connected it to the terminal marked ⏚ (at the bottom right-hand corner of the drive).
- Motor cables must be grounded, at the motor end, with an EMC cable gland. The ground must contact the cable screen all the way around the cable.
- For EN 61800-3 First Environment, Restricted Distribution (CISPR11 Class A), and EN 61800-3 Second Environment compliance, the drive includes an internal filter that provides compliance for at least 30 m (100 ft.) motor cable lengths. For some drives, longer cable lengths require an additional, external RFI/EMC filter as specified in the table below. The RFI/EMC filters are separate options and

installation must conform to the instructions in the filter package for all cable screen connections.

Maximum Cable Length for EN 61800-3 First Environment, Restricted Distribution (CISPR11 Class A) Compliance (Radiated and Conducted Emissions)					
Drive Type		**Switching Frequency (Parameter 2606)**			
		1 or 4 kHz (2606 = 1 or 4)		**8 kHz (2606 = 8)**	
		Max. Length / Internal Filter	**Max. Length / RFI/EMC Filter**	**Max. Length / Internal Filter**	**Max. Length / RFI/EMC Filter**
ACH550-xx-03A3-4	R1	100 m (330 ft) / Internal	Note 1	100 m (330 ft) / Internal	Note 1
ACH550-xx-04A1-4					
ACH550-xx-06A9-4					
ACH550-xx-08A8-4					
ACH550-xx-012A-4					
ACH550-xx-015A-4	R2	30 m (100 ft) / Internal	100 m (330 ft) / ACS400-IF21-3	30 m (100 ft) / Internal	100 m (330 ft) / ACS400-IF21-3
ACH550-xx-023A-4					
ACH550-xx-031A-4	R3	30 m (100 ft) / Internal	100 m (330 ft) / ACS400-IF31-3	30 m (100 ft) / Internal	100 m (330 ft) / ACS400-IF31-3
ACH550-xx-038A-4					
ACH550-xx-044A-4	R4	30 m (100 ft) / Internal	100 m (330 ft) / ACS400-IF41-3	30 m (100 ft) / Internal	100 m (330 ft) / ACS400-IF41-3
ACH550-xx-059A-4					
ACH550-xx-072A-4					
ACH550-xx-078A-4			Note 2		Note 2
ACH550-xx-077A-4	R5	100 m (330 ft) / Internal	Note 1	100 m (330 ft) / Internal	Note 1
ACH550-xx-096A-4					
ACH550-xx-124A-4	R6	100 m (330 ft) / Internal		Note 2	Note 2
ACH550-xx-157A-4					
ACH550-xx-180A-4					
ACH550-xx-245A-4	R7	100 m (330 ft) / Internal	Note 1	**Does Not Apply**	
ACH550-xx-316A-4	R8	--			
ACH550-xx-368A-4					
ACH550-xx-414A-4					
ACH550-xx-486A-4					
ACH550-xx-526A-4					
ACH550-xx-602A-4					
ACH550-xx-645A-4					

1. For any motor cable length (up to the100 m maximum length limit) compliance does not require an additional filter.
2. Data not available at time of publication.

Warning! Do not use RFI/EMC filters in a floating, or impedance grounded network.

- For EN 61800-3 First Environment, Unrestricted Distribution, (CISPR11 Class B) compliance with conducted emission limits, all drives require an additional, external RFI/EMC filter, and cable lengths are limited as specified in the table below. The RFI/EMC filters are separate options and installation must conform to the instructions in the filter package for all cable screen connections.

Note! The filter does not assure compliance with radiated emissions limits.

Maximum Cable Length for EN 61800-3 CE First Environment, Unrestricted Distribution (CISPR11 Class B) Compliance (Conducted Emissions Only)			
Drive Type		**Switching Frequency (Parameter 2606)**	
		1 or 4 kHz (2606 = 1 or 4)	**8 kHz (2606 = 8)**
		Max. Length / RFI/EMC Filter	**Max. Length / RFI/EMC Filter**
ACH550-xx-03A3-4	R1	10 m (33 ft) / ACS400-IF11-3	10 m (33 ft) / ACS400-IF11-3
ACH550-xx-04A1-4			
ACH550-xx-06A9-4			
ACH550-xx-08A8-4			
ACH550-xx-012A-4			
ACH550-xx-015A-4	R2	10 m (33 ft) / ACS400-IF21-3	10 m (33 ft) / ACS400-IF21-3
ACH550-xx-023A-4			
ACH550-xx-031A-4	R3	10 m (33 ft) / ACS400-IF31-3	10 m (33 ft) / ACS400-IF31-3
ACH550-xx-038A-4			
ACH550-xx-044A-4	R4	10 m (33 ft) / ACS400-IF41-3	10 m (33 ft) / ACS400-IF41-3
ACH550-xx-059A-4			
ACH550-xx-072A-4			

Warning! Do not use RFI/EMC filters in a floating, or impedance grounded network.

Control Connections

Control Connection Specifications

Control Connection Specifications	
Analog Inputs and Outputs	See table heading "Drive Control Terminal Description" on page 273.
Digital Inputs	Digital input impedance 1.5 kΩ. Maximum voltage for digital inputs is 30 V.
Relays (Digital Outputs)	• Max. contact voltage: 30 V DC, 250 V AC • Max. contact current / power: 6 A, 30 V DC; 1500 VA, 250 V AC • Max. continuous current: 2 A rms (cos φ = 1), 1 A rms (cos φ = 0.4) • Minimum load: 500 mW (12 V, 10 mA) • Contact material: Silver-nickel (AgN) • Isolation between relay digital outputs, test voltage: 2.5 kV rms, 1 minute

Control Cables

General Recommendations

Use multi-core cables with a braided copper wire screen, temperature rated at 60 °C (140 °F) or above:

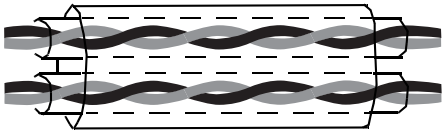

Double Shielded
Example: JAMAK by Draka NK Cables

Single Shielded
Example: NOMAK by Draka NK Cables

At the drive end, twist the screen together into a bundle not longer than five times its width and connected to terminal X1-1 (for digital and analog I/O cables) or to either X1-28 or X1-32 (for RS485 cables).

Route control cables to minimize radiation to the cable:

- Route as far away as possible from the input power and motor cables (at least 20 cm (8 in)).
- Where control cables must cross power cables make sure they are at an angle as near 90° as possible.
- Stay at least 20 cm (8 in) from the sides of the drive.

Use care in mixing signal types on the same cable:

- Do not mix analog and digital input signals on the same cable.
- Run relay-controlled signals as twisted pairs (especially if voltage > 48 V). Relay-controlled signals using less than 48 V can be run in the same cables as digital input signals.

Note! Never mix 24 VDC and 115/230 VAC signals in the same cable.

Note! Triacs used as sources for drive inputs, may have excessive leakage current in the OFF state, enough to read as ON to drive inputs. Driving two or more inputs, divides the leakage current, reducing or eliminating the problem. An alternative is to add a small capacitive load – see figure.

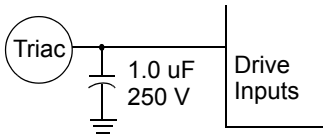

WARNING! Relay coils generate noise spikes in response to steps in applied power. To avoid drive damage from such spikes, all AC relay coils mounted across drive inputs require R-C snubbers, and all DC relay coils mounted across drive outputs require diodes – see figure.

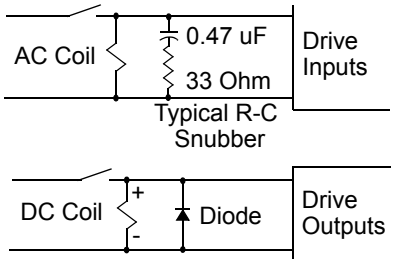

Analog Cables

Recommendations for analog signal runs:

- Use double shielded, twisted pair cable.
- Use one individually shielded pair for each signal.
- Do not use a common return for different analog signals.

Digital Cables

Recommendation for digital signal runs: A double shielded cable is the best alternative, but single-shielded, twisted, multi-pair cable is also usable.

Control Panel Cable

If the control panel is connected to the drive with a cable, use only Category 5 Patch ethernet cable.

Drive's Control Connection Terminals

The following table provides specifications for the drive's control terminals

Frame Size	Control			
	Maximum Wire Size		Torque	
	mm²	*AWG*	Nm	lb-ft
All	1.5	16	0.4	0.3

Control Terminal Descriptions

The following full-page diagram provides a general description of the control terminals on the drive. For specific application details, see the "Application Macros" on page 43.

Note! Terminals 3, 6, and 9 are at the same potential.

Note! For safety reasons the fault relay signals a "fault" when the ACH550 is powered down.

	X1		Drive Control Terminal Description
Analog I/O	1	SCR	Terminal for signal cable screen. (Connected internally to chassis ground.)
	2	AI1	Analog input channel 1, programmable. Default[2] = external reference. Resolution 0.1%, accuracy ±1%. J1:AI1 OFF: 0(2)…10 V (R_i = 312 kΩ) or, for OFF for ON J1:AI1 ON: 0(4)…20 mA (R_i = 100 Ω)
	3	AGND	Analog input circuit common (connected internally to chassis gnd. through 1 MΩ).
	4	+10 V	Potentiometer reference source: 10 V ±2%, max. 10 mA (1kΩ ≤ R ≤ 10kΩ).
	5	AI2	Analog input channel 2, programmable. Default[2] = PID feedback. Resolution 0.1%, accuracy ±1%. J1:AI2 OFF: 0(2)…10 V (R_i = 312 kΩ) or, for OFF for ON J1:AI2 ON: 0(4)…20 mA (R_i = 100 Ω)
	6	AGND	Analog input circuit common (connected internally to chassis gnd. through 1 MΩ).
	7	AO1	Analog output, programmable. Default[2] = frequency. 0…20 mA (load < 500 Ω).
	8	AO2	Analog output, programmable. Default[2] = current. 0…20 mA (load < 500 Ω).
	9	AGND	Analog output circuit common (connected internally to chassis gnd. through 1 MΩ).
Digital Inputs[1]	10	+24V	Auxiliary voltage output 24 VDC / 250 mA (reference to GND), short circuit protected.
	11	GND	Auxiliary voltage output common (connected internally as floating).
	12	DCOM	Digital input common. To activate a digital input, there must be ≥+10 V (or ≤-10 V) between that input and DCOM. The 24 V may be provided by the ACH550 (X1-10) or by an external 12…24 V source of either polarity.
	13	DI1	Digital input 1, programmable. Default[2] = start/stop.
	14	DI2	Digital input 2, programmable. Default[2] = not configured.
	15	DI3	Digital input 3, programmable. Default[2] = constant (preset) speed.
	16	DI4	Digital input 4, programmable. Default[2] = safety interlock.
	17	DI5	Digital input 5, programmable. Default[2] = not configured.
	18	DI6	Digital input 6, programmable. Default[2] = not configured.
Relay Outputs	19	RO1C	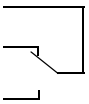 Relay output 1, programmable. Default[2] = Ready Maximum: 250 VAC / 30 VDC, 2 A Minimum: 500 mW (12 V, 10 mA)
	20	RO1A	
	21	RO1B	
	22	RO2C	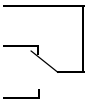 Relay output 2, programmable. Default[2] = Running Maximum: 250 VAC / 30 VDC, 2 A Minimum: 500 mW (12 V, 10 mA)
	23	RO2A	
	24	RO2B	
	25	RO3C	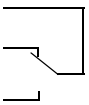 Relay output 3, programmable. Default[2] = Fault (-1) Maximum: 250 VAC / 30 VDC, 2 A Minimum: 500 mW (12 V, 10 mA)
	26	RO3A	
	27	RO3B	

1 Digital input impedance 1.5 kΩ. Maximum voltage for digital inputs is 30 V.

2 Default values depend on the macro used. Values specified are for the HVAC default macro. See "Application Macros" on page 43.

You can wire the digital input terminals in either a PNP or NPN configuration.

PNP connection (source)

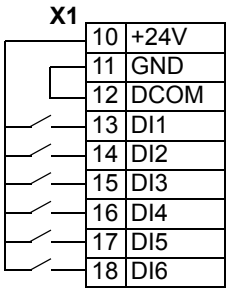

NPN connection (sink)

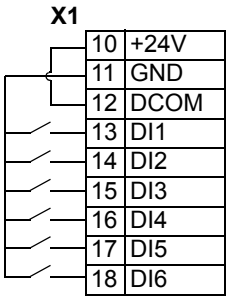

Serial Communications

Terminals 28...32 provide RS485 serial communication connections used to control or monitor the drive from a fieldbus controller. See "Embedded Fieldbus" on page 152 for details.

Efficiency

Approximately 98% at nominal power level.

Cooling

Cooling Specifications	
Method	Internal fan, flow direction from bottom to top.
Requirement	Free space above and below ACH550 drives (R1…R6): 200 mm (8 in). Free space above and below ACH550 drives (R7…R8): None required. Free space is not required on the drive's sides – ACH550 units can be mounted side-by-side.

Air Flow, 208…240 Volt Drives

The following table lists heat loss and air flow data for 208…240 Volt drives.

Drive		Heat Loss		Air Flow	
ACH550-xx-	**Frame Size**	**W**	**BTU/Hr**	**m^3/h**	**ft^3/min**
-04A6-2	R1	55	189	44	26
-06A6-2	R1	73	249	44	26
-07A5-2	R1	81	276	44	26
-012A-2	R1	116	404	44	26
-017A-2	R1	161	551	44	26
-024A-2	R2	227	776	88	52
-031A-2	R2	285	373	88	52
-046A-2	R3	420	1434	134	79
-059A-2	R3	536	1829	134	79
-075A-2	R4	671	2290	280	165

Drive		Heat Loss		Air Flow	
ACH550-xx-	**Frame Size**	**W**	**BTU/Hr**	**m^3/h**	**ft^3/min**
-088A-2	R4	786	2685	280	165
-114A-2	R4	1014	3463	280	165
-143A-2	R6	1268	4431	405	238
-178A-2	R6	1575	5379	405	238
-221A-2	R6	1952	6666	405	238
-248A-2	R6	2189	7474	405	238

Air Flow, 380…480 Volt Drives

The following table lists heat loss and air flow data for 380…480 Volt drives.

Drive		Heat Loss		Air Flow	
ACH550-xx-	**Frame Size**	**W**	**BTU/Hr**	**m^3/h**	**ft^3/min**
-03A3-4	R1	40	137	44	26
-04A1-4	R1	52	177	44	26
-06A9-4	R1	97	331	44	26
-08A8-4	R1	127	433	44	26
-012A-4	R1	172	587	44	26
-015A-4	R2	232	792	88	52
-023A-4	R2	337	1150	88	52
-031A-4	R3	457	1560	134	79
-038A-4	R3	562	1918	134	79
-044A-4	R4	667	2276	280	165
-059A-4	R4	907	3096	280	165
-072A-4	R4	1120	3820	280	165
-078A-4	R4	1295	4420	280	165
-077A-4	R5	1295	4420	168	99
-096A-4	R5	1440	4915	168	99
-124A-4	R6	1940	6621	405	238
-157A-4	R6	2310	7884	405	238
-180A-4	R6	2810	9590	405	238
-245A-4	R7	3850	13000	300	540
-316A-4	R8	5300	18000	700	1220
-368A-4	R8	6850	23000	700	1220
-414A-4	R8	7000	24000	700	1220
-486A-4	R8	7600	26000	700	1220
-526A-4	R8	7800	27000	700	1220
-602A-4	R8	8100	28000	700	1220
-645A-4	R8	9100	31000	700	1220

Air Flow, 500…600 Volt Drives

The following table lists heat loss and air flow data for 500…600 Volt drives.

Type Code	Frame Size	Heat Loss		Air Flow	
ACH550-UH- see below		W	BTU/Hr	m^3/h	ft^3/min
Three-phase supply voltage, **500**…**600 V**					
-02A7-6	R2	46	157	88	52
-03A9-6	R2	68	232	88	52
-06A1-6	R2	124	423	88	52
-09A0-6	R2	170	581	88	52
-011A-6	R2	232	792	88	52
-017A-6	R2	337	1150	88	52
-022A-6	R3	457	1560	134	79
-027A-6	R3	562	1918	134	79
-032A-6	R4	667	2256	280	165
-041A-6	R4	907	3096	280	165
-052A-6	R4	1120	3820	280	165
-062A-6	R4	1295	4420	280	165
-077A-6	R6	1504	5136	405	238
-099A-6	R6	1821	6219	405	238
-125A-6	R6	2442	8339	405	238
-144A-6	R6	2813	9607	405	238

Dimensions and Weights

The dimensions and mass for the ACH550 depend on the frame size and enclosure type. If unsure of frame size, first, find the "Type" code on the drive labels. Then look up that type code in the "Technical Data" on page 253, to determine the frame size. A complete set of dimensional drawings for ACH550 drives is located in the ACH550 Technical Reference manual.

Mounting Dimensions

R1…R6

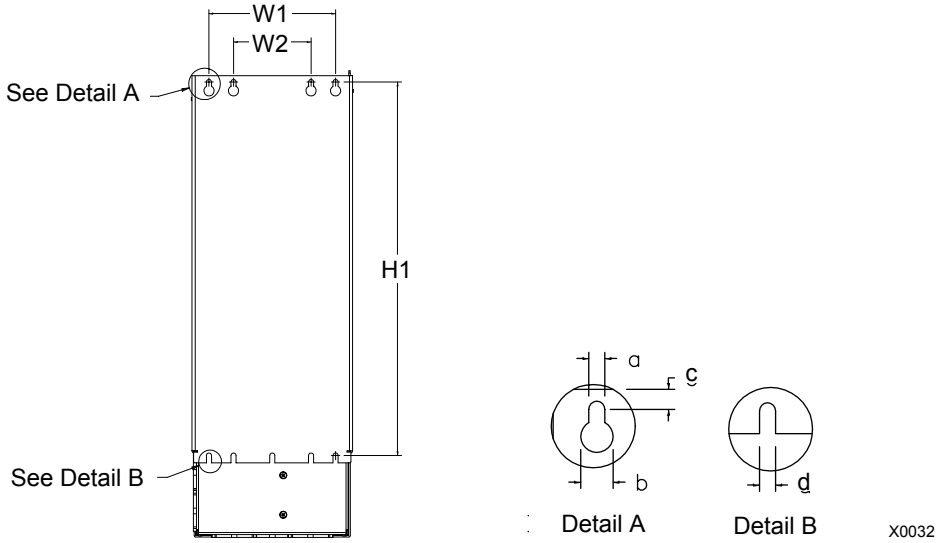

IP 21 / UL type 1 and IP 54 / UL type 12 – Dimensions for each Frame Size												
Ref.	**R1**		**R2**		**R3**		**R4**		**R5**		**R6**	
	mm	**in**	**mm**	**in**	**mm**	**in**	**mm**	**in**	**mm**	**in**	**mm**	**in**
W1*	98.0	3.9	98.0	3.9	160	6.3	160	6.3	238	9.4	263	10.4
W2*	--	--	--	--	98.0	3.9	98.0	3.9	--	--	--	--
H1*	318	12.5	418	16.4	473	18.6	578	22.8	588	23.2	675	26.6
a	5.5	0.2	5.5	0.2	6.5	0.25	6.5	0.25	6.5	0.25	9.0	0.35
b	10.0	0.4	10.0	0.4	13.0	0.5	13.0	0.5	14.0	0.55	14.0	0.55
c	5.5	0.2	5.5	0.2	8.0	0.3	8.0	0.3	8.5	0.3	8.5	0.3
d	5.5	0.2	5.5	0.2	6.5	0.25	6.5	025	6.5	0.25	9.0	0.35
Mounting Hardware												
	M5	#10	M5	#10	M5	#10	M5	#10	M6	1/4	M8	5/16

* Center to center dimension.

R7…R8

IP 21 / UL type 1 and IP 54 / UL type 12 – Dimensions for each Frame Size			
Ref.	**R7 & R8**		**Top View**
	mm	**in**	
W	806	31.7	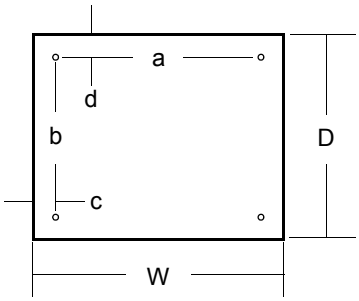
D	659	25.9	
a	675	26.6	
b	474.5	18.7	
c	61	2.4	
d	65.5	2.6	
Mounting Hardware			
	11 mm	13/32	

Weight

The following table lists typical maximum weights for each frame size. Variations within each frame size (due to components associated with voltage/current ratings, and options) are minor.

R1…R6

Enclosure	Weight											
	R1		R2		R3		R4		R5		R6	
	kg	lb.	kg	lb.	kg	lb.	kg	lb.	kg	lb.	kg	lb.
IP 21 / UL type 1	6.5	14.3	9.0	19.8	16	35.0	24	53.0	34	75	69	152
IP 54 / UL type 12	8.2	18.1	11.2	24.7	18.5	40.8	26.5	58.4	38.5	84.9	86	190

R7…R8

Enclosure	Weight			
	R7		R8	
	kg	lb.	kg	lb.
IP 21 / UL type 1	224	490	354	776
IP 54 / UL type 12	245	535	354	776

Outside Dimensions – R1…R6

Outside dimensions depend on frame size and enclosure type, as defined below.

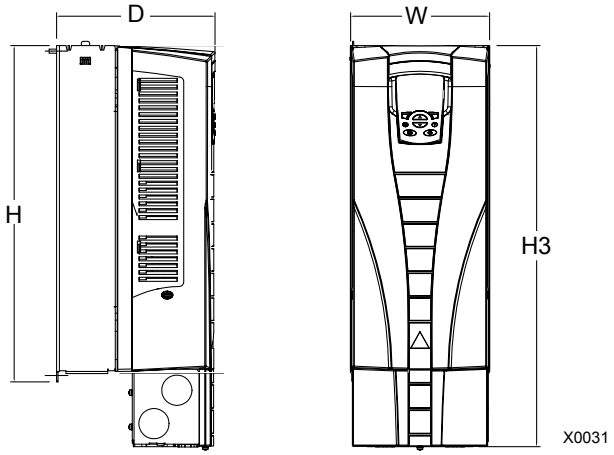

IP 21 / UL type 1 – Outside Dimensions by Frame Size (R1…R6)												
Ref.	R1		R2		R3		R4		R5		R6	
	mm	in	mm	in	mm	in	mm	in	mm	in	mm	in
W	125	4.9	125	4.9	203	8.0	203	8.0	265	10.4	300	11.8
H	330	13.0	430	16.9	490	19.2	596	23.4	602	23.7	700	27.6
H3	369	14.5	469	18.5	583	23.0	689	27.1	736	29.0	880	34.6
D	212	8.3	222	8.7	231	9.1	262	10.3	286	11.3	400	15.8

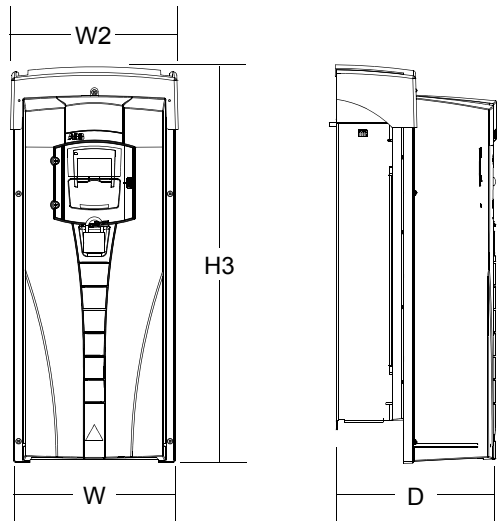

IP 54 / UL type 12 – Outside Dimensions by Frame Size (R1…R6)												
Ref.	R1		R2		R3		R4		R5		R6	
	mm	in	mm	in	mm	in	mm	in	mm	in	mm	in
W	213	8.4	213	8.4	257	10.1	257	10.1	369	14.5	410	16.1
W2	222	8.7	222	8.7	267	10.5	267	10.5	369	14.5	410	16.1
H3	461	18.2	561	22.1	629	24.8	760	29.9	776	30.5	924	36.4
D	234	9.2	246	9.7	254	10.0	285	11.2	309	12.2	423	16.6

Outside Dimensions – R7…R8

Outside dimensions for the R7 and R8 cabinets are defined below.

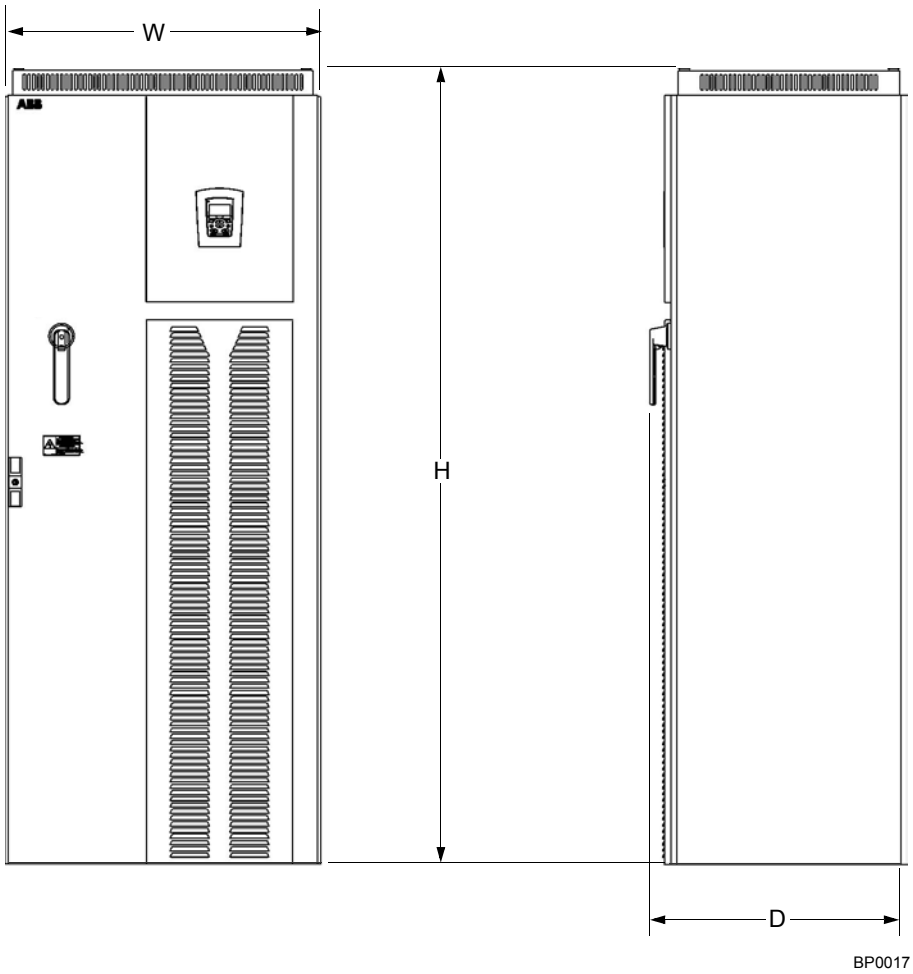

Outside Dimensions by Frame Size					
Enclosure	**Ref.**	**R7**		**R8**	
		mm	**in**	**mm**	**in**
IP 21 / UL type 1	**W**	806	31.7	806	31.7
	H	2065	81.3	2065	81.3
	D	659	25.9	659	25.9
IP 54 / UL type 12	**W**	806	31.7	806	31.7
	H	2318	91.3	2318	91.3
	D	659	25.9	659	25.9

Degrees of Protection

Available enclosures:

- IP 21 / UL type 1 enclosure. The site must be free of airborne dust, corrosive gases or liquids, and conductive contaminants such as condensation, carbon dust, and metallic particles.
- IP 54 / UL type 12 enclosure. This enclosure provides protection from airborne dust and light sprays or splashing water from all directions.

Compared to the IP 21 / UL type 1 enclosure, the IP 54 / UL type 12 enclosure has:

- The same internal plastic shell as the IP 21 enclosure
- A different outer plastic cover
- An additional internal fan to improve cooling.
- Larger dimensions
- The same rating (does not require a derating).

Ambient Conditions

The following table lists the ACH550 environmental requirements.

Ambient Environment Requirements		
	Installation Site	**Storage and Transportation in the protective package**
Altitude	• 0…1000 m (0…3,300 ft) • 1000…2000 m (3,300…6,600 ft) if P_N and I_2 derated 1% every 100 m above 1000 m (300 ft above 3,300 ft)	
Ambient temperature	• Min. -15 ºC (5 ºF) – no frost allowed • Max. (fsw = 1 or 4) 40 ºC (104 ºF); 50 ºC (122 ºF) if P_N and I_2 derated to 90% • Max. (fsw = 8) 40 ºC (104 ºF) if P_N and I_2 derated to 80% • Max. (fsw = 12) 30 ºC (86 ºF) if P_N and I_2 derated to 65% (to 50% for 600 V, R4 frame sizes, that is for ACH550-xx-032A-6…Ach550-xx-062A-6).	-40…70 ºC (-40…158 ºF)
Relative humidity	< 95% (non-condensing)	
Contamination levels (IEC 721-3-3)	• No conductive dust allowed. • The ACH550 should be installed in clean air according to enclosure classification. • Cooling air must be clean, free from corrosive materials and free from electrically conductive dust. • Chemical gases: Class 3C2 • Solid particles: Class 3S2	Storage • No conductive dust allowed. • chemical gases: Class 1C2 • solid particles: Class 1S2 Transportation • No conductive dust allowed. • Chemical gases: Class 2C2 • Solid particles: Class 2S2

The following table lists the standard stress testing that the ACH550 passes.

Stress Tests		
	Without Shipping Package	**Inside Shipping Package**
Sinusoidal vibration	Mechanical conditions: In accordance with IEC 60721-3-3, Class 3M4 • 2…9 Hz 3.0 mm (0.12 in) • 9…200 Hz 10 m/s^2 (33 ft/s^2)	In accordance with ISTA 1A and 1B specifications.
Shock	Not allowed	In accordance with IEC 68-2-29: max. 100 m/s^2 (330 ft/s^2), 11ms (36 fts)
Free fall	Not allowed	• 76 cm (30 in), frame size R1 • 61cm (24 in), frame size R2 • 46 cm (18 in), frame size R3 • 31 cm (12 in), frame size R4 • 25 cm (10 in), frame size R5 • 15 cm (6 in), frame size R6

Materials

Material Specifications	
Drive enclosure	R1…R6: • PC/ABS 2.5 mm, color NCS 1502-Y (RAL 90021 / PMS 420 C and 425 C) • Hot-dip zinc coated steel sheet 1.5…2 mm, thickness of coating 100 micrometers • Cast aluminium AlSi • Extruded aluminium AlSi R7…R8: Sheet metal
Package	R1…R6: Corrugated board, expanded polystyrene, plywood, raw wood (heat dried). Package wrap consists of one or more of the following: PE-LD plastic wrap, PP or steel bands. R7…R8: Wood pallet
Disposal	The drive contains raw materials that should be recycled to preserve energy and natural resources. The package materials are environmentally compatible and recyclable. All metal parts can be recycled. The plastic parts can either be recycled or burned under controlled circumstances, according to local regulations. Most recyclable parts are marked with recycling marks. If recycling is not feasible, all parts excluding electrolytic capacitors and printed circuit boards can be landfilled. The DC capacitors contain electrolyte and the printed circuit boards contain lead, both of which will be classified as hazardous waste within the EU. They must be removed and handled according to local regulations. For further information on environmental aspects and more detailed recycling instructions, please contact your local ABB distributor.

Applicable Standards

Drive compliance with the following standards is identified by the standards "marks" on the type code label.

Mark	Applicable Standards	
CE	EN 50178 (1997)	Electronic equipment for use in power installations
	EN 60204-1 (1997 + corrigendum Sep. 1998)	Safety of machinery. Electrical equipment of machines. Part 1: General requirements. *Provisions for compliance:* The final assembler of the machine is responsible for installing: • An emergency-stop device • A supply disconnecting device
	EN 60529 (1991 + corrigendum May 1993 + amendment A1:2000)	Degrees of protection provided by enclosures (IP code)
	EN 61800-3 (1996) + Amendment A11 (2000)	EMC product standard including specific test methods
	EN 61800-3 (1996) + Amendment A11 (2000)	EMC product standard including specific test methods
c UL us LISTED	UL 508C	UL Standard for Safety, Power Conversion Equipment, second edition
	C22.2 No. 14	CSA Standard for Industrial Control Equipment

Compliance is valid with the following provisions:

- The motor and control cables are chosen as specified in this manual.
- The installation rules of this manual are followed.

UL Markings

When a UL mark is attached to the ACS550 AC drive, it verifies that the drive follows the provisions of UL 508C.

When a CSA mark is attached to the ACS550 AC drive, it verifies that the drive follows the provisions of C22.2 No. 14.

The ACS550 is UL and CSA listed to 100 KAIC without use of input fuses or circuit breaker. For end-users convenience, the section "Fuses" provides fuse recommendations. Branch circuit protection must to be provided per local code.

Note! UL508A manufactures are not required to use the fuse recommendations for the purpose of UL Listing a panel with an ACH550 AFD.

The ACS550 has an electronic motor protection feature that complies with the requirements of UL 508C and CSA C22.2 No. 14. When this feature is selected and properly adjusted, additional overload protection is not required unless more than one motor is connected to the drive or unless additional protection is required by applicable safety regulations. See parameters 3005 (MOT THERM PROT) and 3006 (MOT THERM TIME).

The drives are to be used in a controlled environment. See section "Ambient Conditions" on page 282 for specific limits.

For open type enclosures, units must be mounted inside an enclosure per National Electrical Code and local electrical codes. Open type enclosures are IP21 / UL type 1 units without the conduit box and/or cover, or IP54 / UL type 12 units without the conduit plate and/or top cover.

EMC (Europe, Australia, and New Zealand)

This section describes conformance with EMC requirements (in Europe, Australia, and New Zealand).

CE Marking

When a CE mark is attached to the ACH550 AC drive, it verifies that the drive follows the provisions of the European Low Voltage and EMC Directives (Directive 73/23/EEC, as amended by 93/68/EEC and Directive 89/336/EEC, as amended by 93/68/EEC). The corresponding declarations are available on request and can be found using the internet at: http://www.abb.com.

The EMC Directive defines the requirements for immunity and emissions of electrical equipment used in European Economic Area. The EMC product standard EN 61800-3 covers the requirements stated for drives, such as the ACH550. The drive complies with the First environment (restricted distribution) and Second Environment limits of EN/IEC 61800-3.

C-Tick Marking

When a C-Tick mark is attached to the ACH550 drive, it verifies compliance with the relevant standard, IEC 61800-3 (1996) – Adjustable speed electrical power drive systems – Part 3: EMC product standard including specific test methods, mandated by the Trans-Tasman Electromagnetic Compatibility Scheme. The drive complies with the First environment (restricted distribution) and Second Environment limits of EN/IEC 61800-3.

Electromagnetic Environments

Product standard EN 61800-3 (Adjustable speed electrical power drive systems - Part 3: EMC product standard including specific test methods) defines **First Environment** as environment that includes domestic premises. It also includes establishments directly connected without intermediate transformers to a low voltage power supply network which supplies buildings used for domestic purposes.

Second Environment includes establishments other than those directly connected to a low voltage power supply network which supplies buildings used for domestic purposes.

Liability Limits

The manufacturer is not responsible for:

- Any costs resulting from a failure if the installation, commissioning, repair, alteration, or ambient conditions of the drive do not fulfil the requirements specified in the documentation delivered with the unit and other relevant documentation.
- Units subjected to misuse, negligence or accident.
- Units comprised of materials provided or designs stipulated by the purchaser.

In no event shall the manufacturer, its suppliers or subcontractors be liable for special, indirect, incidental or consequential damages, losses or penalties.

If you have any questions concerning your ABB drive, please contact the local distributor or ABB office. The technical data, information and specifications are valid at the time of printing. The manufacturer reserves the right to modifications without prior notice.

Index

Numerics

0xxxx register
EFB function codes 169
EFB mapping 167
1xxxx register
EFB function codes 170
EFB mapping 169
3xxxx register
EFB function codes 170
EFB mapping 170
4xxxx register
EFB function codes 172
EFB mapping 170

A

acceleration
at aux. stop (PFA), parameter 149
compensation, parameter 101
ramp select, parameter 98
ramp shape, parameter 98
ramp time (PFA), parameter 149
ramp zero select, parameter 99
time, parameter 98
/deceleration, parameter group 98
activate (external PID), parameter 133
actual input (PID), parameters 129
actual max. (PID), parameters 129
actual min. (PID), parameters 129
actual signals, parameter group 65
actual value
mapping, FBA, generic profile 238
actual values
scaling, EFB comm 163
scaling, FBA 227
scaling, FBA, ABB drives profile 236
scaling, FBA, generic profile 238
scaling, FLN fieldbus 197
air flow 274
alarm
codes 246
enable display, parameter 89
listing 246
altitude
environment limit 282
shipping limit 282
altitude derating 256
analog cable
requirements 272
analog input
BACnet object listing 215
data parameter 62
fault limit, parameters 109
filter, parameters 80
less than min. auto. reset, parameter 110
less than min., fault parameter 106
loss, fault codes 241
maximum, parameters 80
minimum, parameters 80
N2 object listing 188
parameter group 80
ref. correction formula 74
analog I/O
connections 273
specifications 273
analog output
BACnet object listing 215
content max., parameters 84
content min., parameters 84
current max., parameters 84
current min., parameters 84
data content, parameters 84
data parameter 62
filter, parameters 85
N2 object listing 190
parameter group 84
application block output, data parameter 61
application macro, parameter 59
applications
see macros
autochange
interval, parameter 143
level, parameter 143
overview 143
starting order counter 144
automatic reset
see reset, automatic
auxiliary motor
see motor, auxiliary

B

backing up parameters (Assistant panel) 35
backup
drive parameters 35

BACnet
autobaud detection 208
data link layer 208
mac id 208
max info frame property 208
object, analog inputs 215
object, analog outputs 215
object, analog values 216
object, binary inputs 212
object, binary outputs 212
object, binary values 213
object, definitions 211
pics, statement 209
pics, summary 208
services supported 208
support, matrix 211
battery
assistant control panel 252
baud rate detection, BACnet 208
baud rate (RS232), parameter 136
binary input
BACnet object listing 212
N2 object listing 189
binary output
BACnet object listing 212
N2 object listing 191
branch circuit protection 257
break point frequency, fault parameter 107
buffer overruns (count), parameter 136

C

cable requirements
grounding 261
input power 260
motor 267
CE marking 285
CISPR11 class A
radiation limits 268
CISPR11 class B
radiation limits 270
clock 39
com (EFB)
baud rate, parameter 137
config file, fault code 243
control profile, parameter 137
CRC errors (count), parameter 137
fault codes 243
ok messages (count), parameter 137
parameters 138
parity, parameter 137
protocol id, parameter 137
protocol, parameter group 137
station id, parameter 137
status, parameter 137
UART errors (count), parameter 137
comm
fault function, parameter 109
fault time, parameter 109
protocol select, parameter 151
relay output word, data parameter 63
values, data parameter 63
comm (EFB)
actual value scaling 163
actual values 162
also see RS232 136
analog output control, activate 161
comm fault response 161
configuration 155
configure for loss of communication 164
control interface 153
control word 174
diagnostics 164
drive control of functions, activate 157
exception codes 173
fault code 28 165
fault code 31 165
fault code 32 165
fault code 33 165
fault tracing parameters 164
fault, duplicate stations 165
fault, intermittent off-line 165
fault, no master station on line 165
fault, swapped wires 165
feedback from drive 162
feedback from drive, mailbox 162
input ref. sel., activate 158
installation 154
mailbox, param. read/write 162
misc. drive control, activate 159
modbus actual values 173
normal operation 164
overview 152
parameter group 136
PID control setpoint source, activate 161
planning 153
profiles 167
reference scaling, ABB drives profile 183
relay output control, activate 160
set-up 155
start/stop control, activate 157
state diagram 182
status word 177
termination 154

comm (FBA)
actual values 221
analog output control, activate 225
comm fault response 226
config file CPI firmware revision, parameter 135
config file id revision, parameter 135
config file revision, parameter 135
configuration 223
control interface 220
control word 220
control word, ABB drives 229
diagnostics 227
drive feedback 226
fieldbus control, activate 223
fieldbus CPI firmware revision, parameter . 135
fieldbus parameter refresh, parameter 135
fieldbus parameters 135
fieldbus status, parameter 135
fieldbus type, parameter 135
input ref. sel., activate 224
installation 222
overview 219
parameter group 135
PID control setpoint source, activate 226
planning 221
protocol listing 219
reference 221
relay output control, activate 225
set-up 223
start/stop control, activate 223
state diagram, ABB drives 232
status word 221
status word, ABB drives 231
compression lugs 264
conduit
kit 14
config file
CPI firmware revision, parameter 135
fault code 243
id revision, parameter 135
revision, parameter 135
connections
EFB comm 154
FBA module 222
constant speed
see speed, constant
construction code 9
contamination levels
environment limit 282
shipping limit 282
contrast, control panel 27
control
connection specifications 271
location, data parameter 61
terminal descriptions 273
control cable
requirements 271
control panel
backup, drive parameters 35
cable requirements 272
changed parameters mode 34
clock set 39
comm error, fault parameter 106
contrast 27
display contrast 27
display decimal point (form), parameters . . . 114
display max., parameters 115
display min., parameters 115
display process variables, parameter group . 114
display selection, parameters 114
display units, parameters 115
features 27
i/o settings mode 42
modes 30
operating the drive 31
parameter editing 28
parameter lock, parameter 86
parameters mode 31
pass code, parameter 86
reference control, parameter 72
signal max., parameters 114
signal min., parameters 114
soft keys 27
start-up assistant 28
start-up assistant mode 33
status information 30
control panel (Assistant)
battery 252
fault logger mode 35
parameter backup mode 35
control word
ABB drives, FBA, description 229
comm (EFB), description 174
FBA 220
FBA generic profile 237
cooling 274
fan maintenance triggers 105
correction source (PID), parameter 134
cover
remove 12
replace 22
CRC errors (count), parameter 136
critical speeds (avoiding)
high, parameters 102
low, parameters 102
parameter group 102
select, parameter 102
C-Tick marking 285
current
at fault, history parameter 69
data parameter 61
max. limit, parameter 93
measurement, fault code 242
rating code 9

D

DC brake time, parameter 97
DC bus voltage, data parameter 61
DC current ref., parameter 97
DC magnetizing time, parameter 96

DC overvoltage, fault code 240
DC undervoltage, fault code 241
DDL file (N2) 191
deceleration
at aux. start (PFA), parameter 150
emergency time, parameter 99
parameter group 98
ramp select, parameter 98
ramp shape, parameter 98
ramp time (PFA), parameter 150
ramp zero select, parameter 99
time, parameter 98
default macro 45
derating
altitude 256
single phase supply 256
switching frequency 256
temperature 256
derivation time (PID), parameter 126
derivation time, parameter 100
device overtemperature, fault code 240
device type (N2) 188
diagnostics 239
EFB comm 164
FBA comm 227
differences list, downloads 38
digital cable
requirements 272
digital input
at fault, history parameters 69
connections 273
specifications 271
status, data parameter 62
digital output
connections 273
specifications 271
dimensions
mounting 277
outside, enclosure 279
direction
control, parameter 71
display format (PID), parameter 126
download
failure 39
handling inexact transfers 38
parameter sets 36
drive
control terminal descriptions 273
device type (N2) 188
EFB comm installation 154
FBA module installation 222
identification 8
id, fault code 242
proper lifting 8
rating, parameter 113
temperature, data parameter 61
weight 278
drive on time, data parameters 63
du/dt filter 9

E

earth fault
fault code 242
parameter 108
earthing
see ground
EFB
parameters 138
efficiency 274
EM3 screw 261
embedded field bus
see comm (EFB)
EMC
CE marking 285
C-Tick marking 285
motor cable requirements 267
emergency
deceleration time, parameter 99
stop devices 259
stop select, parameter 97
EN 61800-3 first environment
restricted distribution radiation limits 268
unrestricted distribution radiation limits 270
enclosure protection class code 9
encoder err, fault code 242
encoder, data parameters 64
environment
first, definition 285
second, definition 285
error value inversion (PID), parameter 126
exception codes, EFB modbus 173
external comm module, parameter group 135
external commands selection, parameter 70
external control selection, parameter 72
external fault
automatic reset, parameter 110
fault codes 241
parameters 106
external reference, data parameter 61

F

fan maintenance 250

fault
codes. 240
comm failure (EFB) 161
comm (FBA) 226
current at, history parameter. 69
digital input status at, history parameter 69
frequency at, history parameter 69
functions, parameter group 106
history 246
history, parameter group. 69
last, history parameter. 69
listing. 240
previous, history parameter. 69
reset 245
reset select, parameter 86
speed at, history parameter 69
status at, history parameter. 69
time of, history parameters 69
torque at, history parameter 69
voltage at, history parameter. 69
words, data parameters 67
fault code
28 serial 1 err 165
fault logging (Assistant panel) 35
features
N2 fieldbus 186
feedback multiplier (PID), parameter. 129
feedback select (PID), parameter 128
field weakening point. 265
fieldbus
see comm
command words, data parameters 65
CPI firmware revision, parameter 135
parameter refresh, parameter. 135
parameters 135
status words, data parameters 66
status, parameter 135
type, parameter. 135
fieldbus termination 274
firmware test date, parameter 113
firmware version, parameter 113
first environment, definition 285
FLN fieldbus
also see comm (EFB)
description. 194
loop gains 198
point database. 199
point descriptions 202
reports. 194
supported features 194
floating network
connections. 262
warning about filters 269, 270
warning about screws at EM1, EM3 16
warning about screws at F1, F2 17
flux braking, parameter 103
flux optimization, parameter 103
force trip, fault code. 243
frame errors (count), parameter 136
frame size 253
free fall
stress testing. 282
frequency
at fault, history parameter. 69
max. limit, parameter 94
min. limit, parameter. 94
motor, resolution. 265
motor, specification 265
switching, parameter 104
fuses 257
208...240 volt drives 258
380...480 volt drives 258
500...600 volt drives 259

G

gain (PID), parameter 125
generic profile
actual value mapping 238
actual value scaling 238
overview 237
reference scaling 237
technical data 237
gland kit 14
ground
cable/wire requirements 261
ground fault protection 266
grounding 266

H

heat loss 274

I

id run fail, fault code 241
IEC ratings
see ratings
impedance grounded network
see floating network
incomp swtype, fault code. 243
information
parameter group. 113
input power
branch circuit protection 257
cable/wire requirements 260
fuses. 257
specifications 257
input power connection
floating networks
lugs for R6 263
terminal size 263
torque 263
installation
compatibility 9
environment 10
flow chart 7
location. 10
preparation 8
procedures 7
tools 10
insulation
check 18
integration time (PID), parameter 126
integration time, parameter. 100

interlocks
parameter 144
internal setpoint (PID), parameter 128
IR compensation
frequency, parameter 103
parameters 103
voltage, parameter 103
IT network
see floating network

K

keypad reference select, parameter 72
kWh counter, data parameter 61

L

label
serial number 8
type code 8
language, parameter 59
liability limits 286
limits, parameter group 93
load package version, parameter 113
local mode
lock, parameter 87
low frequency (PFA), parameters 141
lugs for R6 power cables 263

M

macros
booster pump 50
condenser 49
cooling tower fan 48
dual setpoint w/ PID 55
dual setpoint w/ PID & const. speeds 56
e-bypass 57
floating point 54
hand control 58
HVAC default 45
internal timer 52
internal timer w/constant speeds 53
listing 43
pump alternation 51
return fan 47
supply fan 46
to select 44
mailbox, EFB comm 162
mains
see input power
maintenance
capacitors 251
control panel 252
heat sink 249
internal enclosure fan 251
intervals 249
main fan 250
triggers, parameter group 105
manuals 2
mapping
actual value, FBA, generic profile 238
EFB modbus 167
materials 283
maximum
frequency, parameter 94
torque limit, parameters 95
torque select, parameter 94
metasys
connection diagram (companion) 188
connection diagram (system) 187
integration 187
minimum
frequency, parameter 94
torque limit, parameters 95
torque select, parameter 94
modbus
EFB addressing, convention 167
EFB coils 167
EFB discrete inputs 169
EFB holding registers 170
EFB input registers 170
EFB mapping details 167
EFB mapping summary 167
EFB supported features 166
EFB technical data 166
motor
aux. start delay (PFA), parameter 141
aux. stop delay (PFA), parameter 141
checking insulation 18
compatibility 9
connection specifications 265
control mode, parameter 59
id run, parameter 60
load curve break point frequency 107
load curve max., fault parameter 107
load curve zero speed load 107
maintenance triggers 105
nominal current, parameter 60
nominal frequency, parameter 60
nominal power, parameter 60
nominal speed, parameter 60
nominal voltage, parameter 60
number of aux., parameter 142
phase, fault code 243
stall, fault code 241
temperature alarm limit, parameter 119
temperature fault limit, parameter 119
temperature measure, parameter group . . . 117
temperature sensor selection, parameter . . 119
temperature sensor type, parameter 118
temperature, data parameter 63
thermal protection, fault parameter 106
thermal time, fault parameter 107
motor cable
checking insulation 18
max. length 265
max. length, 1st environment (class A) 269
max. length, 1st environment (class B) 270
requirements 267
requirements, EMC 267
motor connection
lugs for R6 263
terminal size 263
torque 263
motor control
IR compensation, parameters 103
parameter group 103

motor temperature
overtemperature, fault code 241
motor, NEMA MG1 part 31 9
MWh counter, data parameter. 63

N

N2 fieldbus
also see comm (EFB)
description. 186
node limit. 188
supported features 186
NCU
see network control unit
NEMA ratings
see ratings
network control unit
description. 186
N2 DDL file 191
noise
random sw. freq. parameter 104
NPN 274

O

object
virtual, description 186
offset (PID), parameter 133
ok messages (count), parameter. 136
operating data, parameter group 61
OPEX link, fault code. 242
OPEX power, fault code 242
options, parameter group 151
output frequency, data parameter 61
output voltage, data parameter 61
output wiring
fault code. 243
overcurrent
automatic reset, parameter 110
fault code. 240
overspeed, fault code 242

P

panel display variables, parameter group 114
panel loss, fault code. 241
par override pars, fault code 245
par pfa override, fault code 245
parameter
analog input scale, fault code 244
analog output scale, fault code 244
change lock. 86
external relay output, fault code 244
fieldbus, fault code 244
hz rpm, fault code 244
PCU 1 (power control unit), fault code 229, 245
PCU 2 (power control unit), fault code 244
PFC mode, fault code 244
PFC ref. neg., fault code 244
restore (Assistant panel) 35
save changes, parameter 87
parameters
editing 28
view changes 34
parity errors (count), parameter 136
parity (RS232), parameter 136
PE earth
earth fault, parameter 108
PE earth connection
terminal size 263
torque 263
PFA
acceleration time, parameter 149
aux. motor start delay, parameter 141
aux. motor stop delay, parameter. 141
control, parameter group 139
deceleration time, parameter 150
enable, parameter 149
low frequency, parameters 141
number of aux. motors, parameter 142
reference step, parameters 139
start delay, parameter 149
start frequency, parameters 140
PFC (pump fan control)
see PFA (pump fan alternation)
PID
0% (actual signal), parameter 127
100% (actual signal), parameter 127
actual input select, parameters 129
actual value max., parameters 129
actual value min., parameters 129
adjustment procedure. 125
correction source, parameter 134
decimal point (actual signal), parameter . . . 126
derivation filter, parameter 126
derivation time, parameter 126
deviation, data parameter. 63
error feedback inversion, parameter 126
external source activate, parameter 133
external / trimming, parameter group 133
feedback multiplier, parameter 129
feedback select, parameter 128
feedback, data parameter 62
gain, parameter 125
integration time, parameter 126
internal setpoint, parameter 128
offset, parameter 133
output, data parameter 62
parameter set select, parameter 131
process sets, parameter groups. 124
scaling (0%...100%), parameters 127
setpoint maximum, parameter 128
setpoint minimum, parameter. 128
setpoint select, parameter 127
setpoint source, EFB comm activate 161
setpoint source, FBA comm, activate. 226
setpoint, data parameter 62
sleep delay, parameter. 130
sleep level, parameter 130
sleep selection, parameter 130
trim mode, parameter 133
trim scale, parameter 133
units (actual signal), parameter 126
wake-up delay, parameter 131
wake-up deviation, parameter 131
PID controller
advanced set-up. 125
basic set-up 124

planning
EFB comm 153
FBA comm 221
PNP 274
power
data parameter 61
first applied 24
previous faults, history parameters 69
process PID sets, parameter groups 124
process variables, data parameter 63
profiles
abb drives, overview 174
comm (EFB) 167
dcu, overview 174
proportional gain, parameter 100
protection
branch circuit 257
enclosure standard 284
environmental 281
protocol
BACnet, technical data 208
protocol implementation conformance statement
see BACnet, pics
PT100 temperature sensor 118
PTC temperature sensor 118

R

radiation limits, conducted
EN 61800-3 268
ramp pair (accel/decel), parameter 98
ratings 253
r-c snubber, drive input protection 272
reference
analog input corrections 74
corrections for parameter values 74
keypad control, parameter 72
maximum, parameters 74
minimum, parameters 74
select source, parameter 73
select, parameter group 72
reference scaling
EFB, ABB drives profile 183
FBA, ABB drives profile 233
FBA, generic profile 237
reference step (PFA), parameters 139
regulator by-pass control, parameter 148
relative humidity
environment limit 282
shipping limit 282
relay output
activation condition parameters 81
off-delay, parameters 82
on-delay, parameters 82
parameter group 81
status, data parameter 62
relays, specifications 271
remove cover 12
reports, FLN fieldbus 194
reset, automatic
analog input less than min., parameter 110
delay time, parameter 110
external fault, parameter 110
number of trials, parameter 110
overcurrent, parameter 110
parameter group
trial time, parameter 110
undervoltage, parameter 110
resonance (avoiding)
select, parameter 102
revolution counter, data parameter 63
ring lugs 263
RS232
baud rate, parameter 136
panel, parameter group 136
parity, parameter 136
station id, parameter 136
RS232 counts
buffer overruns, parameter 136
CRC errors, parameter 136
frame errors, parameter 136
ok messages, parameter 136
parity errors, parameter 136
RS485 274
RS485 comm 154
run enable
source select, parameter 86
run time, data parameter 61, 63

S

safety 3
scalar control mode 59
scaling
actual values, EFB comm 163
actual value, FBA, ABB drives profile 236
actual value, FBA, generic profile 238
FLN actual values 197
reference (EFB, ABB drives profile) 183
reference, FBA, ABB drives profile 233
reference, FBA, generic profile 237
s-curve ramp, parameter 98
sensor type, parameter 118
sensorless vector control mode 59
serial 1 error (fault code 28) 165
serial 1 error, fault code 243
serial communication
see comm
serial number 8
setpoint maximum (PID), parameter 128
setpoint minimum (PID), parameter 128
setpoint select (PID), parameter 127
shock
stress testing 282
short circuit, fault code 240
single phase supply
connection 14
derating 256
sleep selection (PID), parameter 130
slip compensation ratio, parameter 104
soft keys, control panel 27

specifications
control connections 271
cooling. 274
input power 257
mains. 257
motor connections. 265
speed
at fault, history parameter 69
data parameter 61
max. limit, parameter. 93
min. limit, parameter 93
speed control
acceleration compensation, parameter. . . . 101
automatic tuning, parameter 101
derivation time, parameter 100
integration time, parameter 100
parameter group 100
proportional gain, parameter. 100
speed, constant
digital input selection parameter 76
parameter 78
parameter group 76
stall
frequency, fault parameter 108
function, fault parameter 108
region 108
time, fault parameter 108
standards. 284
CE marking 285
CSA C22.2 No. 14. 284
CSA marking 284
C-Tick marking 285
EN 50178 284
EN 60204-1. 284
EN 60529 284
EN 61800-3. . . . . 284, 285
IEC 60664-1 284
UL 508C 284
UL marking 284
start
aux. motor delay 141
aux. motor (PFA), parameters. 140
control, EFB comm 157
control, FBA comm 223
DC magnetizing time, parameter 96
delay (PFA), parameter. 149
frequency (PFA), parameters 140
function, parameter 96
inhibit, parameter 97
parameter group 96
torque boost current, parameter 97
start mode
automatic. 96
automatic torque boost 96
DC magnetizing. 96
flying start 96
starting order counter 144
start-up
macros 26
motor data. 25
tuning 26
start-up assistant 28
start-up data, parameter group 59
start/stop, parameter group. 96
start/stop/dir, parameter group 70
state diagram
comm (EFB) 182
comm, ABB drives 232
station id (RS232), parameter. 136
status at fault, history parameter. 69
status word
ABB drives, FBA, description 231
comm (EFB), definition. 177
FBA 221
FBA generic profile. 237
stop
aux. motor delay. 141
aux. motor (PFA), parameters 141
DC brake time, parameter 97
DC current ref., parameter 97
emergency devices 259
emergency select, parameter. 97
flux braking, parameter. 103
function, parameter 96
parameter group. 96
supervision
parameter group. 111
parameter low limit, parameters. 111
parameter selection, parameters 111
supply phase, fault code 242
switching frequency 265
switching frequency control, parameter 104
switching frequency derating 256
switching frequency, parameter 104
symmetrically grounded network 261
system controls, parameter group 86

T

temperature derating. 256
terminals
location diagram, R5/R6. 17
location diagram, R7/R8. 18
termination 154
test date, parameter 113
thermal fail, fault code. 242
timers
boost. 122
enable. 121
parameter group. 120
source. 123
start/stop time. 121
tools 10
torque
at fault, history parameter. 69
boost current, parameter 97
data parameter. 61
max. limit select, parameter 94
max. limit, parameter 95
min. limit select, parameter 94
min. limit, parameters. 95
triac, drive inputs. 272
trim mode (PID), parameter 133
trim scale (PID), parameter. 133
type code 8

U

UL/CSA markings 284
underload
curve, fault parameter 108
fault code 242
function, fault parameter 108
time, fault parameter 108
undervoltage
automatic reset, parameter 110
control enable, parameter 93
ungrounded network
see floating network
units (PID), parameter 126
unsymmetrically grounded networks 261
user parameter set
change control, parameter 87
download 38
U/f ratio, parameter 103

V

vibration
stress testing 282
virtual object, N2 186
VND 188
voltage
at fault, history parameter 69
rating code 9
voltage/frequency ratio, parameter 103

W

wake-up delay (PID), parameter 131
wake-up deviation (PID), parameter 131
warning
automatic start up 3, 24
dangerous voltages 3
floating networks 3
high temperatures 3
listing 3
parallel control connections 3
qualified installer 3
weight 278
wiring
fault, parameter 109
installation 18
overview 14
requirements 14

XYZ

zero speed load, fault parameter 107

ACH550-US-04
3AUA0000004092 Rev D / EN
EFFECTIVE: MAR. 10, 2005
SUPERSEDES: FEB. 16, 2005

ABB Oy
AC Drives
P.O. Box 184
FIN-00381 HELSINKI
FINLAND
Telephone +358 10 22 11
Telefax +358 10 22 22681
Internet http://www.abb.com

ABB Inc.
Automation Technologies
Drives & Machines
16250 West Glendale Drive
New Berlin, WI 53151
USA
Telephone +1 262 785-3200
+1 800 HELP-365
Telefax +1 262 780-5135
Internet http://www.abb-drives.com