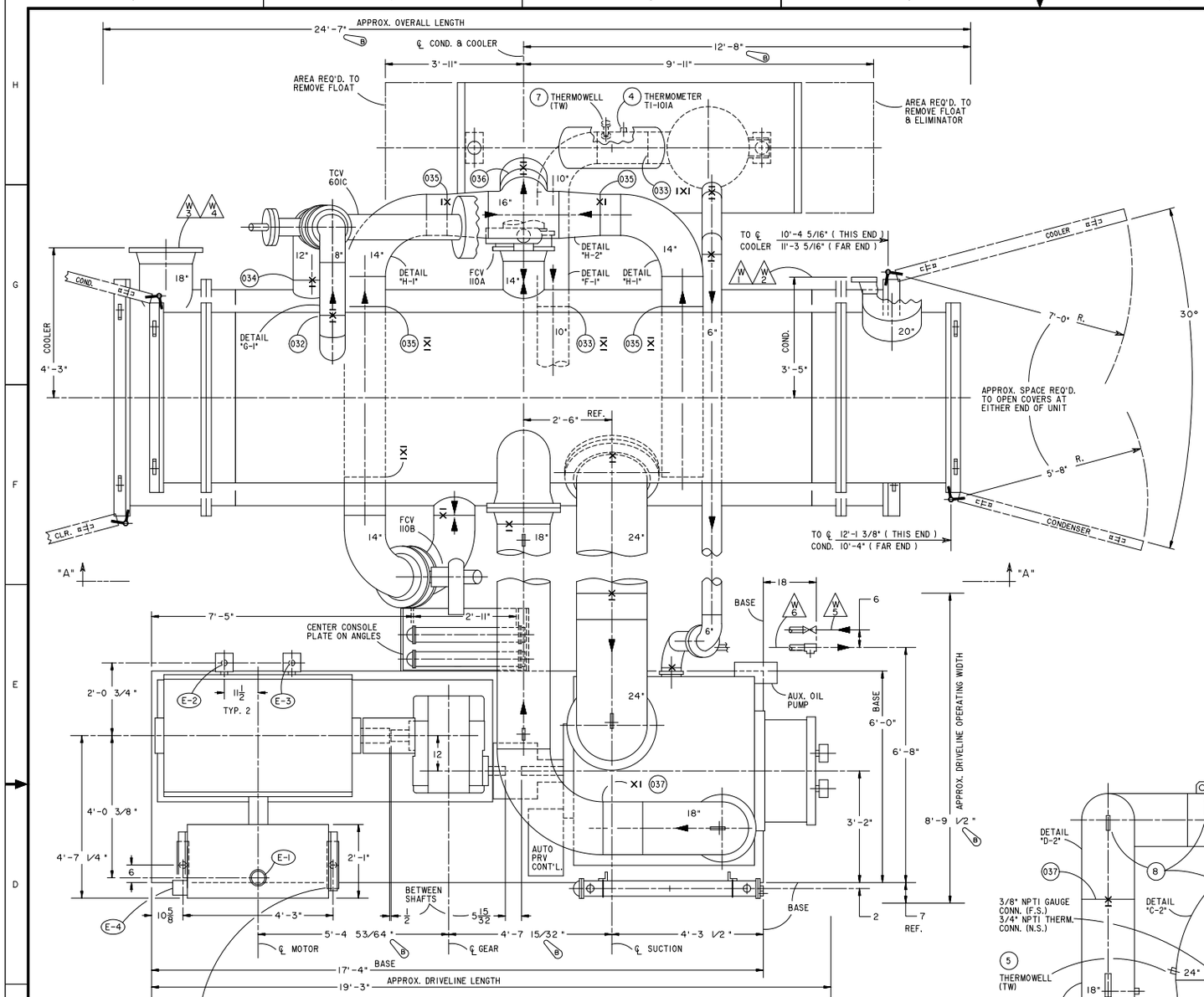

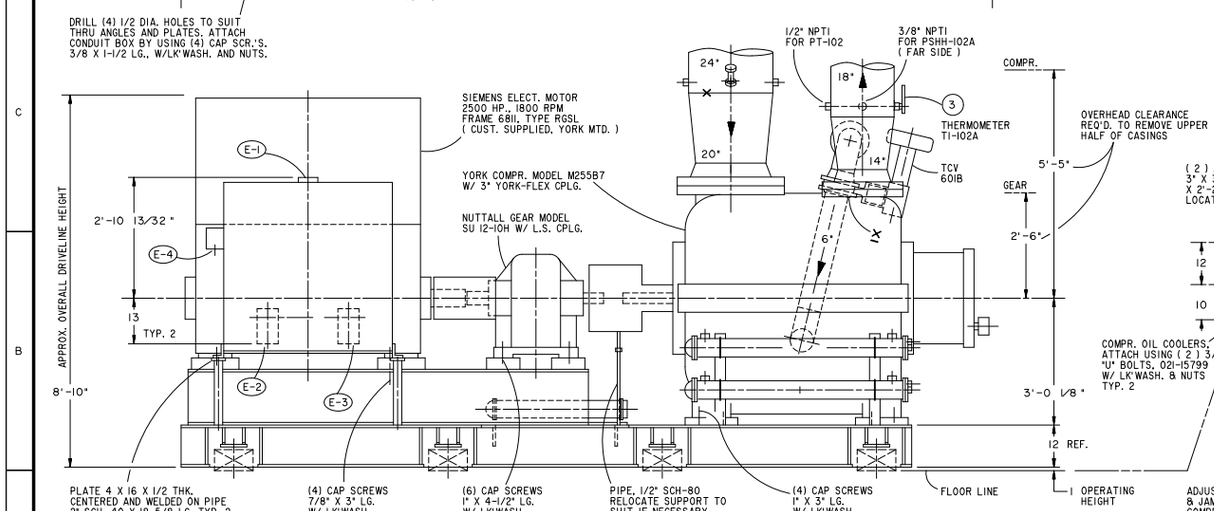

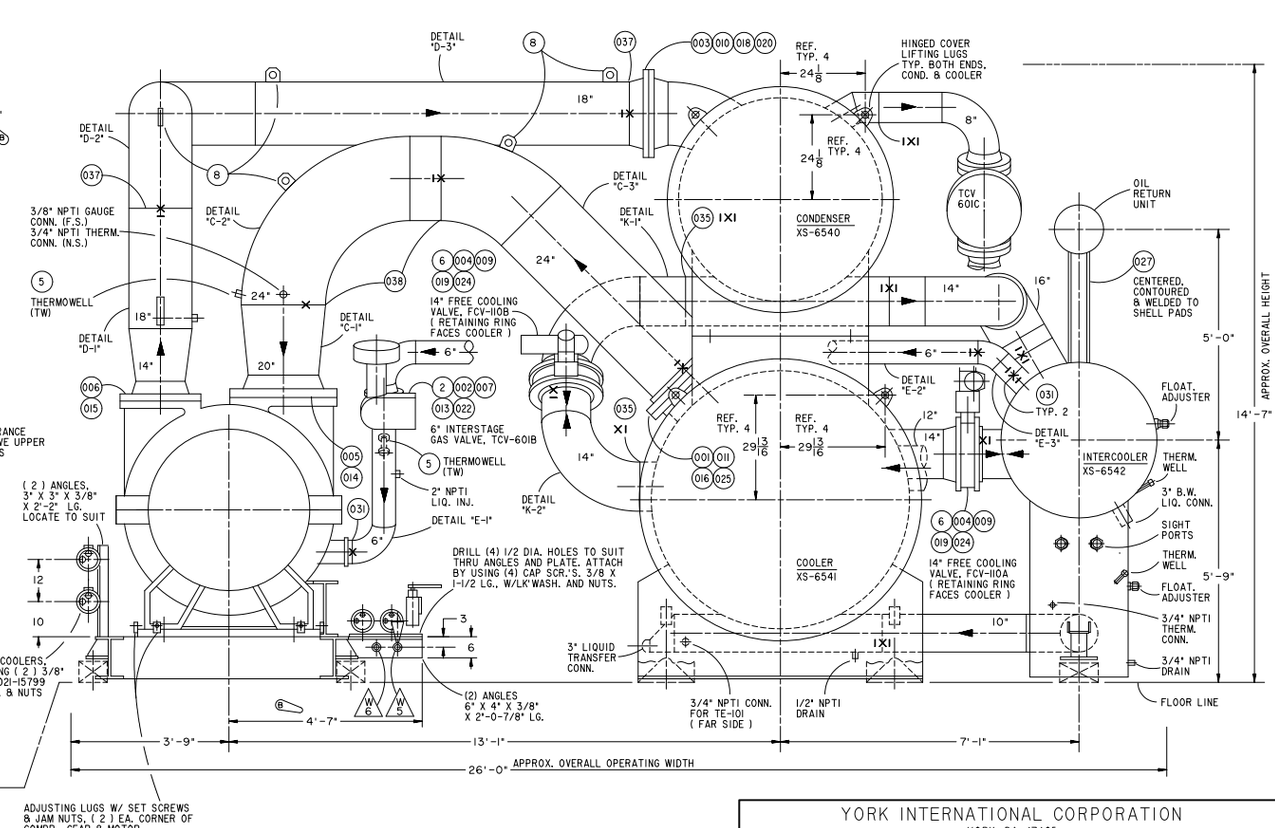

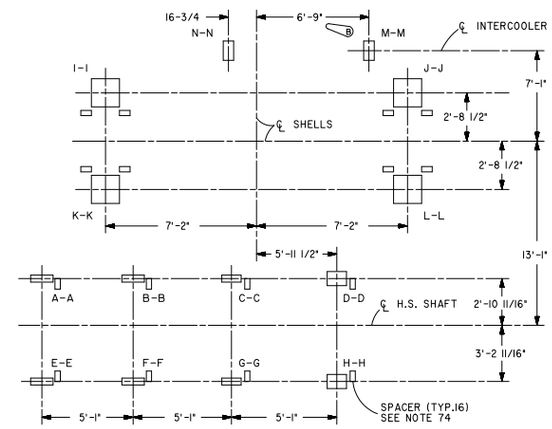

FLOOR LOADING PLAN

CUSTOMER CONNECTIONS

W1	20" - 150 LB. ANSI R.F. FLANGE CONDENSER WATER INLET
W2	20" - 150 LB. ANSI R.F. FLANGE CONDENSER WATER OUTLET
W3	18" - 150 LB. ANSI R.F. FLANGE COOLER WATER INLET
W4	18" - 150 LB. ANSI R.F. FLANGE COOLER WATER OUTLET
W5	1-1/2" NPTI OIL COOLER WATER INLET
W6	1-1/2" NPTI OIL COOLER WATER OUTLET
E-1	5" NPTI MAIN MOTOR CONDUIT CONN.
E-2	1-1/2" NPTI SPACE HEATER CONDUIT BOX CONN.
E-3	1-1/2" NPTI, STATOR & BEARING RTD CONDUIT BOX CONN.
E-4	1" NPTI CT SECONDARY CONDUIT BOX CONN.

ISOLATORS

ISOLATOR MFG.	LOCATION	LOADING	BASE PL. SIZE	MOUNTING
VIBRATION MOUNTINGS & CONTROLS	A-A	4215	12-1/2" X 4"	SYB-3-192A
	B-B	4886	12-1/2" X 4"	SYB-3-192B
	C-C	8796	11" X 8"	SYB-6-192B
	D-D	8125	11" X 8"	SYB-6-192A
	E-E	3135	12-1/2" X 4"	SYB-3-192
	F-F	3806	12-1/2" X 4"	SYB-3-192A
	G-G	8796	11" X 8"	SYB-6-192B
	H-H	8125	11" X 8"	SYB-6-192A
	I-I	31800	16" X 10"	SYBJ-2-198/199
	J-J	31800	16" X 10"	SYBJ-2-198/199
	K-K	31800	16" X 10"	SYBJ-2-198/199
	L-L	31800	16" X 10"	SYBJ-2-198/199
	M-M	5250	12-1/2" X 4"	SYB-3-192B
	N-N	5250	12-1/2" X 4"	SYB-3-192B

CERTIFIED FOR CONSTRUCTION
YORK
INTERNATIONAL CORP.
DATE_____ BY_____

CUSTOMER: E. I. DUPONT EXPERIMENTAL STATION WILMINGTON, DE.

CUST ORDER NO.: LWAC8906W

JOB NAME: E. I. DUPONT EXPERIMENTAL STATION WILMINGTON, DE.

YORK ORDER NO.: 90-813634

REV. LEV.	DATE	REVISION RECORD	CHG. NO.	DR.	CK.
A	12-3-90	COMPLETED FOR SHOP RELEASE. AT G-2, 5'-11 1/2" WAS 3'-5 1/2"	—	MEB	WDH
B	1-30-91	ADDED GEAR LUBE CONSOLE, 8'-9-1/2" WAS 8'-0" AT D-5. 4'-7-15/32" WAS 4'-7-17/32" AT D-6. 5'-4-53/64" WAS 5'-4-47/64" AT D-7. UPDATED MOTOR CONDUIT BOX. 24'-7" WAS 24'-11" AT H-7. 12'-8" WAS 12'-9" AT H-6. UPDATED DIM'S. TO CLR. BOX FLG. AT G-5. 6'-9" WAS 7'-0-1/4" AT H-3.	CS91-0097	WDH	MEB
C	2-19-91	ADDED SHELL CHAN. BOX COVER LIFTING LUGS. DRIVELINE COMPONENT ADJUSTING LUGS & CUSTOMER IDENTS. TO SHELLS. UPDATED MOTOR CONDUIT CONNS. COMPLETED ISOLATOR LOADING CHART	CS91-0198	MEB	MEB
D	4-22-91	SEE SHT. 2 FOR REV.	CS91-0405	MEB	MEB

"ALL PROPRIETARY RIGHTS IN THE SUBJECT MATTER HEREOF ARE RESERVED, AND NO PERMISSION IS GRANTED TO REPRODUCE THIS PRINT IN WHOLE OR IN PART, OR DISCLOSE ANY OF THE INFORMATION UPON IT TO OTHERS WITHOUT WRITTEN RELEASE BY YORK INTERNATIONAL CORPORATION".

YORK INTERNATIONAL CORPORATION
YORK, PA. 17405

DIMENSIONS ARE IN INCHES
DO NOT SCALE
TOLERANCES PER ENG. STD. M-282
WELDING PER ENG. STD. M-30
REF. DWG.

UNIT
TURBOMASTER
OM 3000
REFRIGERANT-134a

MATERIAL
TYPE_____ ENG. STD._____
PART NO._____
CUT SIZE_____

NAME	DATE
DR. M E BAUGHMAN	11-21-90
APPR. W.D.HOPKINS	12-3-90

SCALE: 3/4" = 12"

SIZE: E | CAGE NO: 66935 | DRAWING NUMBER: 076-73781-000

WT. = LBS. | ORIG. NO. 076-73781E | SHEET 1 OF 3

05-26-98 16:47

CS.90-813634.UNIT.076-73781E.SHT1