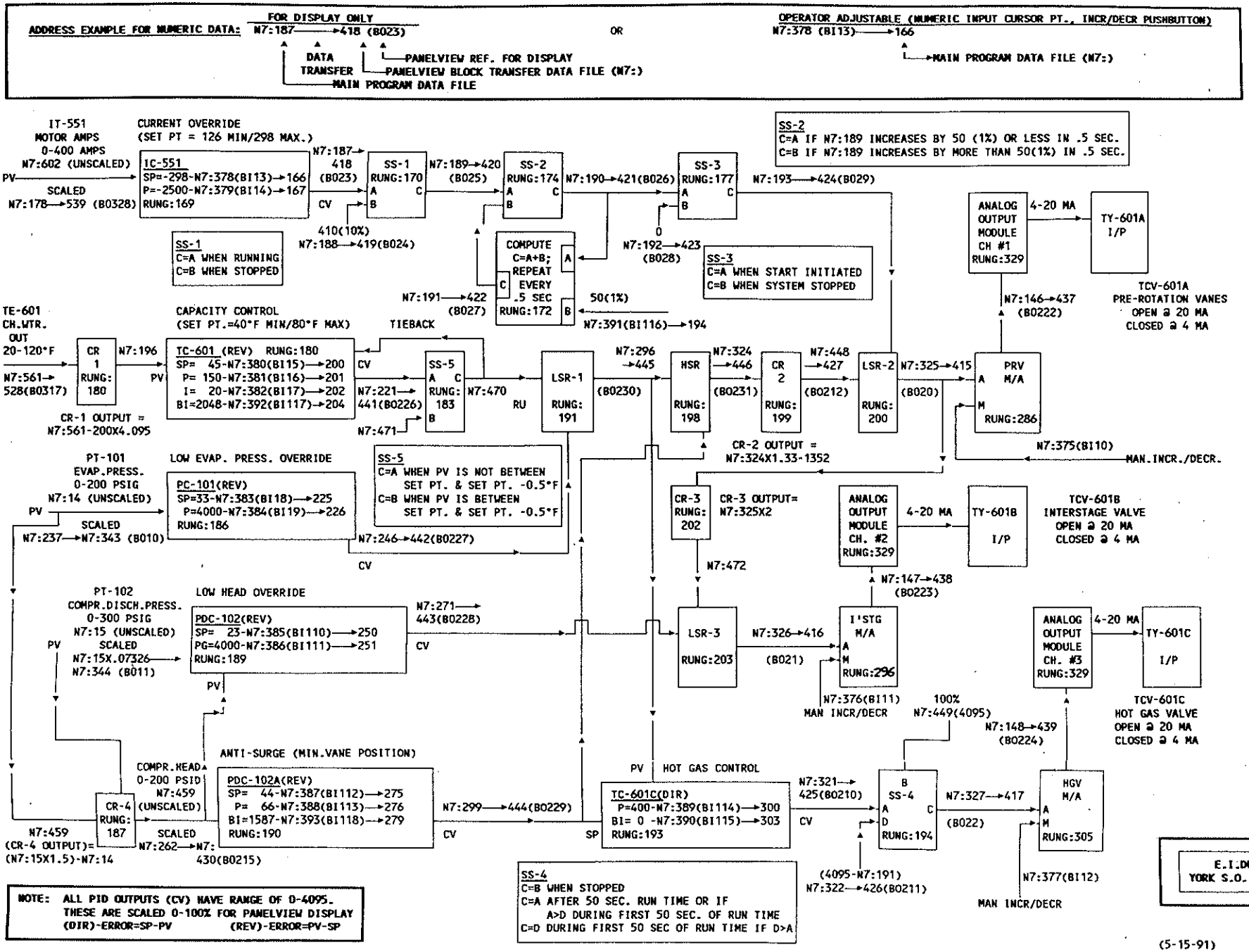CAPACITY CONTROL DIAGRAM